MELSEC FX Series

Programmable Logic Controllers

User's Manual
(Hardware Edition)

FX3G

01 11 2008
JY997D31301
Version A

Safety Precautions

(Read these precautions before using.)

Before installation, operation, maintenance or inspection of this product, thoroughly read through and understand this manual and the associated manuals. Also, take care to handle the module properly and safely.

This manual classifies the safety precautions into two categories: DANGER and CAUTION.

DANGER	Indicates that incorrect handling may cause hazardous conditions, resulting in death or severe injury.
CAUTION	Indicates that incorrect handling may cause hazardous conditions, resulting in medium or slight personal injury or physical damage.

Depending on the circumstances, procedures indicated by CAUTION may also cause severe injury. In any case, it is important to follow all usage directions. Store this manual in a safe place so that it can be taken out and read whenever necessary. Always forward it to the end user.

1. DESIGN PRECAUTIONS

DANGER	Reference
• Make sure to have the following safety circuits outside of the PLC to ensure safe system operation even during external power supply problems or PLC failure. Otherwise, malfunctions may cause serious accidents. 1) Most importantly, have the following: an emergency stop circuit, a protection circuit, an interlock circuit for opposite movements (such as normal vs. reverse rotation), and an interlock circuit (to prevent damage to the equipment at the upper and lower positioning limits). 2) Note that when the PLC CPU detects an error, such as a watchdog timer error, during self-diagnosis, all outputs are turned off. Also, when an error that cannot be detected by the PLC CPU occurs in an input/output control block, output control may be disabled. External circuits and mechanisms should be designed to ensure safe machinery operation in such a case. 3) Note that the output current of the 24V DC service power supply varies depending on the model and the absence/presence of extension blocks. If an overload occurs, the voltage automatically drops, inputs in the PLC are disabled, and all outputs are turned off. External circuits and mechanisms should be designed to ensure safe machinery operation in such a case. 4) Note that when an error occurs in a relay, triac or transistor output device, the output could be held either on or off. For output signals that may lead to serious accidents, external circuits and mechanisms should be designed to ensure safe machinery operation in such a case.	81 103 116 140 153 188 210 248 312

CAUTION	Reference
• Do not bundle the control line together with or lay it close to the main circuit or power line. As a guideline, lay the control line at least 100mm (3.94") or more away from the main circuit or power line. Noise may cause malfunctions. • Install module so that excessive force will not be applied to peripheral device connectors. Failure to do so may result in wire damage/breakage or PLC failure.	81 103 116 140 153 188 210 248 312

2. INSTALLATION PRECAUTIONS

DANGER	Reference
• Make sure to cut off all phases of the power supply externally before attempting installation or wiring work. Failure to do so may cause electric shock.	81 312

CAUTION	Reference
• Use the product within the generic environment specifications described in Section 4.1 of this manual. Never use the product in areas with excessive dust, oily smoke, conductive dusts, corrosive gas (salt air, Cl_2, H_2S, SO_2 or NO_2), flammable gas, vibration or impacts, or expose it to high temperature, condensation, or rain and wind. • Do not touch the conductive parts of the product directly. Doing so may cause device failures or malfunctions. • Do not touch the conductive parts of the product directly to avoid failure or malfunctions. • Install the product securely using a DIN rail or mounting screws. Terminal block: DIN rail only Main unit, FX2N Series I/O extension unit/block, and FX2N/FX3U Series special extension block/special adapter: DIN rail or direct mounting • Install the product on a flat surface. If the mounting surface is rough, undue force will be applied to the PC board, thereby causing nonconformities. • Make sure to affix the expansion board with tapping screws. Tightening torque: 0.3 to 0.6 N•m Loose connections may cause malfunctions. • When drilling screw holes or wiring, make sure that cutting and wiring debris do not enter the ventilation slits. Failure to do so may cause fire, equipment failures or malfunctions. • Be sure to remove the dust proof sheet from the PLC's ventilation port when installation work is completed. Failure to do so may cause fire, equipment failures or malfunctions. • Connect the extension cables, peripheral device cables, input/output cables and battery connecting cable securely to their designated connectors. Loose connections may cause malfunctions. • Connect the memory cassette, and expansion board board securely to their designated connectors. Loose connections may cause malfunctions. • Turn off the power to the PLC before attaching or detaching the following devices. Failure to do so may cause device failures or malfunctions. - Peripheral devices, expansion boards, and special adapters - Extension units/blocks and the FX Series terminal block - Battery and memory cassette • Connect the memory cassette securely to the appropriate connector. Loose connections may cause malfunctions. Installing the cassette in a raised or tilted posture can also cause malfunctions.	82 313

3. WIRING PRECAUTIONS

DANGER	Reference
• Connect the AC power supply to the dedicated terminals specified in this manual. If an AC power supply is connected to a DC input/output terminal or DC power supply terminal, the PLC will burn out. • Make sure to cut off all phases of the power supply externally before attempting installation or wiring work. Failure to do so may cause electric shock or damage to the product. • Make sure to attach the terminal cover, offered as an accessory, before turning on the power or initiating operation after installation or wiring work. Failure to do so may cause electric shock.	82 103 116 140 153 188 210 313

⚠CAUTION	Reference
• Do not supply power to the [24+] and [24V] terminals (24V DC service power supply) on the main unit or extension units. Doing so may cause damage to the product. • Perform class D grounding (grounding resistance: 100Ω or less) to the grounding terminal on the main unit and extension units with a wire 2 mm^2 or thicker. Do not use common grounding with heavy electrical systems (refer to Section 9.3). • Do not wire vacant terminals externally. Doing so may damage the product. • When drilling screw holes or wiring, make sure cutting or wire debris does not enter the ventilation slits. Failure to do so may cause fire, equipment failures or malfunctions. • Make sure to properly wire the FX2N/FX3U Series extension equipment in accordance with the following precautions. Failure to do so may cause electric shock, a short-circuit, wire breakage, or damage to the product. - The disposal size of the cable end should follow the dimensions described in this manual. - Tightening torque should be between 0.5 and 0.8 N•m. • Make sure to properly wire to the European terminal board in accordance with the following precautions. Failure to do so may cause electric shock, a short-circuit, wire breakage, or damage to the product. - The disposal size of the cable end should follow the dimensions described in this manual. - Tightening torque should be between 0.22 and 0.25 N•m. - Twist the end of strand wire and make sure that there are no loose wires. - Do not solder-plate the electric wire ends. - Do not connect more than the specified number of wires or electric wires of unspecified size. - Affix the electric wires so that neither the terminal block nor the connected parts are directly stressed. • Make sure to properly wire to the FX Series terminal blocks in accordance with the following precautions. Failure to do so may cause electric shock, a short-circuit, wire breakage, or damage to the product. - The disposal size of the cable end should follow the dimensions described in this manual. - Tightening torque should be between 0.5 and 0.8 N•m.	83 104 117 141 144 149 152 154 189 210 313 322

4. STARTUP AND MAINTENANCE PRECAUTIONS

⚠DANGER	Reference
• Do not touch any terminal while the PLC's power is on. Doing so may cause electric shock or malfunctions. • Before cleaning or retightening terminals, cut off all phases of the power supply externally. Failure to do so may cause electric shock. • Make sure to connect the battery for memory backup correctly. Do not charge, disassemble, heat, short-circuit, or expose the battery to fire. Doing so may rupture or ignite it. • Before modifying or disrupting the program in operation or running the PLC, carefully read through this manual and the associated manuals and ensure the safety of the operation. An operation error may damage the machinery or cause accidents. • Do not change the program in the PLC from two or more peripheral equipment devices at the same time. (i.e. from a programming tool and a GOT) Doing so may cause destruction or malfunction of the PLC program.	164 267 345

⚠CAUTION	Reference
• Turn off the power to the PLC before attaching or detaching the memory cassette. If the memory cassette is attached or detached while the PLC's power is on, the data in the memory may be destroyed, or the memory cassette may be damaged. • Do not disassemble or modify the PLC. Doing so may cause fire, equipment failures, or malfunctions. For repair, contact your local Mitsubishi Electric distributor. • Turn off the power to the PLC before connecting or disconnecting any extension cable. Failure to do so may cause equipment failures or malfunctions. • Turn off the power to the PLC before attaching or detaching the following devices. Failure to do so may cause equipment failures or malfunctions. - Peripheral devices, expansion boards, and special adapters - Extension units/blocks and FX Series terminal blocks - Battery and memory cassette	164 267 335 345

5. DISPOSAL PRECAUTIONS

⚠CAUTION	Reference
• Please contact a certified electronic waste disposal company for the environmentally safe recycling and disposal of your device.	164

6. TRANSPORTATION PRECAUTIONS

⚠CAUTION	Reference
• When transporting the FX3G Series PLC incorporating the optional battery, turn on the PLC before shipment, confirm that the battery mode is set using a parameter and the ALM LED is OFF, and check the battery life. If the PLC is transported with the ALM LED on or the battery exhausted, the battery-backed data may be unstable during transportation. • The PLC is a precision instrument. During transportation, avoid impacts larger than those specified in the general specifications (Section 4.1). Failure to do so may cause failures in the PLC. After transportation, verify the operations of the PLC.	164 345

FX3G Series Programmable Controllers

User's Manual [Hardware Edition]

Manual number	JY997D31301
Manual revision	A
Date	11/2008

Foreword

This manual contains text, diagrams and explanations which will guide the reader in the correct installation, safe use and operation of the FX3G Series Programmable Controllers and should be read and understood before attempting to install or use the unit.

And, store this manual in a safe place so that you can take it out and read it whenever necessary. Always forward it to the end user.

This manual confers no industrial property rights or any rights of any other kind, nor does it confer any patent licenses. Mitsubishi Electric Corporation cannot be held responsible for any problems involving industrial property rights which may occur as a result of using the contents noted in this manual.

© 2008 MITSUBISHI ELECTRIC CORPORATION

Outline Precautions

- This manual provides information for the use of the FX3G Series Programmable Controllers. The manual has been written to be used by trained and competent personnel. The definition of such a person or persons is as follows;
  1) Any engineer who is responsible for the planning, design and construction of automatic equipment using the product associated with this manual should be of a competent nature, trained and qualified to the local and national standards required to fulfill that role. These engineers should be fully aware of all aspects of safety with regards to automated equipment.
  2) Any commissioning or service engineer must be of a competent nature, trained and qualified to the local and national standards required to fulfill that job. These engineers should also be trained in the use and maintenance of the completed product. This includes being completely familiar with all associated documentation for the said product. All maintenance should be carried out in accordance with established safety practices.
  3) All operators of the completed equipment should be trained to use that product in a safe and coordinated manner in compliance to established safety practices. The operators should also be familiar with documentation which is connected with the actual operation of the completed equipment.

  Note: the term 'completed equipment' refers to a third party constructed device which contains or uses the product associated with this manual

- This product has been manufactured as a general-purpose part for general industries, and has not been designed or manufactured to be incorporated in a device or system used in purposes related to human life.
- Before using the product for special purposes such as nuclear power, electric power, aerospace, medicine or passenger movement vehicles, consult with Mitsubishi Electric.
- This product has been manufactured under strict quality control. However when installing the product where major accidents or losses could occur if the product fails, install appropriate backup or failsafe functions in the system.
- When combining this product with other products, please confirm the standard and the code, or regulations with which the user should follow. Moreover, please confirm the compatibility of this product to the system, machine, and apparatus with which a user is using.
- If in doubt at any stage during the installation of the product, always consult a professional electrical engineer who is qualified and trained to the local and national standards. If in doubt about the operation or use, please consult the nearest Mitsubishi Electric distributor.
- Since the examples indicated by this manual, technical bulletin, catalog, etc. are used as a reference, please use it after confirming the function and safety of the equipment and system. Mitsubishi Electric will accept no responsibility for actual use of the product based on these illustrative examples.
- This manual content, specification etc. may be changed without a notice for improvement.
- The information in this manual has been carefully checked and is believed to be accurate; however, if you have noticed a doubtful point, a doubtful error, etc., please contact the nearest Mitsubishi Electric distributor.

Registration

- Microsoft® and Windows® are either registered trademarks or trademarks of Microsoft Corporation in the United States and/or other countries.
- The company name and the product name to be described in this manual are the registered trademarks or trademarks of each company.

Table of Contents

SAFETY PRECAUTIONS ..... (1)

1. Introduction 14

1.1 Introduction of Manuals 14
1.1.1 Classification of major components in this manual 14
1.1.2 Manual organization and position of this manual 16
1.1.3 List of manuals 17
1.2 Generic Names and Abbreviations Used in Manuals 21

2. Features and Part Names 23

2.1 Major Features 23
2.2 Names and Functions of Parts 25
2.2.1 Front Panel 25
2.2.2 Sides 27

3. Introduction of Products 28

3.1 List of Products and Interpretation of Model Names 28
3.1.1 Main units 29
3.1.2 Input/output powered extension units 29
3.1.3 Input/output extension blocks 30
3.1.4 Special function blocks 31
3.1.5 Display module 31
3.1.6 Expansion boards 31
3.1.7 Connector conversion adapter 31
3.1.8 Special adapters 32
3.1.9 Extension power supply unit 32
3.1.10 Extension cables and connector conversion adapter/ Battery/Memory cassettes 32
3.1.11 FX Series terminal blocks (cables and connectors) 33
3.1.12 Remote I/O 33
3.1.13 Power supply unit 33
3.2 Connector Types and Cables for Program Communication 34
3.2.1 Programming tool 35
3.2.2 Communication cables 35
3.2.3 Converters and interface 35

4. Specifications, External Dimensions and Terminal Layout (Main Units) 36

4.1 Generic Specifications 36
4.1.1 Dielectric withstand voltage test and insulation resistance test 37
4.2 Power Supply Specifications 37
4.3 Input Specifications 38
4.3.1 24V DC Input (sink/source) 38
4.4 Output Specifications 39
4.4.1 Transistor output 39
4.5 Performance Specifications 40
4.6 External Dimensions (Weight/Accessories/Installation) 42
4.6.1 Main units 42
4.7 Terminal Layout 42
4.7.1 Interpretation of terminal block layout 42
4.7.2 FX3G-14MT/ES 43
4.7.3 FX3G-24MT/ES 43
4.7.4 FX3G-40MT/ES 43
4.7.5 FX3G-60MT/ES 43

5. Version Information and Peripheral Equipment Connectability 44

5.1 Version Information ... 44
5.1.1 Version check method ... 44
5.1.2 How to look at manufacturer's serial number ... 44
5.1.3 Version upgrade history ... 44
5.2 Programming Tool Applicability ... 45
5.2.1 Applicable versions of programming tool ... 45
5.2.2 In the case of programming tool (version) not applicable ... 45
5.2.3 Program transfer speed and programming tool ... 45
5.2.4 Cautions on connecting peripheral equipment by way of expansion board or special adapter. ... 46
5.2.5 Cautions on write during RUN ... 47
5.3 Precautions on Use of (Built-in USB) Programming Port ... 49
5.3.1 Installation of USB driver (GX Developer Ver. 8.72A or later) ... 49
5.3.2 Setting in GX Developer (Ver. 8.72A or later) ... 49
5.4 Cautions on using transparent function by way of USB in GOT1000 Series ... 50
5.5 Cautions on using transparent port (2-port) function of GOT-F900 Series ... 51
5.6 Other Peripheral Equipment Applicability ... 52
5.6.1 Other Peripheral Equipment Applicability ... 52

6. Examination of System Configuration 53

6.1 Configuration of a Whole System ... 53
6.1.1 Expansion board/connector conversion adapter/memory cassette/display module configuration ... 54
6.2 Rules of System Configuration ... 55
6.3 Number of Input/Output Points and Maximum Number of Input/Output Points ... 57
6.3.1 Calculation of number of input/output points ... 57
6.3.2 Maximum number of input/output points when CC-Link master is used ... 59
6.4 Number of Connected Extension Devices (Including Extension Cable) ... 60
6.4.1 Number of connectable expansion boards and special adapters ... 60
6.4.2 Input/output powered extension units ... 60
6.4.3 Extension Power Supply Unit ... 60
6.4.4 Special function blocks ... 60
6.4.5 Extension cable ... 60
6.5 Expansion of Main Unit ... 61
6.5.1 When adding input/output extension blocks using the 24V DC service power supply of the main unit ... 62
6.5.2 Selection example 1 using the 24V DC service power supply of the main unit ... 64
6.5.3 Selection example 2 using the 24V DC service power supply of the main unit ... 65
6.6 Expansion of FX2N Series I/O Powered Extension Unit ... 66
6.6.1 Quick reference matrix (when only input/output devices are added) ... 66
6.6.2 When special extension devices are also added (calculation of current consumption) ... 68
6.7 Expansion of Extension Power Supply Unit (FX3U-1PSU-5V) ... 70
6.8 Number of Input/Output (Occupied) Points and Current Consumption ... 72
6.8.1 [A] Main units ... 72
6.8.2 [B] Input/output powered extension units/blocks ... 72
6.8.3 [C] Special function devices ... 74
6.8.4 [D] Extension Power Supply Unit ... 74

7. Assignment of Input/Output Numbers and Unit Numbers 75

7.1 Assignment of Input/Output Numbers (X/Y) ... 75
7.1.1 Concept of assigning ... 75
7.1.2 Example of assigning ... 76
7.1.3 Application of I/O number label ... 76

7.2 Unit Numbers of Special Function Blocks 77
7.2.1 Concept of assigning 77
7.2.2 Example of assigning 77
7.2.3 Application of unit number labels 78
7.3 Assignment of Communication Channels 79
7.3.1 Assignment of communication channels 79
7.4 "Station No." Label of Expansion Board (FX3G-485-BD) 80
7.5 Trimmer Layout Label of Expansion Board (FX3G-8AV-BD) 80

8. Installation In Enclosure 81

8.1 Installation location 84
8.1.1 Installation location in enclosure 84
8.1.2 Spaces in enclosure 85
8.2 Layout in Enclosure 85
8.2.1 1-stage layout 85
8.2.2 2-stage layout 86
8.3 Examination for Installing Method in Enclosure 87
8.3.1 Installing methods 87
8.3.2 Cautions in examining installing method 87
8.3.3 Examples of installation 87
8.4 Procedures for Installing on and Detaching from DIN Rail 89
8.4.1 Preparation for installation 89
8.4.2 Installation of main unit 90
8.4.3 Installation of input/output powered extension unit/block and special function block 91
8.4.4 Removal of main unit 92
8.5 Procedures for Installing Directly (with M4 Screws) 93
8.5.1 Hole pitches for direct mounting 93
8.5.2 Example of mounting hole pitches 94
8.5.3 Installation of main unit 95
8.5.4 Installation of input/output powered extension unit/block and special function block 95
8.6 Connecting Methods for Main Unit and Extension Devices 96
8.6.1 Connection of extension devices 96
8.6.2 Connecting method A - connection of expansion board 97
8.6.3 Connecting method A - connection of connector conversion adapter 98
8.6.4 Connecting method C - connection of special adapter 100
8.6.5 Connecting method D - connection of powered extension units/blocks to main unit 100
8.6.6 Connecting method E - connection of powered extension units/blocks 101
8.6.7 Connecting method F - connection of extension cable and FX2N-CNV-BC 101
8.6.8 Connecting method G - connection of input/output powered extension unit 102
8.6.9 Connecting method H - connection of extension block to input/output powered extension unit 102

9. Preparation for Wiring and Power Supply Wiring Procedures 103

9.1 Preparation for Wiring 105
9.1.1 Wiring procedures 105
9.1.2 Removal and installation of quick-release terminal block 105
9.2 Cable Connecting Procedures 106
9.2.1 Input/output terminal block (power supply and input/output wiring) 106
9.2.2 Input/output connectors (FX2N input/output extension blocks) 108
9.2.3 Terminal block (for europe) [expansion board and special adapters] 109
9.3 Grounding 110
9.4 Examples of External Wiring 111
9.4.1 Example of input/output wiring with 24V DC service power supply 111
9.4.2 Example of sink input [-common] wiring 112
9.4.3 Example of source input [+common] wiring 113
9.4.4 An external wiring example for the extension power supply unit (sink input [-common]) 114
9.4.5 An external wiring example for the extension power supply unit (source input [+common]) 115

10. Input Wiring Procedures 116

10.1 Before Starting Input Wiring ... 118
10.1.1 Sink and source input ... 118
10.2 24V DC input (Sink and source input type) ... 119
10.2.1 Handling of 24V DC input ... 119
10.2.2 Instructions for connecting input devices ... 120
10.2.3 Examples of external wiring (sink input) ... 122
10.2.4 Examples of external wiring (source input) ... 124
10.3 100V AC Input ... 125
10.3.1 Input specifications ... 125
10.3.2 Handling of 100V AC Input ... 125
10.3.3 Examples of external wiring (100V AC input) ... 126
10.4 Input Interruption (I00□ to I50□) ... 127
10.4.1 Allocation of pointers to input numbers (input signal ON/OFF duration) ... 127
10.4.2 Cautions for input interruption ... 127
10.5 Pulse Catch (M8170 to M8175) ... 128
10.5.1 Allocation of special memories to input numbers (ON duration of input signals) ... 128
10.5.2 Cautions for pulse catch ... 128
10.6 Pulse width/Pulse period measurement function (Supported in Ver. 1.10 or later) ... 129
10.6.1 Allocation of special memories to input numbers ... 129
10.6.2 Cautions for pulse width/period measurement function ... 129

11. Use of High-speed Counters 130

11.1 Outline ... 130
11.2 Types of Counting and Operations ... 130
11.2.1 Types and input signal forms ... 130
11.2.2 High-speed counter device notations ... 130
11.2.3 Cautions in connecting mating device ... 130
11.3 List of Device Numbers and Functions ... 131
11.4 Allocation of Device Numbers to Input Numbers ... 132
11.4.1 Allocation table ... 132
11.4.2 Restriction of redundant use of input numbers ... 132
11.5 Handling of High-speed Counters ... 133
11.5.1 1-phase 1-count input ... 133
11.5.2 1-phase 2-count input ... 134
11.5.3 2-phase 2-count input ... 135
11.6 Timing of Updating of Current Value and Comparison of Current Value ... 136
11.6.1 Timing of updating of current value ... 136
11.6.2 Comparison of current value ... 136
11.7 Response Frequency and Overall Frequency ... 137
11.8 Related Devices and Function Switching Procedures ... 138
11.8.1 Related devices ... 138
11.8.2 [Function switching] switching of allocation and functions of input terminals ... 139

12. Output Wiring Procedures 140

12.1 External Wiring for Relay Output Type ... 142
12.1.1 Product life of relay contacts ... 142
12.1.2 Handling of relay output ... 142
12.1.3 External wiring precautions ... 143
12.1.4 Example of external wiring ... 144
12.2 External Wiring of Transistor Output (Sink/Source) Type ... 145
12.2.1 Transistor Output Sink and Source ... 145
12.2.2 Handling of transistor output ... 146
12.2.3 External wiring precautions ... 148
12.2.4 Example of external wiring ... 149

12.3 External Wiring for Triac (SSR) Output Type 150
12.3.1 Handling of triac output 150
12.3.2 External wiring precautions 151
12.3.3 Example of external wiring 152

13. Examples of Wiring for Various Uses 153

13.1 Notes about Examples of Wiring 154
13.2 Digital Switch [DSW Instructions (FNC72)/BIN Instructions (FNC19)] 155
13.2.1 When DSW instructions are used 155
13.2.2 When BIN instructions are used 157
13.3 Input Matrix [MTR Instructions (FNC 52)] 158
13.4 Seven Segment with Latch [SEGL Instructions (FNC74)/BCD Instructions (FNC18)] 160
13.4.1 When SEGL instructions are used 160
13.4.2 When BCD instructions are used 162

14. Test Operation, Adjustment, Maintenance and Troubleshooting 164

14.1 Preparation for Test Operation 165
14.1.1 Preliminary inspection [power OFF] 165
14.1.2 Connection to built-in programming connector (RS-422) 165
14.1.3 Connection to built-in programming connector (USB) 166
14.1.4 Writing of program and program check [power ON and PLC stopped] 167
14.2 Running and Stopping Procedures [Power ON] 168
14.2.1 Methods of running and stopping 168
14.2.2 Use of several running/stopping methods 169
14.3 Operation and Test [Power ON and PLC Running] 170
14.3.1 Self-diagnostic function 170
14.3.2 Test functions 170
14.3.3 Program modification function 170
14.3.4 Built-in variable analog potentiometer function 171
14.4 Maintenance and Periodic Inspection 172
14.4.1 Procedures for checking model name 172
14.4.2 Periodic inspection - battery life, etc. 172
14.4.3 Maintenance - product life of relay contacts 173
14.5 Troubleshooting with LEDs 175
14.5.1 POW LED [on/flashing/off] 175
14.5.2 ALM LED [on/off] 175
14.5.3 ERR LED [on/flashing/off] 176
14.6 Judgment by Error Codes and Representation of Error Codes 177
14.6.1 Operation and check by GX Developer 177
14.6.2 Operation and check on display module (FX3G-5DM) 178
14.6.3 Representation of errors 179
14.6.4 Error Code List and Action 180
14.7 Troubleshooting 186
14.7.1 Output does not operate (main unit and input/output extension blocks) 186
14.7.2 24V DC input does not operate (main unit and input/output extension blocks) 186
14.7.3 Cautions in registering keyword 187

15. Input/Output Powered Extension Units 188

15.1 Outline 190
15.1.1 Product configuration 190
15.1.2 Product list 190
15.2 Power supply specifications 191
15.2.1 Weight, accessories, etc. 191
15.2.2 Part names 192

15.3 FX2N-32ER-ES/UL, FX2N-48ER-ES/UL 194
15.3.1 Product specifications 194
15.3.2 External dimensions 196
15.3.3 Terminal layout 196
15.4 FX2N-32ET-ESS/UL, FX2N-48ET-ESS/UL 197
15.4.1 Product specifications 197
15.4.2 External dimensions 199
15.4.3 Terminal layout 199
15.5 FX2N-32ER, FX2N-48ER 200
15.5.1 Product specifications 200
15.5.2 External dimensions 202
15.5.3 Terminal layout 202
15.6 FX2N-32ET, FX2N-48ET 203
15.6.1 Product specifications 203
15.6.2 External dimensions 205
15.6.3 Terminal layout 205
15.7 FX2N-32ES 206
15.7.1 Product specifications 206
15.7.2 External dimensions 207
15.7.3 Terminal layout 207
15.8 FX2N-48ER-UA1/UL 208
15.8.1 Product specifications 208
15.8.2 External dimensions 209
15.8.3 Terminal layout 209

16. Input/Output Extension Blocks 210

16.1 Outline 211
16.1.1 Product configuration 211
16.1.2 Product list 211
16.2 FX2N-8ER-ES/UL (24V DC Sink/Source Input, Relay Output) 213
16.2.1 Product specifications 213
16.2.2 Parts identification and terminal arrangement 214
16.2.3 External dimensions 215
16.3 FX2N-8ER (24V DC Sink Input, Relay Output) 216
16.3.1 Product specifications 216
16.3.2 Parts identification and terminal arrangement 217
16.3.3 External dimensions 218
16.4 FX2N-8EX-ES/UL, FX2N-16EX-ES/UL (24V DC Sink/Source Input) 219
16.4.1 Product specifications 219
16.4.2 Parts identification and terminal arrangement 220
16.4.3 External dimensions 221
16.5 FX2N-8EX, FX2N-16EX and FX2N-16EX-C 222
16.5.1 Product specifications 222
16.5.2 Parts identification and terminal arrangement 223
16.5.3 External dimensions 224
16.6 FX2N-16EXL-C (5V DC Input: 16 Points) 226
16.6.1 Product specifications 226
16.6.2 Parts identification and terminal arrangement 227
16.6.3 External dimensions 227
16.6.4 Example of wiring 227
16.7 FX2N-8EX-UA1/UL (100V AC Input) 229
16.7.1 Product specifications 229
16.7.2 Parts identification and terminal arrangement 230
16.7.3 External dimensions 230
16.8 FX2N-8EYR-ES/UL, FX2N-16EYR-ES/UL (Relay Output) 231
16.8.1 Product specifications 231
16.8.2 Parts identification and terminal arrangement 232
16.8.3 External dimensions 233
16.9 FX2N-8EYT-ESS/UL, FX2N-16EYT-ESS/UL (Transistor Output) 234
16.9.1 Product specifications 234
16.9.2 Parts identification and terminal arrangement 235
16.9.3 External dimensions 236

16.10 FX2N-8EYR, FX2N-16EYR (Relay Output) 237
16.10.1 Product specifications 237
16.10.2 Parts identification and terminal arrangement 238
16.10.3 External dimensions 239
16.11 FX2N-8EYT, FX2N-16EYT, FX2N-16EYT-C (Transistor Output) 240
16.11.1 Product specifications 240
16.11.2 Parts identification and terminal arrangement 241
16.11.3 External dimensions 242
16.12 FX2N-8EYT-H (Transistor Output) 244
16.12.1 Product specifications 244
16.12.2 Parts identification and terminal arrangement 245
16.12.3 External dimensions 245
16.13 FX2N-16EYS (Triac Output: 16 Points) 246
16.13.1 Product specifications 246
16.13.2 Parts identification and terminal arrangement 247
16.13.3 External dimensions 247

17. Extension Power Supply Unit 248

17.1 Outline 248
17.2 Specifications 249
17.2.1 Generic Specifications 249
17.2.2 Performance Specifications 249
17.2.3 External Dimensions 249
17.3 Extension Power Supply Unit Related Precaution 250

18. Other Extension Devices and Optional Units (External Dimensions and Terminal Arrangement) 251

18.1 Special Function Units/Blocks 251
18.1.1 FX2N-2AD 251
18.1.2 FX2N-2DA 251
18.1.3 FX3U-4AD 252
18.1.4 FX3U-4DA 252
18.1.5 FX2N-4AD 253
18.1.6 FX2N-4DA 253
18.1.7 FX2N-4AD-PT 254
18.1.8 FX2N-4AD-TC 254
18.1.9 FX2N-5A 255
18.1.10 FX2N-2LC 255
18.1.11 FX2N-8AD 256
18.1.12 FX2N-16CCL-M 256
18.1.13 FX2N-32CCL 257
18.1.14 FX3U-64CCL 257
18.1.15 FX2N-64CL-M 258
18.2 Special Adapters 259
18.2.1 FX3U-4AD-ADP 259
18.2.2 FX3U-4DA-ADP 259
18.2.3 FX3U-4AD-PT(W)-ADP 259
18.2.4 FX3U-4AD-PNK-ADP 260
18.2.5 FX3U-4AD-TC-ADP 260
18.2.6 FX3U-232ADP(-MB) 261
18.2.7 FX3U-485ADP(-MB) 261
18.3 Expansion Board 262
18.3.1 FX3G-232-BD 262
18.3.2 FX3G-422-BD 262
18.3.3 FX3G-485-BD 263
18.3.4 FX3G-2AD-BD 263
18.3.5 FX3G-1DA-BD 264
18.3.6 FX3G-8AV-BD 264

18.4 Power Supply 265
18.4.1 FX2N-20PSU 265
18.5 Connector Conversion Adapter 265
18.5.1 FX3G-CNV-ADP 265
18.5.2 FX2N-CNV-BC 266
18.6 Interface Module 266
18.6.1 FX-232AWC-H 266

19. Display Module(FX3G-5DM) 267

19.1 Specifications 267
19.1.1 Applicable PLC 267
19.1.2 Display/switch specifications 267
19.1.3 Part Names 268
19.1.4 External Dimensions 268
19.2 Installation and Removal 269
19.2.1 Installation (when the expansion board/connector conversion adapter is not used together) 269
19.2.2 Installation (when the expansion board/connector conversion adapter is used together) 270
19.3 Summary of Functions 271
19.4 Procedure for Accessing the Menu Screen from the Title Screen 272
19.4.1 Title screen 272
19.4.2 Top screen (time display) 272
19.4.3 Menu screen 272
19.5 Menu Structure 273
19.6 Monitor/Test Mode 275
19.6.1 Relevant devices 275
19.6.2 Monitor mode operation 276
19.6.3 Monitor screen and status display 277
19.6.4 Test mode operation 279
19.6.5 Test mode operation notes 282
19.7 Error Check 282
19.8 LANGUAGE (Menu Display Language Setting) 283
19.8.1 Changing to Japanese menus 283
19.8.2 Changing to English menus 284
19.8.3 D8302 changes by program and related devices 284
19.9 Contrast 285
19.10 Clock Menu (Current Time Setting) 286
19.10.1 Clock setting procedure 286
19.10.2 Displaying the current time 287
19.10.3 Changing the current time's "Year" from 2-digit format to 4-digit format 287
19.11 Keyword 288
19.11.1 Keyword types and levels 288
19.11.2 Level-specific restrictions screen list 288
19.11.3 Keyword storage 289
19.11.4 Screens requiring keyword for access 289
19.11.5 Canceling a keyword 290
19.11.6 Enabling a keyword 291
19.12 Memory Cassette Transfers 292
19.12.1 Transfer from internal EEPROM to memory cassette (Cassette <- PLC) 292
19.12.2 Transfer from memory cassette to internal EEPROM (Cassette -> PLC) 293
19.13 System Information (Restrictions From PLC) 295
19.13.1 System information list 295
19.13.2 System information setting program example 295

19.14 Specified Device Monitor Function 296
19.14.1 System information - specified device monitor function 296
19.14.2 Differences between specified device monitor screen and monitor/test screen 297
19.14.3 Program example1 (when monitoring/testing a timer) 297
19.14.4 Program example2 (when monitoring consecutive timers using operation keys) 298
19.14.5 Program example3 (when monitoring non-consecutive timers using operation keys) 299
19.14.6 Monitor operation on specified device monitor screen 300
19.14.7 Specified device monitor screen for monitoring 300
19.14.8 Test operation on specified device monitor screen 301
19.15 Screen saver function 302
19.15.1 System information - Screen saver function 302
19.15.2 Screen saver display 302
19.15.3 Program example (screen saver time setting) 302
19.16 Display Screen Protect Function 303
19.16.1 System information - display screen protect function 303
19.16.2 Program example (screen protect function setting) 303
19.16.3 Keyword and display screen protect function levels and corresponding restrictions 304
19.16.4 Relationship between keyword and display screen protect function 304
19.16.5 Keyword levels 305
19.16.6 Relationship between specified device monitor function and display screen protect function 305
19.16.7 Pointers for using the display screen protect function 306
19.17 Operation Button ON/OFF Information 307
19.17.1 Various applications 307
19.17.2 System information - operation button ON/OFF information 307
19.18 Specifying a Hexadecimal Current Value Display Format 308
19.18.1 System information - specifying a hexadecimal current value display format 308
19.18.2 Program example 1 (specifying a hexadecimal data display format) 308
19.18.3 Program example 2 (specifying a decadal data display format) 308
19.19 Operation Error Messages and Corrective Actions 309
19.19.1 When a "Fatal error occurred" message appears 310
19.20 Menu Display Characters - Japanese and English Display Character Correspondence Table 311

20. Terminal Block 312

20.1 Outline 314
20.1.1 Product configuration 315
20.2 External Dimensions and Component Names 316
20.3 Terminal Layout 317
20.4 Installation Work 319
20.4.1 Installation 319
20.4.2 Removal 319
20.4.3 Input/output cable connection 319
20.4.4 Connection to terminal block 320
20.5 FX-16E-TB, FX-32E-TB 321
20.5.1 Internal circuit 321
20.5.2 Example of input external wiring 322
20.5.3 Output external wiring 322
20.6 FX-16EX-A1-TB 323
20.6.1 Specifications 323
20.6.2 Internal circuit 324
20.6.3 Example of input external wiring 324
20.7 FX-16EYR-TB 325
20.7.1 Specifications 325
20.7.2 Internal circuit 326
20.7.3 Example of output external wiring 326
20.7.4 External wiring precautions 327
20.7.5 Product life of relay contacts 328

20.8 FX-16EYT-TB, FX-16EYT-H-TB 329
20.8.1 Specifications 329
20.8.2 Internal circuit 330
20.8.3 Example of output external wiring 330
20.8.4 External wiring precautions 331
20.9 FX-16EYS-TB 332
20.9.1 Specifications 332
20.9.2 Internal circuit 333
20.9.3 Example of output external wiring 333
20.9.4 External wiring precautions 334

21. Memory Cassette 335

21.1 Outline 335
21.2 Specifications 335
21.2.1 Electrical specifications 335
21.2.2 Part names and External dimensions 335
21.3 Installation 336
21.3.1 Installation (when the expansion board/connector conversion adapter is not used together) 336
21.3.2 Installation (when the expansion board/connector conversion adapter is used together) 337
21.4 Removal 339
21.4.1 Removal (when the expansion board/connector conversion adapter are not used together) 339
21.4.2 Removal (when the expansion board/connector conversion adapter are used together) 340
21.5 Saved Data Content 341
21.6 PROTECT Switch 342
21.6.1 PROTECT switch setting 342
21.6.2 PROTECT switch operation 342
21.6.3 Precautions when setting and using the switch 342
21.7 Memory Cassette <-> PLC (EEPROM Memory) Transfers by Loader Function 343
21.7.1 Writing (WR: 32L -> PLC) 343
21.7.2 Reading (RD: 32L <- PLC) 344
21.8 Operation Precautions 344

22. Battery 345

22.1 Battery Purpose 345
22.2 Specifications 345
22.3 Setting for Battery 346
22.3.1 Attaching the battery 346
22.3.2 Setting the battery mode (GX Developer Ver. 8.72A or later) 346
22.4 Battery Handling 347
22.4.1 Battery life and replacement guidelines 347
22.4.2 Reading the date of manufacture 347
22.4.3 Special "battery low-voltage" device & notification program example 347
22.5 Battery Replacement 348
22.6 Battery Related Precautions 348

Appendix A: Special Device List 349

Appendix A-1 Special Auxiliary Relay (M8000 to M8511) 349
Appendix A-2 Special Data Register (D8000 to D8511) 356
Appendix A-3 Analog expansion boards[M8260 to M8279 and D8260 to D8279] 362
Appendix A-3-1 Special auxiliary relays (M8260 to M8279) 362
Appendix A-3-2 Special data registers (D8260 to D8279) 363
Appendix A-4 Analog special adapters[M8280 to M8299 and D8280 to D8299] 364
Appendix A-4-1 Special auxiliary relays (M8280 to M8299) 364
Appendix A-4-2 Special data registers (D8280 to D8299) 366

Appendix B: Instruction List 368

Appendix B-1 Basic Instructions 368
Appendix B-2 Step Ladder Instructions 368
Appendix B-3 Applied Instructions ... in Ascending Order of FNC Number 369

Warranty 373

Revised History 374

1. Introduction

This manual explains the procedures for selecting the system components, main unit specifications and procedures for installing the main unit, specifications for the input/output powered extension units/blocks, and procedures for adding input/output devices, and procedures for operating the display module etc.
FX3G PLCs can make various kinds of control in combination with the main unit functions and many extension devices (expansion board, special adapters and special function blocks).
The detailed explanation of the sequence instructions, communication control, analog control and positioning control are given in separate manuals.

→ **For information on manual organization, refer to Subsection 1.1.2.**

1.1 Introduction of Manuals

1.1.1 Classification of major components in this manual

1) Main unit (Chapter 1 to Chapter 14)

Division	Outline	Reference
Introduction of manuals	This chapter contains explanations of the procedures for obtaining the manuals and the abbreviations.	Chapter 1
Features and part names	This chapter contains explanations of the product features and the names and functions of the parts.	Chapter 2
Introduction of product	This chapter contains explanations of the structures for model names, extension products.	Chapter 3
Specifications	This chapter contains explanations of the specifications for power supply and input/output, external dimensions and terminal block layout.	Chapter 4
Version information	This chapter contains explanation for upgrading of FX3G PLCs and information for the application of programming tools.	Chapter 5
System configuration	Procedure for determining whether or not a system configuration is possible. Extension device current consumption and configuration examples.	Chapter 6
Input/output No. and unit No. assignment	Input/output assignment procedure for input/output powered extension units/ blocks, etc., and unit No. assignment procedure for special function blocks.	Chapter 7
Installation	This chapter contains explanations for the panel layout and the procedures for installing with DIN rail or screws and how to connect extension devices.	Chapter 8
Power supply wiring	This chapter contains explanations of the procedures for preparing for wiring, power supply specifications and instructions for wiring.	Chapter 9
Input wiring	This chapter contains explanations of the input specifications and instructions for wiring.	Chapter 10
High-speed counter	This chapter contains explanations of the procedures for using the high-speed counter examples of programming.	Chapter 11
Output wiring	This chapter contains explanations for the output specifications and instructions for wiring.	Chapter 12
Examples of wiring for each use	This chapter contains explanations of the procedures for wiring input/output devices for main uses.	Chapter 13
Test operation, adjustment, maintenance and error check	This chapter contains explanations of the procedures for test operation and adjustment, maintenance and error check items and measures to be taken upon occurrence of error.	Chapter 14

2) Extension devices (Chapter 15 to Chapter 18)

Division	Outline	Reference
Input/output powered extension units	This chapter contains explanations for the input/output specifications, external dimensions and terminal layout for each product.	Chapter 15
Input/output extension blocks		Chapter 16
Extension power supply unit (FX3U-1PSU-5V)	This chapter contains explanations of specifications for the extension power supply unit and external dimensions.	Chapter 17
Extension products for special functions, such as analog control and communication	This chapter contains explanations for the external dimensions and terminal layout (For details, refer to the manual for each extension device).	Chapter 18

3) Optional products (Chapter 19 to Chapter 22)

Division	Outline	Reference
Display module	This chapter contains explanation of the specifications, external dimensions, mounting procedures and operating procedures for display modules(FX3G-5DM).	Chapter 19
FX Series terminal blocks	This chapter contains explanations of the procedures for wiring FX-16/32E□-TB.	Chapter 20
Memory cassette	This chapter contains explanations of the specifications for the memory cassette and the installation procedures.	Chapter 21
Battery	This chapter contains explanations of the procedures for replacing the battery and detecting battery voltage drop.	Chapter 22

4) Others (Appendix A to Appendix B)

Division	Outline	Reference
List of special devices	This chapter contains an explanation list of the special auxiliary relays (M8000 to M8511) and special data registers (D8000 to D8511) (For details, refer to the programming manual.)	Appendix A
List of instructions	This chapter contains an explanation list of the basic instructions and applied instructions (For details, refer to the programming manual.)	Appendix B

1.1.2 Manual organization and position of this manual

This manual describes detail on the hardware, including the system configuration, selection, installation and wiring. The instructions, communication control, analog control and positioning control are explained in separate manuals. Refer to the manuals as needed.

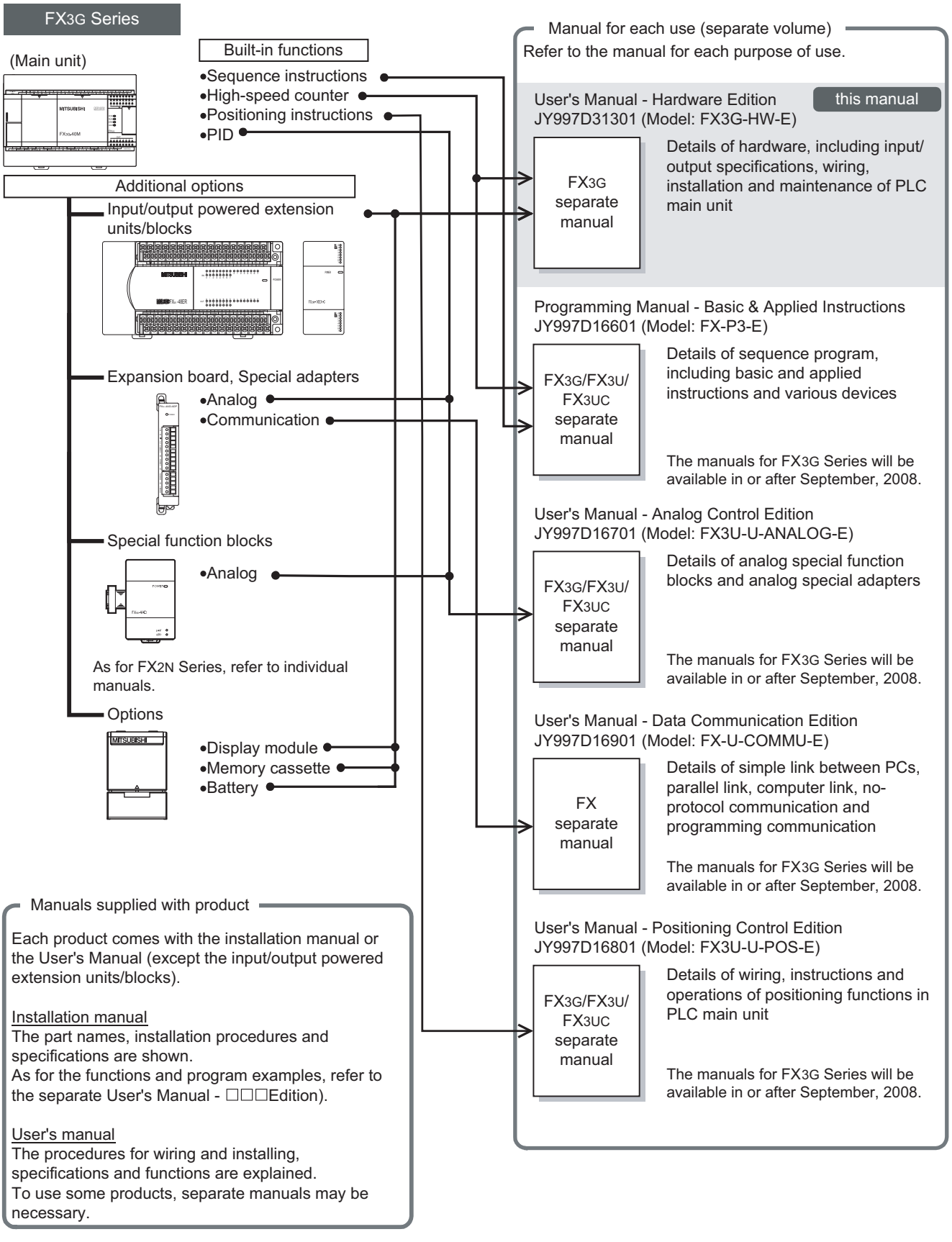

1.1.3 List of manuals

FX3G Series PLC main units supplied only with the hardware manual.
For the details of the hardware of FX3G Series, refer to this manual.
For instructions for programming and hardware information on special function devices, refer to the relevant manuals.

⊙: Indispensable manuals
✓: Manuals necessary for some purposes
△: Manuals with separate volumes for details

		Manual title	Manual number	Contents	Model name code
Manuals for PLC main unit					
■FX3G PLC main unit					
△	Supplied with product	FX3G Series HARDWARE MANUAL	JY997D33401	Extractions of descriptions of input/output specifications, wiring and installation of FX3G Series PLC main unit from FX3G Series User's Manual - Hardware Edition For the detailed explanation, refer to this manual.	-
⊙	Separate volume	FX3G Series User's Manual - Hardware Edition (this manual)	JY997D31301	Details of hardware of FX3G Series PLC main unit, including input/output specifications, wiring, installation and maintenance	09R521
■Programming					
⊙	Separate volume	FX3G/FX3U/FX3UC Series Programming Manual - Basic & Applied Instruction Edition	JY997D16601	Details of sequence programming for FX3G Series, including explanation for basic instructions, applied instructions and various devices	09R517
■FX Series terminal block					
✓	Supplied with product	FX INPUT AND OUTPUT TERMINAL BLOCKS USER'S GUIDE	JY992D50401	Procedures for handling FX Series terminal block	-
Manuals for communication control					
■Common					
✓	Separate volume	FX Series User's Manual - Data Communication Edition	JY997D16901	Details of simple link between PCs, parallel link, computer link and no-protocol communication (RS instructions, FX2N-232IF)	09R715
■RS-232C/RS-422/RS-485 communication When using each product, refer also to the User's Manual - Hardware Edition for the PLC main unit to be installed.					
△	Supplied with product	FX3G-232-BD Installation Manual	JY997D32001	Procedures for handling the RS-232C communication expansion board When using, refer also to FX Series User's Manual - Data Communication Edition.	-
△	Supplied with product	FX3U-232ADP-MB Installation Manual	JY997D26401	Procedures for handling the RS-232C communication special adapter When using, refer also to FX Series User's Manual - Data Communication Edition.	-
△	Supplied with product	FX3U-232ADP Installation Manual	JY997D13701	Procedures for handling the RS-232C communication special adapter When using, refer also to FX Series User's Manual - Data Communication Edition.	-
△	Supplied with product	FX3G-422-BD Installation Manual	JY997D32101	Procedures for handling the RS-422 communication expansion board When using, refer also to FX Series User's Manual - Data Communication Edition.	-
△	Supplied with product	FX3G-485-BD Installation Manual	JY997D32201	Procedures for handling the RS-485 communication expansion board When using, refer also to FX Series User's Manual - Data Communication Edition.	-
△	Supplied with product	FX3U-485ADP-MB Installation Manual	JY997D26301	Procedures for handling the RS-485 communication special adapter When using, refer also to FX Series User's Manual - Data Communication Edition.	-

		Manual title	Manual number	Contents	Model name code
△	Supplied with product	FX3U-485ADP Installation Manual	JY997D13801	Procedures for handling the RS-485 communication special adapter When using, refer also to FX Series User's Manual - Data Communication Edition.	-
✓	Supplied with product	FX-485PC-IF Hardware Manual	JY992D81901	Procedures for handling the RS-232C/RS-485 conversion interface When using, refer also to FX Series User's Manual - Data Communication Edition.	-
■CC-Link, CC-Link/LT When using each product, refer also to the User's Manual - Hardware Edition for the PLC main unit to be installed.					
△	Supplied with product	FX2N-16CCL-M Hardware Manual	JY992D87801	Procedures for handling the CC-Link master special function block When using, refer also to FX2N-16CCL-M User's Manual.	-
✓	Separate volume	FX2N-16CCL-M User's Manual	JY992D87901	Details of CC-Link master special function block	09R710
△	Supplied with product	FX3U-64CCL Installation Manual	JY997D29801	Procedures for handling the CC-Link Intelligent device station special function block When using, refer also to FX3U-64CCL User's Manual.	-
✓	Separate volume	FX3U-64CCL User's Manual	JY997D30401	Details of the CC-Link Intelligent device station special function block	09R718
✓	Supplied with product	FX2N-32CCL User's Manual	JY992D71701	Procedures for handling the CC-Link remote device station special function block	09R711
✓	Supplied with product	Remote I/O station and remote device station for CC-Link	As for the CC-Link remote I/O station and remote device station, refer to the relevant manuals and related documents.		-
△	Supplied with product	FX2N-64CL-M User's Manual - Hardware Volume	JY997D05401	Procedures for handling the CC-Link/LT master special function block When using, refer also to FX2N-64CL-M User's Manual - Details.	-
✓	Separate volume	FX2N-64CL-M User's Manual - Detailed Volume	JY997D08501	Details of the CC-Link/LT master special function block	09R706
✓	Supplied with product	Remote device Remote I/O Power supply adapter	As for the remote device station, remote I/O station, power supply adapter and dedicated power supply for CC-Link/LT, refer to the relevant manuals and related documents.		-
Manuals for analog/temperature control					
■Common					
✓	Separate volume	FX3G/FX3U/FX3UC Series User's Manual - Analog Control Edition	JY997D16701	Details of analog special function block (FX3U-4AD, FX3U-4DA, FX3UC-4AD) and analog special adapter (FX3U-***-**-ADP)	09R619
■Analog input, temperature input and temperature control When using each product, refer also to the User's Manual - Hardware Edition for the PLC main unit to be installed.					
△	Supplied with product	FX3G-2AD-BD Installation Manual	JY997D33501	Procedures for handling the 2-ch analog input expansion board When using, refer also to FX3G/FX3U/FX3UC Series User's Manual - Analog Control Edition.	-
△	Supplied with product	FX3U-4AD Installation Manual	JY997D20701	Procedures for handling the 4-ch analog input special function block When using, refer also to FX3G/FX3U/FX3UC Series User's Manual - Analog Control Edition.	-
✓	Supplied with product	FX2N-2AD User's Guide	JY992D74701	Procedures for handling the 2-ch analog input special function block	-
✓	Supplied with product	FX2N-4AD User's Guide	JY992D65201	Procedures for handling the 4-ch analog input special function block	-
✓	Supplied with product	FX2N-8AD User's Manual	JY992D86001	Procedures for handling the 8-ch analog input special function block (to be used also for thermocouple input)	09R608

		Manual title	Manual number	Contents	Model name code
△	Supplied with product	FX3U-4AD-ADP User's Manual	JY997D13901	Procedures for handling the 4-ch analog input special adapter When using, refer also to FX3G/FX3U/FX3UC Series User's Manual - Analog Control Edition.	-
△	Supplied with product	FX3U-4AD-PT-ADP User's Manual	JY997D14701	Procedures for handling the 4-ch Pt100 temperature sensor input special adapter When using, refer also to FX3G/FX3U/FX3UC Series User's Manual - Analog Control Edition.	-
△	Supplied with product	FX3U-4AD-PTW-ADP User's Manual	JY997D29101	Procedures for handling the 4-ch Pt100 temperature sensor input special adapter When using, refer also to FX3G/FX3U/FX3UC Series User's Manual - Analog Control Edition	-
✓	Supplied with product	FX2N-4AD-PT User's Guide	JY992D65601	Procedures for handling the 4-ch Pt100 temperature sensor input special function block	-
△	Supplied with product	FX3U-4AD-PNK-ADP User's Manual	JY997D29201	Procedures for handling the 4-ch Pt1000/Ni1000 temperature sensor input special adapter	-
△	Supplied with product	FX3U-4AD-TC-ADP User's Manual	JY997D14801	Procedures for handling the 4-ch thermocouple input special adapter When using, refer also to FX3G/FX3U/FX3UC Series User's Manual - Analog Control Edition.	-
✓	Supplied with product	FX2N-4AD-TC User's Guide	JY992D65501	Procedures for handling the 4-ch thermocouple input special function block	-
△	Supplied with product	FX2N-2LC User's Guide	JY992D85601	Procedures for handling the 2-ch temperature control special function block When using, refer to FX2N-2LC User's Manual.	-
✓	Separate volume	FX2N-2LC User's Manual	JY992D85801	Procedures for handling the 2-ch temperature control special function block	09R607
■Analog output When using each product, refer also to the Use's Manual - Hardware Edition for the PLC main unit to be installed.					
△	Supplied with product	FX3G-1DA-BD Installation Manual	JY997D33601	Procedures for handling the 1-ch analog output expansion board When using, refer also to FX3G/FX3U/FX3UC Series User's Manual - Analog Control Edition.	-
△	Supplied with product	FX3U-4DA-ADP User's Manual	JY997D14001	Procedures for handling the 4-ch analog output special adapter When using, refer also to FX3G/FX3U/FX3UC Series User's Manual - Analog Control Edition.	-
△	Supplied with product	FX3U-4DA Installation Manual	JY997D20801	Procedures for handling the 4-ch analog output special function block When using, refer also to FX3G/FX3U/FX3UC Series User's Manual - Analog Control Edition.	-
✓	Supplied with product	FX2N-2DA User's Guide	JY992D74901	Procedures for handling the 2-ch analog output special function block	-
■Analog input/output (mixed) When using each product, refer also to the User's Manual - Hardware Edition for the PLC main unit to be installed.					
✓	Supplied with product	FX2N-5A User's Manual	JY997D11401	Procedures for handling the 4-ch analog input and 1-ch analog output special function block	09R616
Manuals for positioning control					
■Common					
✓	Separate volume	FX3G/FX3U/FX3UC Series User's Manual - Positioning Control Edition	JY997D16801	Details of positioning functions of FX3G/FX3U/FX3UC Series	09R620

		Manual title	Manual number	Contents	Model name code
Other manuals					
When using each product, refer also to the User's Manual - Hardware Edition for the PLC main unit to be installed.					
■Variable analog potentiometers					
△	Supplied with product	FX3G-8AV-BD Installation Manual	JY997D33701	Procedures for handling the 8-ch variable analog potentiometers expansion board When using, refer also to FX3G/FX3U/FX3UC Series Programming Manual -Basic & Applied Instruction Edition	-
■Connector conversion					
△	Supplied with product	FX3G-CNV-ADP Installation Manual	JY997D32301	Procedures for handling the conversion function expansion adapter for connectors for connecting communication and analog special adapters	-
■Battery (maintenance option)					
△	Supplied with product	FX3U-32BL Battery Hardware Manual	JY997D14101	Battery life and handling procedures	-
■Memorry cassette					
△	Supplied with product	FX3G-EEPROM-32L Installation Manual	JY997D32401	Specifications and operating procedures of the memory cassette	-
■Display module					
△	Supplied with product	FX3G-5DM Installation Manual	JY997D33801	Procedures for mounting and handling the display module	-
■Extension power supply unit					
△	Supplied with product	FX3U-1PSU-5V Installation Manual	JY997D22501	Specifications and operating procedures of the extension power supply unit	-

1.2 Generic Names and Abbreviations Used in Manuals

Abbreviation/ generic name	Description
PLCs	
FX3G Series	Generic name for FX3G Series PLCs
FX3U Series	Generic name for FX3U Series PLCs
FX2N Series	Generic name for FX2N Series PLCs
FX3G PLCs or main units	Abbreviation of FX3G Series PLC main units
Expansion boards	Generic name for the following models FX3G-232-BD, FX3G-422-BD, FX3G-485-BD, FX3G-2AD-BD, FX3G-1DA-BD, FX3G-8AV-BD
Special adapters	Generic name for communication special adapters and analog special adapters
Communication special adapters	Generic name for the following models FX3U-232ADP(-MB), FX3U-485ADP(-MB)
Analog special adapters	Generic name for the following models FX3U-4AD-ADP, FX3U-4DA-ADP, FX3U-4AD-PT-ADP, FX3U-4AD-PTW-ADP, FX3U-4AD-PNK-ADP, FX3U-4AD-TC-ADP
Extension devices	Generic name for FX3U Series special function blocks, FX2N Series extension devices
FX2N Series extension devices	Generic name for FX2N Series input/output powered extension units, FX2N Series input/output extension blocks and FX2N Series special function blocks
Input/output extension devices	Generic name for FX2N Series input/output powered extension units, FX2N Series input/output extension blocks
FX2N Series input/output powered extension units	Generic name for the following models FX2N-32ER-ES/UL, FX2N-32ER, FX2N-32ES, FX2N-32ET-ESS/UL, FX2N-32ET, FX2N-48ER, FX2N-48ER-ES/UL, FX2N-48ET, FX2N-48ET-ESS/UL, FX2N-48ER-UA1/UL
FX2N Series input/output extension blocks	Generic name for the following models FX2N-8ER-ES/UL, FX2N-8ER
FX2N Series input extension blocks	Generic name for the following models FX2N-16EX-ES/UL, FX2N-16EX, FX2N-16EX-C, FX2N-16EXL-C, FX2N-8EX-ES/UL, FX2N-8EX-UA1/UL, FX2N-8EX
FX2N Series output extension blocks	Generic name for the following models FX2N-16EYR-ES/UL, FX2N-16EYR, FX2N-16EYT-ESS/UL, FX2N-16EYT, FX2N-16EYS, FX2N-16EYT-C, FX2N-8EYR-ES/UL, FX2N-8EYT-ESS/UL, FX2N-8EYR, FX2N-8EYT, FX2N-8EYT-H
Special function blocks	Generic name for FX3U Series special function blocks, FX2N Series special function blocks
FX3U Series special function blocks	Generic name for the following models FX3U-64CCL, FX3U-4AD, FX3U-4DA
FX2N Series special function units	Generic name for the following models FX2N-16CCL-M, FX2N-32CCL, FX2N-64CL-M, FX2N-2AD, FX2N-4AD, FX2N-8AD, FX2N-4AD-PT, FX2N-4AD-TC, FX2N-2LC, FX2N-2DA, FX2N-4DA, FX2N-5A
Memory cassettes	Generic name for the following models FX3G-EEPROM-32L
Display module	Generic name for the following models FX3G-5DM
Battery	Abbreviation of model FX3U-32BL battery
FX Series terminal blocks	Generic name for the following models FX-16E-TB, FX-32E-TB, FX-16EX-A1-TB, FX-16EYR-TB, FX-16EYS-TB, FX-16EYT-TB, FX-16EYT-H-TB
Extension cables	Generic name for the following models FX0N-30EC, FX0N-65EC
Input/output cables	Generic name for the following models FX-16E-500CAB-S, FX-16E□□□CAB, FX-16E-□□□CAB-R, FX-A32E-□□□CAB 150, 300 or 500 is entered in □□□.
Connectors for input/output	Generic name for the following models FX2C-I/O-CON, FX2C-I/O-CON-S, FX2C-I/O-CON-SA
CC-Link master	Abbreviation of FX2N-16CCL-M
Remote device stations	Abbreviation of FX2N-32CCL
Intelligent device stations	Abbreviation of FX3U-64CCL
Peripheral devices	Generic name for programming software, handy programming panel (HPP) and indicator
Programming tool	Generic name for programming software and handy programming panel (HPP)
Programming software	Generic name for GX Developer and FX-PCS/WIN (-E)
GX Developer	Abbreviation of programming software packages SW□D5C-GPPW-J and SW□D5C-GPPW-E
FX-PCS/WIN (-E)	Abbreviation of model FX-PCS/WIN and FX-PCS/WIN-E programming software packages

Abbreviation/ generic name	Description
Handy programming panels (HPP)	Generic name for the following models FX-20P, FX-20P-E
RS-232C/RS-422 converters	Generic name for the following models FX-232AW, FX-232AWC, FX-232AWC-H
RS-232C/RS-485 converters	Abbreviation of FX-485PC-IF
Indicators	
GOT1000 Series	Generic name for GT15, GT11 and GT10
GOT-900 Series	Generic name for GOT-A900 Series and GOT-F900 Series
GOT-A900 Series	Generic name for GOT-A900 Series
GOT-F900 Series	Generic name for GOT-F900 Series
Manuals	
FX3G Hardware Edition	Abbreviation of FX3G Series User's Manual - Hardware Edition
Programming manual	Abbreviation of FX3G/FX3U/FX3UC Series Programming Manual - Basic & Applied Instructions
Data Communication Edition	Abbreviation of FX Series User's Manual - Data Communication Edition
Analog Control Edition	Abbreviation of FX3G/FX3U/FX3UC Series User's Manual - Analog Control Edition
Positioning Control Edition	Abbreviation of FX3G/FX3U/FX3UC Series User's Manual - Positioning Control Edition

2. Features and Part Names

2.1 Major Features

1. Basic functions

[Up to 256 input/output points]
The total number of inputs and outputs (128 points maximum) directly connected to the PLC and remote inputs and outputs (128 points maximum) of the CC-Link can be extended to 256 points.

[Program memory]
The PLC has a 32K-step EEPROM memory.

[Built-in USB port]
The PLC has a built-in USB port for the programming communication function to enable high-speed communication at 12Mbps.

[Built-in RUN/STOP switch]
The PLC can be started and stopped with the built-in switch.
RUN and STOP commands can be given to the PLC through a general-purpose input terminal or peripheral device.

[Built-in Variable analog potentiometers]
The PLC has two built-in variable analog potentiometers available for adjusting the timer set time.

[Writing during RUN]
The programming software for personal computer enables you to modify the program while the PLC is running.

[Built-in clock function]
The PLC has a clock function to control the time.

[Programming tool]
Use a version of GX Developer applicable to FX3G.

→ **Refer to 5. Version Information and Peripheral Equipment Connectability in this manual.**

*For peripheral devices not applicable to FX3G Series, specify FX1N Series for model selection, and you can program the sequence.
In this case, use instructions and devices within the ranges common to FX3G Series and the selected model of PLC.

[Remote debugging of program]
Use of programming software enables you to remotely transfer the program and monitor the PLC operation through a modem connected to the RS-232C expansion board and RS-232C communication special adapter.

2. Input/output high-speed processing functions of main unit

[High-speed counter function]
Input terminals of main unit

- Input of open collector transistor output
- 1-phase 60kHz x 4points + 10kHz x 2points
- 2-phase 30kHz x 2 points + 5kHz x 1 points

→ **Refer to 11. Use of High-speed Counters in this manual and Programming Manual.**

[Pulse catch function]
Signals with short ON width or OFF width can be captured without a complicated program.

→ **Refer to 10. Input Wiring Procedures in this manual and Programming Manual.**

Input terminal	Signal ON/OFF width
X000, X001, X003, X004	10μs
X002, X005, X006, X007	50μs

[Input interruption function]
The PLC can process interruption routines with higher priority using external signals whose minimum ON duration or OFF duration is 10μs (X000, X001, X003 and X004) or 50μs (X002 and X005).(The timer interruption function is also provided.)

→ **Refer to 10. Input Wiring Procedures in this manual and Programming Manual.**

[Pulse width/period measurement function] (Supported in Ver. 1.10 or later)
The width/period of pulses from input terminals (X000, X001, X003 and X004) of the main unit can be measured in units of 10μs.

→ **Refer to 10. Input Wiring Procedures and Programming Manual.**

[Pulse output function]
When output terminals in the transistor output type main unit are used, pulses (open collector outputs) of up to 100kHz can be output simultaneously to 3 axes*1 (Y000, Y001 and Y002).

*1. 2 axes (Y000 and Y001) in 14-point and 24-point type main units

Using a number of instructions programming is simplified.
→ **Refer to Positioning Control Edition.**

[Various positioning instructions]
→ **Refer to Positioning Control Edition.**

Instruction	Description
DSZR	Mechanical zero return instruction with DOG search function
ABS	Instruction to read the current value from our servo amplifier with absolute position (ABS) detecting function
DRVI	Positioning (relative positioning) to specify the movement from the current position
DRVA	Positioning (absolute positioning) to specify the target position based on the current value 0
PLSV	Instruction to change the pulse train output frequency
TBL	Instruction for positioning based on batch setting of positioning operation, moving distance and speed

3. Display functions (display module) (Supported in Ver. 1.10 or later)

FX3G-5DM Display Module (option) can be incorporated in the PLC.

[Monitor/test function]
Devices can be monitored and tested by operating the buttons on the display module.
The button operations can be inhibited by the user program.

[Other functions]
On the display module, you can set the time, adjust the contrast and display the PLC version and error codes.
→ **Refer to 19. Display Module(FX3G-5DM) in this manual.**

4. Communication and network functions

The expansion board and special adapter for each communication function can be connected.

[Kinds of communication functions]

- Programming communication through RS-232C, RS-422 and USB
  → **Refer to Data Communication Edition.**
- N:N Network
  → **Refer to Data Communication Edition.**
- Parallel link
  → **Refer to Data Communication Edition.**
- Computer link
  → **Refer to Data Communication Edition.**
- Inverter communication
  (Supported in Ver. 1.10 or later)
  → **Refer to Data Communication Edition.**
- Non-protocol communication through built-in RS-422/RS-232C/RS-485
  → **Refer to Data Communication Edition.**
- CC-Link
  - Master station
    FX2N-16CCL-M
  - Intelligent device station
    FX3U-64CCL
  - Remote device station
    FX2N-32CCL
    → **Refer to the manual for each product.**
- CC-Link/LT
  - Master station : FX2N-64CL-M
  - Remote I/O station, Remote device station
    → **Refer to the manual for each product.**

5. Analog functions

The special adapter and special function block for each analog function are connected.
→ **Refer to Analog Control Edition.**

[Kinds of analog functions]

- Voltage/current input
- Voltage/current output
- Temperature sensor input (thermocouple and platinum resistance thermometer sensor)
- Temperature control

2.2 Names and Functions of Parts

2.2.1 Front Panel

Factory default configuration (standard)

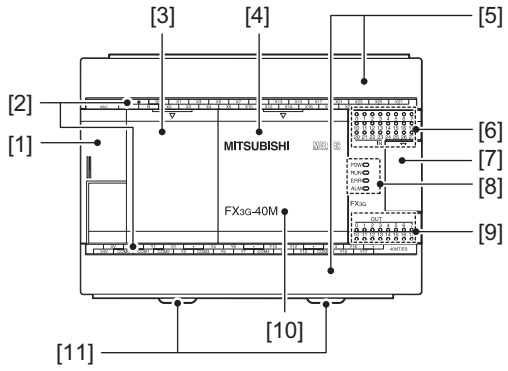

[1] Peripheral device connecting connector cover
The peripheral device connector, variable analog potentiometers and RUN/STOP switch are located under this cover.

[2] Terminal names
The signal names for power supply, input and output terminals are shown.

[3] Top cover(S) (40points, 60points type only)
Mount the expansion board and memory cassette under this cover.

[4] Top cover
Mount the expansion board, display module, memory cassette and battery under this cover.

[5] Terminal block covers
The covers can be opened for wiring.
Keep the covers closed while the PLC is running (the unit power is on).

[6] Input display LEDs (red)
When an input terminal (X000 or more) is turned on, the corresponding LED lights.

[7] Extension device connecting connector cover
Connect the extension cables of input/output powered extension unit/block or special function block to the extension device connecting connectors under this cover.
FX3U Series extension devices and FX2N Series extension devices can be connected.
→ **For details on the extension devices, refer to Chapter 15, Chapter 16, Chapter 17 and Section 18.1.**

[8] Operation status display LEDs
The operation status of the PLC can be checked with the LEDs.
The LEDs turn off, light and flash according to the following table.
→ **For details on the operation status, refer to Section 14.5.**

LED name	Display color	Description
POW	Green	On while power is on the PLC.
RUN	Green	On while the PLC is running.
ERR	Red	Flashing when a program error occurs.
	Red	Lights when a CPU error occurs.
ALM	Red	Lights when the battery voltage drops. (When the optional battery is used)

[9] Output display LEDs (red)
When an output terminal (Y000 or more) is turned on, the corresponding LED lights.

[10] Model name (abbreviation)
The model name of the main unit is indicated.
Check the nameplate on the right side for the model name.

[11] DIN rail mounting hooks
The main unit can be installed on DIN46277 rail (35mm (1.38") wide).

When the top covers are open

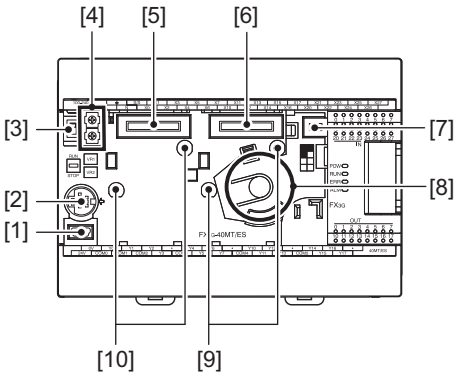

[1]	**Peripheral device connecting connector (USB)**	Connect a programming tool(PC) to program a sequence. → **For details on applicable peripheral devices, refer to Chapter 5.**
[2]	**Peripheral device connecting connector (RS-422)**	Connect a programming tool to program a sequence. → **For details on applicable peripheral devices, refer to Chapter 5.**
[3]	**RUN/STOP switch**	To stop writing (batch) of the sequence program or operation, set the switch to STOP (slide it downward). To start operation (run the machine), set it to RUN (slide it upward).
[4]	**Variable analog potentiometers**	Two variable analog potentiometers are built in. Upper side : VR1, Lower side : VR2
[5]	**Optional equipment connector1**	Connect the expansion board and memory cassette to the connector.
[6]	**Optional equipment connector2 (40points, 60points type only)**	Connect the expansion board, display module and memory cassette to the connector.
[7]	**Battery connector**	Connect the optional battery to the connector.
[8]	**Battery holder**	This holder accommodates the optional battery.
[9]	**Optional equipment connecting screw holes2 (2 places) (40points, 60points type only)**	These holes are designed to secure the expansion board and memory cassette with screws.
[10]	**Optional equipment connecting screw holes1 (2 places)**	These holes are designed to secure the expansion board and memory cassette with screws.

When the terminal block covers are open

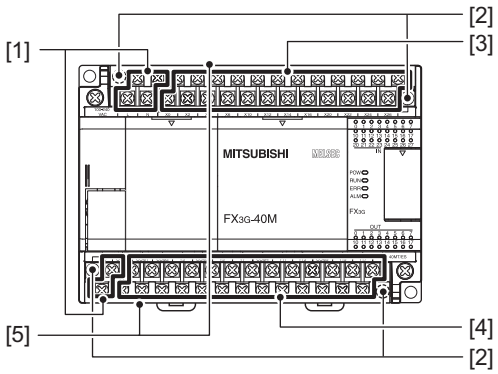

[1]	**Power supply terminal**	Connect the power supply to the main unit.
[2]	**Terminal block mounting screws**	If the main unit must be replaced, loosen the screws (slightly loosen the left and right screws), and the upper part of the terminal block can be removed. → **For anchoring of the terminal block, refer to Subsection 9.1.2.**
[3]	**Input (X) terminals**	Wire switches and sensors to the terminals.
[4]	**Output (Y) terminals**	Wire loads (contactors, solenoid valves, etc.) to be driven to the terminals.
[5]	**Terminal cover**	A protective terminal cover (refer to the following drawing) is fitted to the lower stage of each terminal block. The cover prevents fingers from touching terminals, thereby improving safety. 

2.2.2 Sides

Left side

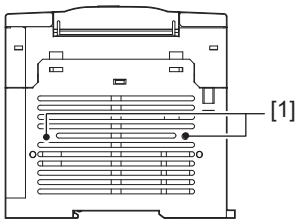

Right side

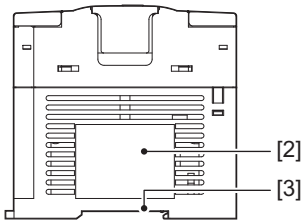

[1] Connector conversion adapter connecting screw holes1 (2 places) These holes are designed to secure the connector conversion adapter with screws.

[2] Nameplate The product model name, control number and power supply specifications are shown.

Example: FX3G-40MT/ES (manufacturer's serial number: 8X0001)

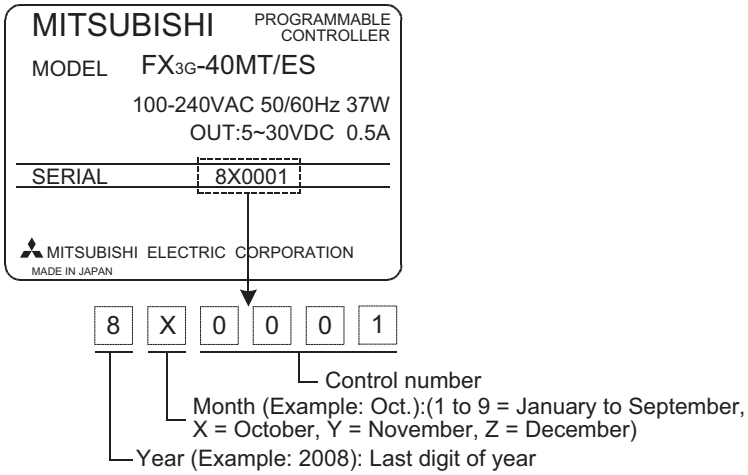

[3] DIN rail mounting groove The unit can be installed on DIN46277 rail (35 mm (1.38") wide).

3. Introduction of Products

3.1 List of Products and Interpretation of Model Names

The following system configuration is classified into product groups A to N in the product introduction sections given below.

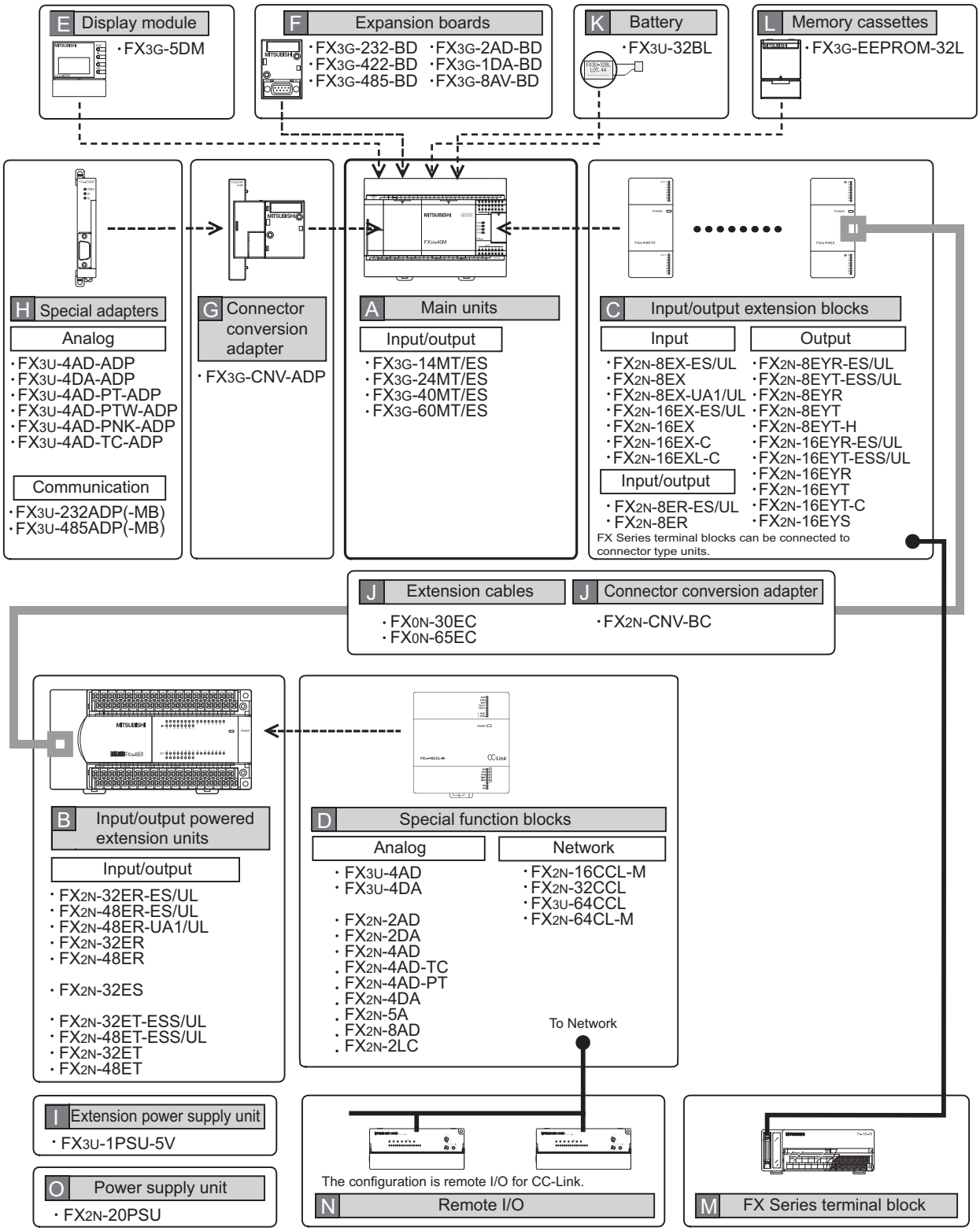

3.1.1 Main units

A

The main unit incorporates a CPU, memory, input and output terminals and power supply.
To establish a system, at least one main unit is necessary.

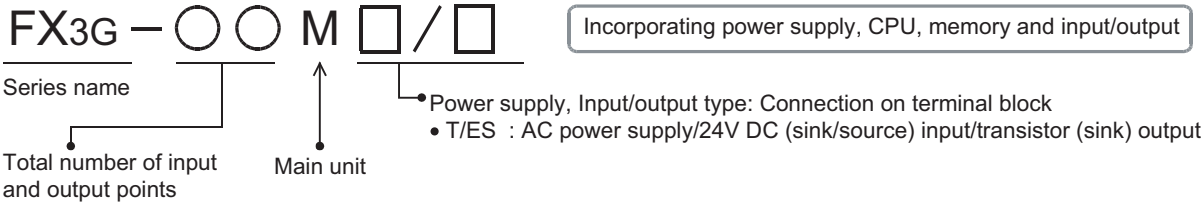

Model name	Number of input/output points			Input type	Output type	Connection form
	Total number of points	Number of input points	Number of output points			
AC power supply common to 24V DC sink and source input						
FX3G-14MT/ES	14(16)*1	8	6(8)*1	24V DC(sink/source)	Transistor(sink)	Terminal block
FX3G-24MT/ES	24(32)*1	14(16)*1	10(16)*1	24V DC(sink/source)	Transistor(sink)	Terminal block
FX3G-40MT/ES	40	24	16	24V DC(sink/source)	Transistor(sink)	Terminal block
FX3G-60MT/ES	60(64)*1	36(40)*1	24	24V DC(sink/source)	Transistor(sink)	Terminal block

*1. Each value inside ( ) indicates the number of occupied points.

3.1.2 Input/output powered extension units

B

The input/output powered extension unit incorporates a power supply circuit and input and output terminals.
It is designed to add input and output terminals.
It can supply power to extension devices connected on the downstream side.

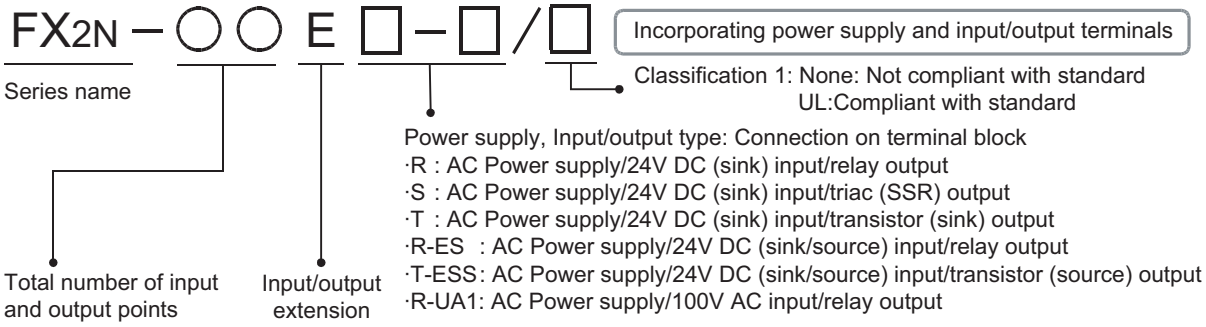

Model name	Number of input/output points			Input type	Output type	Connection form
	Total number of points	Number of input points	Number of output points			
AC power supply common to 24V DC sink and source input						
FX2N-32ER-ES/UL	32	16	16	24V DC(sink/source)	Relay	Terminal block
FX2N-32ET-ESS/UL	32	16	16	24V DC(sink/source)	Transistor(source)	Terminal block
FX2N-48ER-ES/UL	48	24	24	24V DC(sink/source)	Relay	Terminal block
FX2N-48ET-ESS/UL	48	24	24	24V DC(sink/source)	Transistor(source)	Terminal block
AC power supply only for 24V DC sink input						
FX2N-32ER	32	16	16	24V DC(sink)	Relay	Terminal block
FX2N-32ES	32	16	16	24V DC(sink)	Triac	Terminal block
FX2N-32ET	32	16	16	24V DC(sink)	Transistor(sink)	Terminal block
FX2N-48ER	48	24	24	24V DC(sink)	Relay	Terminal block
FX2N-48ET	48	24	24	24V DC(sink)	Transistor(sink)	Terminal block
AC power supply common to 100V AC sink and source input						
FX2N-48ER-UA1/UL	48	24	24	100V AC	Relay	Terminal block

3.1.3 Input/output extension blocks

C

The input/output extension block has built-in input or output terminals to add input or output terminals. Connect the input/output extension block to the main unit or input/output powered extension unit.

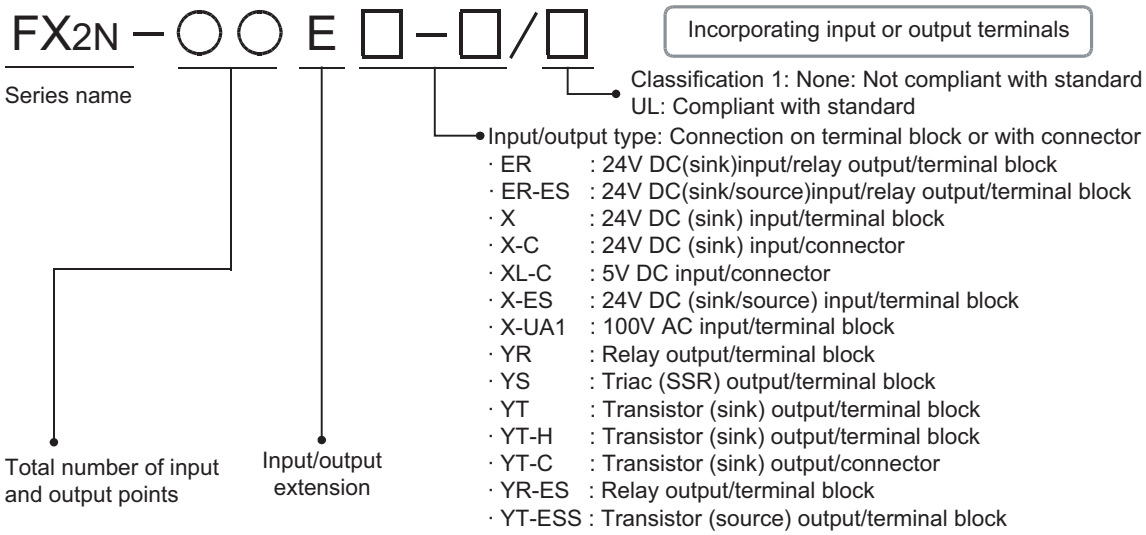

Model name	Number of input/output points			Input type	Output type	Connection form
	Total number of points	Number of input points	Number of output points			
Input/Output extension type						
FX2N-8ER-ES/UL	8(16)*1	4(8)*1	4(8)*1	24V DC(sink/source)	Relay	Terminal block
FX2N-8ER	8(16)*1	4(8)*1	4(8)*1	24V DC(sink)	Relay	Terminal block
Input extension type						
FX2N-8EX-ES/UL	8	8	-	24V DC(sink/source)	-	Terminal block
FX2N-8EX	8	8	-	24V DC(sink)	-	Terminal block
FX2N-8EX-UA1/UL	8	8	-	100V AC	-	Terminal block
FX2N-16EX-ES/UL	16	16	-	24V DC(sink/source)	-	Terminal block
FX2N-16EX	16	16	-	24V DC(sink)	-	Terminal block
FX2N-16EX-C	16	16	-	24V DC(sink)	-	Connector
FX2N-16EXL-C	16	16	-	5V DC	-	Connector
Output extension type						
FX2N-8EYR-ES/UL	8	-	8	-	Relay	Terminal block
FX2N-8EYT-ESS/UL	8	-	8	-	Transistor(source)	Terminal block
FX2N-8EYR	8	-	8	-	Relay	Terminal block
FX2N-8EYT	8	-	8	-	Transistor(sink)	Terminal block
FX2N-8EYT-H	8	-	8	-	Transistor(sink)	Terminal block
FX2N-16EYR-ES/UL	16	-	16	-	Relay	Terminal block
FX2N-16EYT-ESS/UL	16	-	16	-	Transistor(source)	Terminal block
FX2N-16EYR	16	-	16	-	Relay	Terminal block
FX2N-16EYS	16	-	16	-	Triac	Terminal block
FX2N-16EYT	16	-	16	-	Transistor(sink)	Terminal block
FX2N-16EYT-C	16	-	16	-	Transistor(sink)	Connector

*1. Each value inside ( ) indicates the number of occupied points.

3.1.4 Special function blocks

For details of each product, refer to the product manual.

1) Analog control

D

Model name	Analog		Description
	Input	Output	
Analog input			
FX3U-4AD	4ch	-	Voltage/current input
FX2N-2AD	2ch	-	Voltage/current input
FX2N-4AD	4ch	-	Voltage/current input
FX2N-8AD	8ch	-	Voltage/current/temperature (thermocouple) input
FX2N-4AD-PT	4ch	-	Platinum resistance thermometer sensor input
FX2N-4AD-TC	4ch	-	Temperature (thermocouple) input
Analog output			
FX3U-4DA	-	4ch	Voltage/current output
FX2N-2DA	-	2ch	Voltage/current output
FX2N-4DA	-	4ch	Voltage/current output
Analog input/output mixed			
FX2N-5A	4ch	1ch	Voltage/current input/output
Temperature control			
FX2N-2LC	2 loops	-	Temperature control (resistance thermometer sensor/thermocouple)

2) Data link functions

D

Model name	Description
FX2N-16CCL-M	Master for CC-Link Connectable stations: Remote I/O station: 4 stations Remote device station: 8 stations
FX3U-64CCL	Intelligent device station for CC-Link [1 to 4 stations occupied]
FX2N-32CCL	Remote device station for CC-Link [1 to 4 stations occupied]
FX2N-64CL-M	Master for CC-Link/LT

3.1.5 Display module

E

Model name	Description
FX3G-5DM	Display module that can be incorporated in FX3G Series main unit

3.1.6 Expansion boards

F

Model name	Description
FX3G-232-BD	For RS-232C communication
FX3G-422-BD	For RS-422 communication
FX3G-485-BD	For RS-485 communication
FX3G-8AV-BD	For 8-ch Analog volume
FX3G-2AD-BD	2-ch voltage/current input
FX3G-1DA-BD	1-ch voltage/current output

3.1.7 Connector conversion adapter

G

Model name	Description
FX3G-CNV-ADP	Special adapter connection conversion adapter

3.1.8 Special adapters

H

Model name	Description
FX3U-232ADP(-MB)	RS-232C communication
FX3U-485ADP(-MB)	RS-485 communication
FX3U-4AD-ADP	4-ch voltage/current input
FX3U-4DA-ADP	4-ch voltage/current output
FX3U-4AD-PT-ADP	4-ch platinum resistance thermometer sensor input (-50 to 250°C)
FX3U-4AD-PTW-ADP	4-ch platinum resistance thermometer sensor input (-100 to 600°C)
FX3U-4AD-PNK-ADP	4-ch Pt1000/Ni1000 resistance thermometer sensor input
FX3U-4AD-TC-ADP	4-ch thermocouple (K, J type) temperature sensor input

3.1.9 Extension power supply unit

I

Model name	Description	Driving power supply
FX3U-1PSU-5V	Extension power supply 5V DC 1A	100 to 240V AC

3.1.10 Extension cables and connector conversion adapter/ Battery/Memory cassettes

J
K
L

Classification	Model name		Description
Extension cables J	FX0N-65EC*1	0.65m (2'1")	These cables are used to mount input/output extension units/blocks for FX2N and special function blocks away from the main unit.
	FX0N-30EC*1	0.3m (0'11")	
Connector conversion adapter J	FX2N-CNV-BC		Connector conversion adapter to connect input/output extension blocks for FX2N and special function blocks with model FX0N-30/65EC extension cable
Battery K	FX3U-32BL		This battery backs up the following data. • General devices (Parameter setting is required.) - M1536 to M7679 - S1000 to S4095 - D1100 to D7999 - R0 to R23999 • Time on clock
Memory cassettes L	FX3G-EEPROM-32L		32k-step EEPROM memory (with transfer switch)

*1. When the extension cable (FX0N-30EC or FX0N-65EC) is used, use up to one cable for one system. When an extension block is added, use FX2N-CNV-BC in addition to the cable.

3.1.11 FX Series terminal blocks (cables and connectors)

1. FX Series terminal blocks

M

Model name	Number of input points	Number of output points	Function
FX-16E-TB	16 input points or 16 output points		To be directly connected to the PLC input/output connector
FX-32E-TB	32 input points, 32 output points or 16 input/output points		
FX-16EX-A1-TB	16	-	100V AC input
FX-16EYR-TB	-	16	Relay output
FX-16EYS-TB	-	16	Triac output
FX-16EYT-TB	-	16	Transistor output (sink)
FX-16EYT-H-TB	-	16	Transistor output (sink)

2. Input/output cables

Model name	Function	
FX-16E-500CAB-S	5m(16'4")	Bulk wire
FX-16E-150CAB	1.5m(4'11")	Flat cable (with tube). Both ends are provided with 20-pin connectors.
FX-16E-300CAB	3m(9'10")	
FX-16E-500CAB	5m(16'4")	
FX-16E-150CAB-R	1.5m(4'11")	Round multicore cable. Both ends are provided with 20-pin connectors.
FX-16E-300CAB-R	3m(9'10")	
FX-16E-500CAB-R	5m(16'4")	
FX-A32E-150CAB	1.5m(4'11")	Flat cable (with tube). The end on the PLC side is provided with two 20-pin connectors, and the end on the terminal block side is provided with a exclusive connector. 1 common terminal for 32 input/output points
FX-A32E-300CAB	3m(9'10")	
FX-A32E-500CAB	5m(16'4")	

3. Input/output connector

Model name	Function	
FX2C-I/O-CON	10-piece set	Input/output connector for flat cable
FX2C-I/O-CON-S	5-piece set	Input/output connector for bulk wire for 0.3 mm^2 [AGW22]
FX2C-I/O-CON-SA	5-piece set	Input/output connector for bulk wire for 0.5 mm^2 [AGW20]

3.1.12 Remote I/O

N

For the remote I/O of CC-Link and CC-Link/LT, refer to the manual and catalog of each master.

3.1.13 Power supply unit

O

Model name	Description	Driving power supply
FX2N-20PSU	24V DC power supply	100 to 240V AC

3.2 Connector Types and Cables for Program Communication

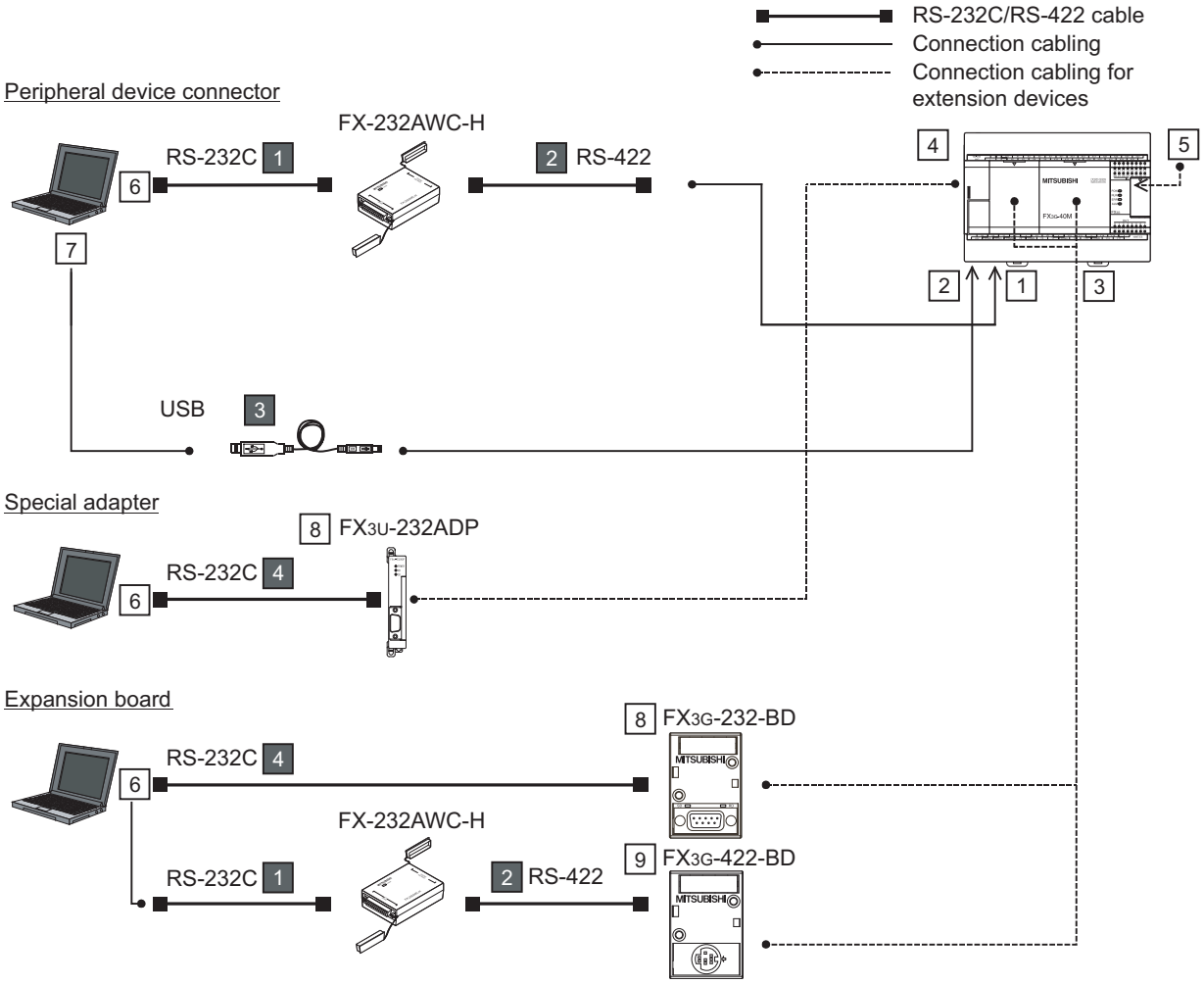

No.	Shape of connector or combination with cable		No.	Shape of connector or combination with cable	
1	Peripheral device connector [RS-422] MINI DIN 8Pin		6	Half pitch 14Pin	2 "FX-422CAB0"+ 1 "F2-232CAB-2"+ "FX-232AW/FX-232AWC/FX-232AWC-H"
2	Peripheral device connector [USB] MINI B connector female [USB2.0]				4 FX-232CAB-2
3	Expansion board connector			D-SUB 25Pin	2 "FX-422CAB0"+ 1 "F2-232CAB" + "FX-232AW/FX-232AWC/FX-232AWC-H"
4	Special adapter connector				4 F2-232CAB-1
5	Extension device (input/output powered extension unit/ block and special function block) connector		7	USB A connector, female	3 USB cable
6	D-SUB 9Pin	2 "FX-422CAB0"+ 1 "F2-232CAB-1" + "FX-232AW/FX-232AWC/FX-232AWC-H"	8	FX3G-232-BD D-SUB 9Pin [RS-232C] FX3U-232ADP(-MB) D-SUB 9Pin [RS-232C]	
		4 FX-232CAB-1	9	FX3G-422-BD MINI DIN 8Pin [RS-422]	

When FX-232AW or FX-232AWC is used, the communication baud rate is 19,200 bps or less.

→ **For details, refer to Subsection 3.2.3.**

3.2.1 Programming tool

The following programming tool supports FX3G Series PLCs.

Model name	Description
GX Developer	Version 8.72A or later of SW□D5C-GPPW-J and SW□D5C-GPPW-E supports FX3G. Although the tool earlier than version 8.72A can be used for programming by selecting FX1N(C), restrictions will be made on programming.

→ **For more information, refer to 5. Version Information and Peripheral Equipment Connectability.**

3.2.2 Communication cables

Model name		Description
USB cable		
USB cable*1 3	3m (9'10")	USB A plug ⇔ USB MINI B plug For connection between personal computer and FX3G programming port (USB)
RS-232C cable		
F2-232CAB-1 1	3m (9'10")	D-SUB 9Pin ⇔ D-SUB 25Pin For connection between personal computer and RS-232C/RS-422 converter
F2-232CAB 1	3m (9'10")	D-SUB 25Pin ⇔ D-SUB 25Pin For connection between personal computer and RS-232C/RS-422 converter
F2-232CAB-2 1	3m (9'10")	Half-pitch 14-pin ⇔ D-SUB 25Pin For connection between personal computer and RS-232C/RS-422 converter
FX-232CAB-1 4	3m (9'10")	D-SUB 9Pin ⇔ D-SUB 9Pin For connection between personal computer and RS-232C/RS-422 converter FX3G-232-BD, FX3U-232ADP(-MB)
FX-232CAB-2 4	3m (9'10")	Half-pitch 14-pin ⇔ D-SUB 9Pin For connection between personal computer and RS-232C/RS-422 converter FX3G-232-BD, FX3U-232ADP(-MB)
RS-422 cable		
FX-422CAB0 2	1.5m (4'11")	D-SUB 25Pin ⇔MINI DIN 8Pin For connection between RS-232C/RS-422 converter and FX3G programming port FX3G-422-BD

*1. The following USB cables are applicable.

Model name	Description
MR-J3USBCBL3M	USB cable 3m(9'10")
GT09-C30USB-5P	USB cable to transfer personal computer data (USB A plug) 3m(9'10")

3.2.3 Converters and interface

Model name	Description
RS-232C/RS-422 Converters	
FX-232AWC-H*1	RS-232C/RS-422 converter (high-speed type) Communication speed: Applicable to 9,600 to 115,200 bps .
FX-232AW	RS-232C/RS-422 converters Communication speed: Applicable to 9,600/19,200 bps
FX-232AWC	

*1. When the programming software is not applicable to FX3G, the converter is applicable only to 9,600 or 19,200 bps.

4. Specifications, External Dimensions and Terminal Layout (Main Units)

This Chapter explains the specifications, external dimensions and terminal layout of the main units.

→ **For the specifications for the input/output powered extension units, refer to Chapter 15.**
→ **For the specifications for the input/output extension blocks, refer to Chapter 16.**

4.1 Generic Specifications

Item	Specifications				
Ambient temperature	0 to 55°C (32 to 131°F) when operating and -25 to 75°C (-13 to 167°F) when stored				
Ambient humidity	5 to 95%RH (no condensation) when operating				
Vibration resistance		Frequency(Hz)	Acceleration(m/s^2)	Half amplitude(mm)	
	When installed on DIN rail	10 to 57	-	0.035	Sweep Count for X, Y, Z: 10 times (80 min in each direction)
		57 to 150	4.9	-	
	When installed directly	10 to 57	-	0.075	
		57 to 150	9.8	-	
Shock resistance	147m/s^2 Acceleration, Action time: 11ms, 3 times by half-sine pulse in each direction X, Y, and Z				
Noise resistance	By noise simulator at noise voltage of 1,000Vp-p, noise width of 1μs, rise time of 1ns and period of 30 to 100Hz				
Dielectric withstand voltage	1.5kV AC for one minute	Between each terminals and ground terminal*1			
	500V AC for one minute				
Insulation resistance	5MΩor more by 500V DC megger				
Grounding	Class D grounding (grounding resistance: 100 Ω or less) <Common grounding with a heavy electrical system is not allowed>*2				
Working atmosphere	Free from corrosive or flammable gas and excessive conductive dust				
Working altitude	< 2000m*3				

*1. For more information on the dielectric withstand voltage test and the insulation resistance test of the terminals of each product, refer to the following.

→ **Refer to Subsection 4.1.1.**

*2. Ground the PLC independently or jointly.

→ **Refer to Section 9.3.**

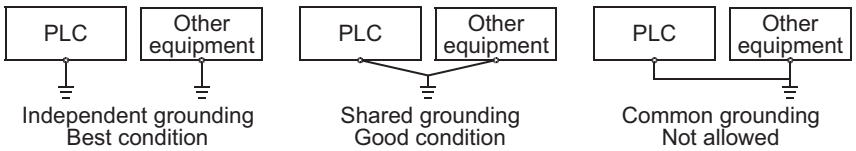

*3. The PLC cannot be used at a pressure higher than the atmospheric pressure to avoid damage.

4.1.1 Dielectric withstand voltage test and insulation resistance test

Perform dielectric withstand voltage test and insulation resistance test at the following voltage between each terminals and the main unit ground terminal.

Between terminals	Dielectric strength	Insulation resistance	Remarks
Terminals of main unit and input/output powered extension unit/block			
Between power supply terminal (AC power supply) and ground terminal	1.5kV AC for 1min	5M Ω or more on 500V DC Megger	-
Between 24V DC service power supply connected to input terminal (24V DC) and ground terminal	500V AC for 1min		-
Between input terminal (100V AC) and ground terminal	1.5kV AC for 1min		Only input/output powered extension unit/block
Between output terminal (relay) and ground terminal	1.5kV AC for 1min		Only input/output powered extension unit/block
Between output terminal (transistor) and ground terminal	500V AC for 1min		-
Between output terminal (triac) and ground terminal	1.5kV AC for 1min		Only input/output powered extension unit/block
Terminals of expansion board, special adapter and special function block			
Between terminal of expansion board and ground terminal	Not allowed	Not allowed	Since the expansion board and the main unit CPU are not insulated, it is not allowed to perform the dielectric withstand voltage test and insulation resistance test between them.
Between terminal of special adapter and ground terminal	500V AC for 1min	5M Ω or more on 500V DC Megger	-
Special function block	Each manual		Refer to the manual for each special function block.

4.2 Power Supply Specifications

The specifications for the main unit power supply are explained below.
For the power (current) consumed by the special function blocks, refer to this manual or the special function units/blocks manual.

Item	Specifications			
	FX3G-14MT/ES	FX3G-24MT/ES	FX3G-40MT/ES	FX3G-60MT/ES
Supply voltage	100 to 240V AC			
Allowable supply voltage range	85 to 264V AC			
Rated frequency	50/60Hz			
Allowable instantaneous power failure time	Operation can be continued upon occurrence of instantaneous power failure for 10 ms or less.			
Power fuse	250V 1A		250V 3.15A	
Rush current	30A max. 5ms or less/100V AC, 50A max. 5ms or less/200V AC			
Power consumption[*1]	31W	32W	37W	40W
24V DC service power supply	400mA			

*1. This item shows values when all 24V DC service power supplies are used in the maximum configuration connectable to the main unit, and includes the input current (7 or 5mA per point).

4.3 Input Specifications

The main unit input specifications are explained below.

4.3.1 24V DC Input (sink/source)

The input numbers in the table indicate the main unit terminal numbers. "X010 or more" means the numbers from X010 to the largest number that the main unit has.
(The input numbers for FX3G-14MT/ES are X000 to X007.)

→ **For details on input and source input, refer to Subsection 10.1.1**

Item		Specifications			
		FX3G-14MT/ES	FX3G-24MT/ES	FX3G-40MT/ES	FX3G-60MT/ES
Number of input points		8 points	14 points (16)*1	24 points	36 points (40)*1
Input connecting type		Removable terminal block (M3 screw)			
Input form		sink/source			
Input signal voltage		24V DC ±10%			
Input impedance	X000 to X007	3.3kΩ			
	X010 or more	-	4.3kΩ		
Input signal current	X000 to X007	7mA/24V DC			
	X010 or more	-	5mA/24V DC		
ON input sensitivity current	X000 to X007	4.5mA or more			
	X010 or more	-	3.5mA or more		
OFF input sensitivity current		1.5mA or less			
Input response time		Approx. 10ms			
Input signal form		No-voltage contact input Sink input: NPN open collector transistor Source input: PNP open collector transistor			
Input circuit insulation		Photocoupler insulation			
Input operation display		LED on panel lights when photocoupler is driven.			
Input circuit configuration		Sink input wiring / Source input wiring			

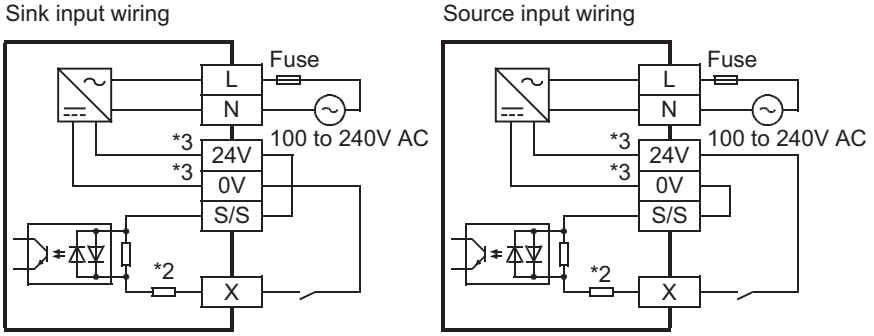

*1. Each value inside ( ) indicates the number of occupied points.

*2. Input impedance

*3. The "24V" and "0V" terminals are located on the output terminal side.
For details on the terminal layout, refer to Section 4.7.

4.4 Output Specifications

The main unit output specifications are explained below.

4.4.1 Transistor output

Item		Transistor output specifications			
		FX3G-14MT/ES	FX3G-24MT/ES	FX3G-40MT/ES	FX3G-60MT/ES
Number of output points		6 points(8)*1	10 points(16)*1	16 points	24 points
Connecting type		Removable terminal block (M3 screw)			
Output type/form		Transistor/sink output			
External power supply		5 to 30V DC			
Max. load	Resistance load	0.5A/point The total load current of resistance loads per common terminal should be the following value. → **For details on the common terminal for each model, refer to the 4.7 Terminal Layout.** • 1 output point/common terminal: 0.5A or less • 4 output points/common terminal: 0.8A or less			
	Inductive load	12W/24V DC The total of inductive loads per common terminal should be the following value. → **For details on the common terminal for each model, refer to the 4.7 Terminal Layout.** • 1 output point/common terminal: 12W or less/24V DC • 4 output points/common terminal: 19.2W or less/24V DC			
Open circuit leakage current		0.1mA or less/30V DC			
ON voltage		1.5 V or less			
Response time	OFF→ON	Y000, Y001:5µs or less/10mA or more (5 to 24V DC) Y002 or more:0.2ms or less/200mA or more (at 24V DC)		Y000 to Y002:5µs or less/10mA or more (5 to 24V DC) Y003 or more:0.2ms or less/200mA or more (at 24V DC)	
	ON→OFF	Y000, Y001:5µs or less/10mA or more (5 to 24V DC) Y002 or more:0.2ms or less/200mA or more (at 24V DC)		Y000 to Y002:5µs or less/10mA or more (5 to 24V DC) Y003 or more:0.2ms or less/200mA or more (at 24V DC)	
Circuit insulation		Photocoupler insulation			
Display of output operation		LED on panel lights when photocoupler is driven.			
Output circuit configuration		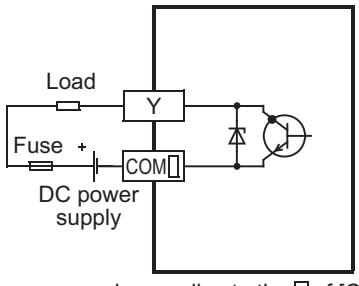 A common number applies to the □ of [COM □].			

*1. Each value inside ( ) indicates the number of occupied points.

4.5 Performance Specifications

The main unit performance specifications are explained below.

Item		Performance		
Operation control system		Stored program repetitive operation system with interruption function		
Input/output control system		Batch processing system (when END instruction is executed) Input/output refresh instruction and pulse catch function are provided.		
Programming language		Relay symbol system + step-ladder system (SFC notation possible)		
Program memory	**Max. memory capacity/type**	32000-step/EEPROM memory Max. allowable write: 20,000 times		
	Memory cassette (Option)	32000-step/EEPROM memory (with loader function) Max. allowable write: 10,000 times		
	Writing function during running	Provided (Program can be modified while the PLC is running.)		
	Keyword function	With keyword/Customer keyword function		
Real-time clock	**Clock function**[*1]	Built-in 1980 to 2079 (with correction for leap year) 2- or 4-digit year, accuracy within ±45 seconds/month at 25°C		
Kinds of instructions	**Basic instructions**	Sequence instructions: 29 Step-ladder instructions: 2		
	Applied instructions	123 kinds		
Processing speed	**Basic instructions**	Standard mode[*3] : 0.21μs/instruction Extension mode[*3] : 0.42μs/instruction		
	Applied instructions	Standard mode[*3] : 0.5μs/instruction Extension mode[*3] : 1.2μs/instruction		
Number of input/output points	**(1)Extension-combined number of input points**	128 points or less	(3)Total points	(1) + (2) ≤ (3) total number of points is 128 or less.
	(2)Extension-combined number of output points	128 points or less		
	(4)Remote I/O number of points (CC-Link)	128 points or less	-	
	(3) + (4) total number of points	256 points or less		
Input/output relay	**Input relay**	X000 to X177	The device numbers are octal.	
	Output relay	Y000 to Y177		
Auxiliary relay	**For general**	M0 to M383	384 points	-
	EEPROM keep	M384 to M1535	1152 points	-
	For general[*2]	M1536 to M7679	6144 points	-
	For special	M8000 to M8511	512 points	-
State	**For initial state (EEPROM keep)**	S0 to S9	10 points	-
	EEPROM keep	S10 to S999	990 points	-
	For general[*2]	S1000 to S4095	3096 points	-
Timer (on-delay timer)	**100ms**	T0 to T199	200 points	0.1 to 3,276.7 sec
	10ms	T200 to T245	46 points	0.01 to 327.67 sec
	1ms accumulating type (EEPROM keep)	T246 to T249	4 points	0.001 to 32.767 sec
	100ms accumulating type (EEPROM keep)	T250 to T255	6 points	0.1 to 3,276.7 sec
	1ms	T256 to T319	64 points	0.01 to 327.67 sec
Variable analog potentiometers		Available as analog timers VR1 : D8030 VR2 : D8031		
Counter	**16 bits up (For general)**	C0 to C15	16 points	Counting from 0 to 32,767
	16 bits up (EEPROM keep)	C16 to C199	184 points	Counting from 0 to 32,767

Item		Performance		
Counter	**32 bits up/down (For general)**	C200 to C219	20 points	Counting from -2,147,483,648 to +2,147,483,647
	32 bits up/down (EEPROM keep)	C220 to C234	15 points	
High-speed counter	**1-phase 1-count input in both directions (32 bits up/down) (EEPROM keep)**	C235 to C245	Counting from -2,147,483,648 to +2,147,483,647	
	1-phase 2-count input in both directions (32 bits up/down) (EEPROM keep)	C246 to C250		
	2-phase 2-count input in both directions (32 bits up/down) (EEPROM keep)	C251 to C255		
Data register (32 bits when paired)	**For general (16 bits)**	D0 to D127	128 points	-
	For EEPROM keep (16 bits)	D128 to D1099	972 points	-
	For general*2 (16 bits)	D1100 to D7999	6900 points	-
	File register (EEPROM keep)	D1000 to D7999	Maximum 7000 points	Can be set as file registers in units of 500 points from D1000 in the program area (EEPROM) using parameters.
	For special (16 bits)	D8000 to D8511	512 points	-
	For index (16 bits)	V0 to V7 Z0 to Z7	16 points	-
Extension register	**For general*2 (16 bits)**	R0 to R23999	24000 points	-
Extension file register	**For EEPROM keep (16 bits)**	ER0 to ER23999	24000 points	Stored in the EEPROM built-in the main unit, or stored in the EEPROM in the memory cassette when the memory cassette is used.
Pointer	**For branching of JUMP and CALL**	P0 to P2047	2048 points	For CJ instructions and CALL instructions
	Input interruption	I0□□ to I5□□	6 points	-
	Timer interruption	I6□□ to I8□□	3 points	
Nesting	**For master control**	N0 to N7	8 points	For MC instructions
Constant	**Decimal number (K)**	16bits	-32,768 to +32,767	
		32bits	-2,147,483,648 to +2,147,483,647	
	Hexadecimal number (H)	16bits	0 to FFFF	
		32bits	0 to FFFFFFFF	
	Real number (E)*4	32bits	-1.0×2^{128} to -1.0×2^{-126}, 0 , 1.0×2^{-126} to 1.0×2^{128} Decimal-point and exponential notations are possible.	

*1. The current time of the clock is backed up by the capacitor built-in the PLC. Supply the power to the PLC for 30 minutes or more to completely charge this large-capacity capacitor.
(The capacitor works for 10 days (atmosphere: 25°C)
The current time can be backed up by the battery when the optional battery is incorporated.
→ **For details on the battery, refer to Chapter 22.**

*2. These devices can be changed to the keep (battery backup) type using a parameter when the optional battery is used.
→ **For the parameter setting method, refer to Chapter 22.**

*3. The standard mode is selected when the program capacity is set to 16000 steps or less using a parameter.
The extension mode is selected when the program capacity is set to 16001 steps or more using a parameter.
→ **For parameter settings, refer to the Programming Manual.**

*4. Supported in Ver. 1.10 or later

4.6 External Dimensions (Weight/Accessories/Installation)

The external dimensions of the main unit are explained.

4.6.1 Main units

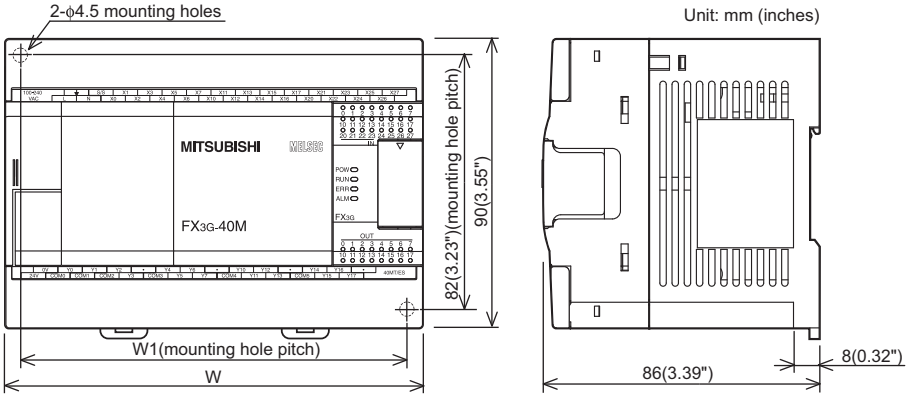

Series	Model name	W: mm (inches)	W1: mm (inches)	MASS (weight): kg (lbs)
FX3G-14M□	FX3G-14MT/ES	90 (3.55")	82 (3.23")	0.50 (1.10 lbs)
FX3G-24M□	FX3G-24MT/ES	90 (3.55")	82 (3.23")	0.55 (1.21lbs)
FX3G-40M□	FX3G-40MT/ES	130 (5.12")	122 (4.81")	0.70 (1.54 lbs)
FX3G-60M□	FX3G-60MT/ES	175 (6.89")	167 (6.58")	0.85 (1.87 lbs)

1) Accessories
   Dust proof protection sheet
   Manual supplied with product

2) Installation
   35mm(1.38") wide DIN rail or Direct installation (with screws) (M4 x 2)

4.7 Terminal Layout

The terminal layout in the main unit is shown below.

4.7.1 Interpretation of terminal block layout

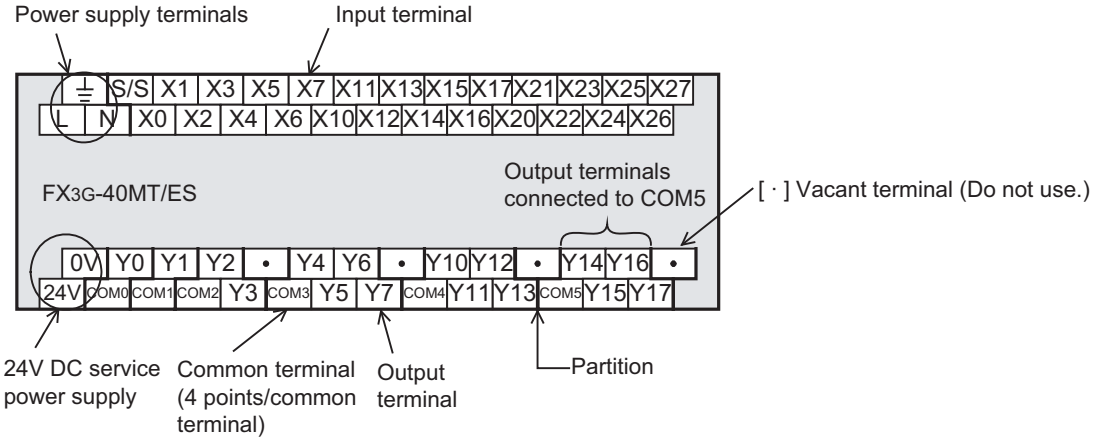

- Indication of output terminals connected to common terminal
  One common terminal covers 1, 2, 3 or 4 output points.
  The output numbers (Y) connected to a common terminal are enclosed with heavy partition lines.

4.7.2 FX3G-14MT/ES

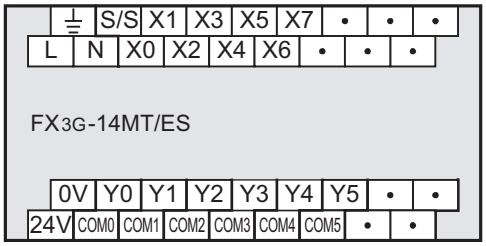

4.7.3 FX3G-24MT/ES

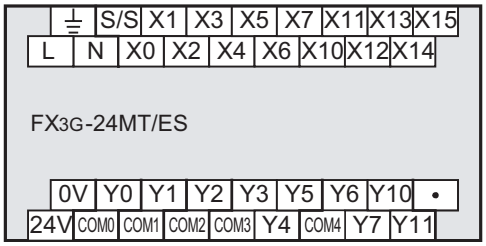

4.7.4 FX3G-40MT/ES

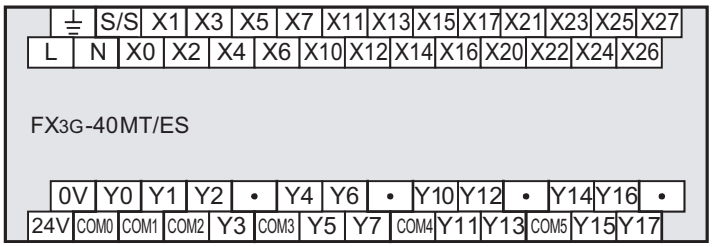

4.7.5 FX3G-60MT/ES

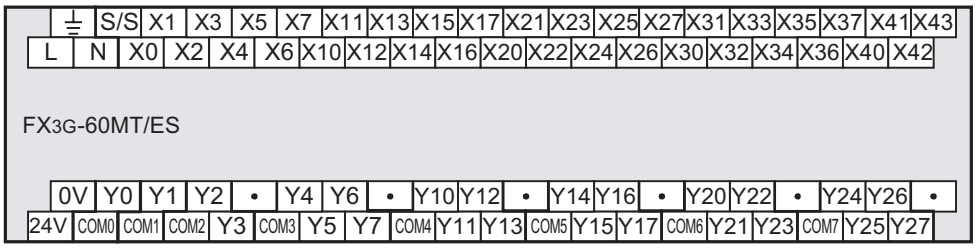

5. Version Information and Peripheral Equipment Connectability

5.1 Version Information

5.1.1 Version check method

In FX3G PLCs, users can obtain the PLC version information by monitoring special data register D8001 (decimal number).

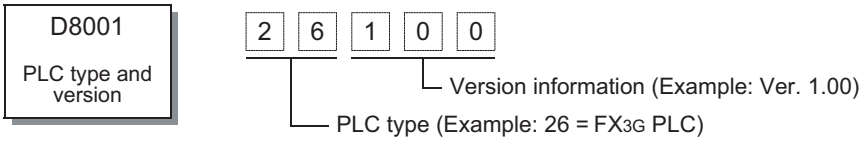

5.1.2 How to look at manufacturer's serial number

The year and month of production of the product can be seen from the manufacturer's serial number "SERIAL" indicated on the label adhered to the right side of the product.

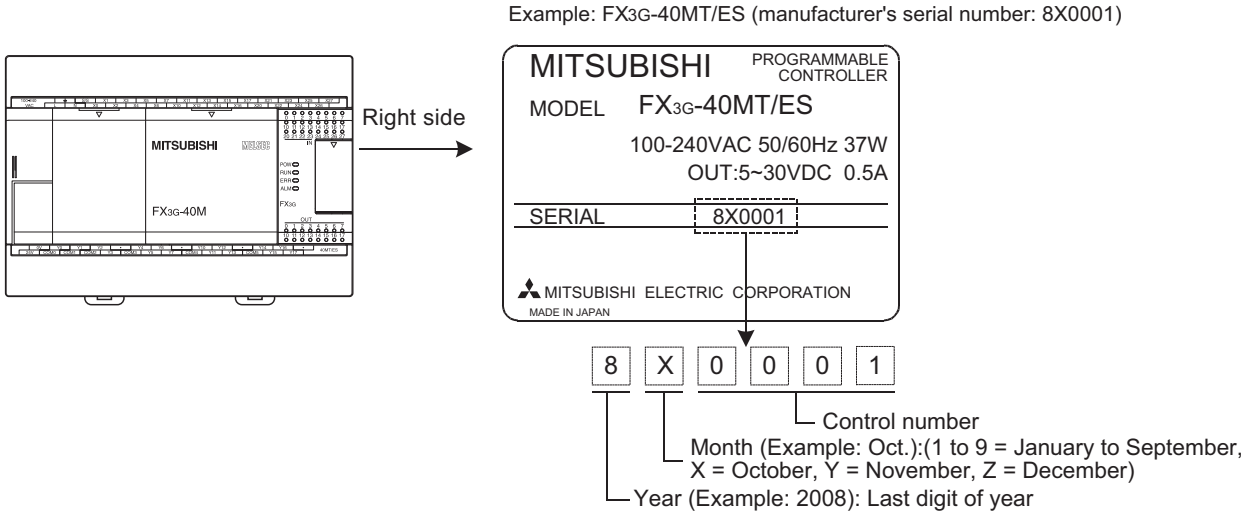

5.1.3 Version upgrade history

FX3G Series performed the following upgrade.

Version	Manufacturer's serial number	Contents of version upgrade
Ver.1.00	86**** (June, 2008)	First product
Ver.1.10	8X**** (October, 2008)	• Supports following 15 instructions: FLT(FNC49), VRRD(FNC85), VRSC(FNC86), ECMP(FNC110), EMOV(FNC112), EADD(FNC120), ESUB(FNC121), EMUL(FNC122), EDIV(FNC123), ESQR(FNC127), INT(FNC129), IVCK(FNC270), IVDR(FNC271), IVRD(FNC272), IVWR(FNC273) • Supports connection of following expansion boards: FX3G-2AD-BD, FX3G-1DA-BD, FX3G-8AV-BD • Supports connection of display module (FX3G-5DM) • Supports of the inverter communication function • Supports of the pulse width measurement function

5.2 Programming Tool Applicability

5.2.1 Applicable versions of programming tool

GX Developer is applicable to FX3G PLCs from the following version.

Model name (Media model name is shown below.)	Applicable GX Developer version	FX3G PLC version	Description
GX Developer • SW□D5C(F)-GPPW-J • SW□D5C(F)-GPPW-E	Ver.8.72A or later	Ver.1.00 or later (First product)	Model selection: FX3G
		Ver.1.10 or later	Supports FX3G PLCs (Ver.1.10 or later). The following instructions will be supported in the near future FLT(FNC49), ECMP(FNC110), EMOV(FNC112), EADD(FNC120), ESUB(FNC121), EMUL(FNC122), EDIV(FNC123), ESQR(FNC127), INT(FNC129)

5.2.2 In the case of programming tool (version) not applicable

Inapplicable programming tools can programme by setting alternative model.

1. Alternative model setting

Model to be programmed	Model to be set							Priority High → Low
FX3G PLC	FX3G	→	FX1N*1	→	FX2N*1	→	FX2	

*1. "FX2N" is selected when the FX-10P(-E) is used.

2. Contents of restrictions

- Programming is enabled only in the function ranges such as instructions, device ranges and program sizes available in a PLC selected as the alternative model.
- Use a programming tool that can select either FX3G to change parameters, i.e. memory capacity, file register capacity, etc.
- The built-in USB port cannot be used for programming communication.

5.2.3 Program transfer speed and programming tool

When either of the following interfaces is used for GX Developer (Ver.8.72A or later), writing and reading of programs and monitoring of devices can be executed at high speed (115.2 kbps) in FX3G PLCs.

1. Applicable interface

- Standard built-in port(RS-422) or function extension board FX3G-422-BD for RS-422
  When the RS-232C/RS-422 converter FX-232AWC-H is connected
- Function extension board FX3G-232-BD for RS-232C
- Special adapter FX3U-232ADP(-MB) for RS-232C

2. Communication speed setting by GX Developer

The communication speed can be set in the following position:
Select "Online" → "Transfer setup..." → "PC side I/F", and double-click the "Serial" icon.

3. In programming software not applicable to the FX3G Series

Communication is executed at 9,600 or 19,200 bps.

5.2.4 Cautions on connecting peripheral equipment by way of expansion board or special adapter.

When connecting peripheral equipment (programming tool or GOT [CPU direct connection]) by way of the FX3G-232-BD, FX3G-422-BD or FX3U-232ADP(-MB), set the connection channel (CH1 or CH2) as follows. If the connection channel is not specified with the status below, communication error may occur in the connected peripheral equipment.

→ **For details, refer to the Data Communication Edition.**

- Set to "K0" the special data register for communication format setting of the channel connecting the peripheral equipment (CH1: D8400 or D8120, CH2: 8420).
- Set the communication parameter "PLC system [2]" of the channel connecting the peripheral equipment to "Not set" (as shown in the window below).

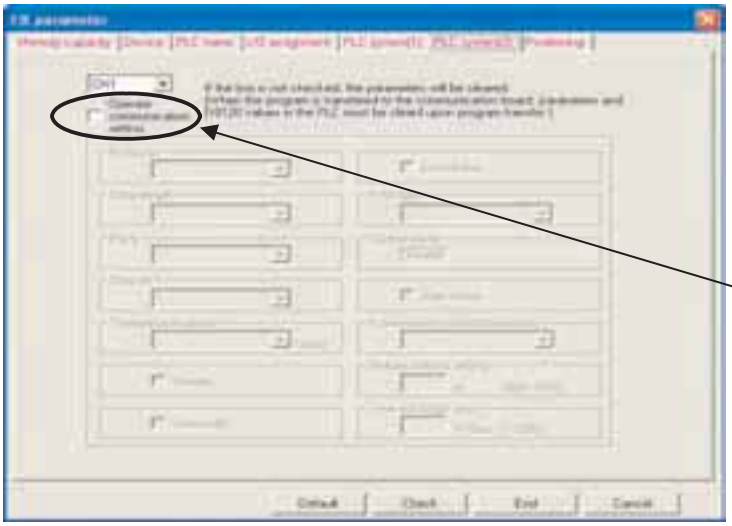

5.2.5 Cautions on write during RUN

In FX3G PLCs, write during RUN (program changes in the RUN mode) is enabled using the following programming tools.

→ **For the operating procedure of and cautions on write during RUN, refer to the manual of the used programming tool.**

Programming tools supporting write during RUN

Programming tool	Version	Remarks
GX Developer	Ver.2.00A or later	Supports write during RUN in the instruction and device ranges in FX2N PLCs Ver.1.00 or later.
	Ver.5.00A or later	Supports write during RUN in the instruction and device ranges in FX1N PLCs Ver.1.00 or later.
	Ver.8.72A or later	Supports write during RUN in the instruction and device ranges in FX3G PLCs Ver.1.00 or later.
FX-PCS/WIN	Ver.2.00 or later	Supports write during RUN in the instruction and device ranges in FX2N PLCs Ver.1.00 or later.
	Ver.4.00 or later	Supports write during RUN in the instruction and device ranges in FX1N PLCs Ver.1.00 or later.
FX-PCS/WIN-E	Ver.2.00 or later	Supports write during RUN in the instruction and device ranges in FX2N PLCs Ver.1.00 or later.
	Ver.3.00 or later	Supports write during RUN in the instruction and device ranges in FX1N PLCs Ver.1.00 or later.

Cautions on write during RUN

Item		Caution
Program memories which can be written in RUN mode		Built-in EEPROM and optional memory cassette (whose write protect switch is set to OFF)
Number of program steps which can be written for circuit change in RUN mode	GX Developer Ver.8.72A or later	256 steps or less after edition (addition/deletion) (including NOP immediately after circuit blocks except final circuit)
	• GX Developer Ver.8.70Y or former • FX-PCS/WIN(-E)	127 steps or less after edition (addition/deletion) (including NOP immediately after circuit blocks except final circuit)
Circuit blocks which cannot be written in RUN mode		Circuit blocks in which labels P and I are added, deleted or changed in edited circuits
		Circuit blocks in which 1-ms timers (T246 to T249 and T256 to T319) are added in edited circuits
		Circuit blocks in which the following instructions are included in edited circuits • Instruction to output high speed counters C235 to C255 (OUT instruction) • TBL (FNC152) instruction

<table>
<tr><th>Item</th><th>Caution</th></tr>
<tr><td rowspan="5">Circuit blocks which cannot be written in RUN mode</td><td>Avoid write during RUN to a circuit block including the following instructions during execution.
If write during RUN is executed to such a circuit block, the PLC decelerates and stops pulse output.
• DSZR (FNC150), ZRN (FNC156), PLSV (FNC157) instruction [with acceleration/deceleration operation], DRVI (FNC158) and/or DRVA (FNC159) instruction</td></tr>
<tr><td>Avoid write during RUN to a circuit block including the following instruction during execution.
If write during RUN is executed to such a circuit block, the PLC immediately stops pulse output.
• PLSV (FNC157) instruction [without acceleration/deceleration operation]</td></tr>
<tr><td>Avoid write during RUN to a circuit block including the following instructions during execution of communication.
If write during RUN is executed to such a circuit block, the PLC may stop communication after that.
If the PLC stops communication, set the PLC to the STOP mode once, and then set it to the RUN mode again.
• IVCK (FNC270), IVDR (FNC271), IVRD (FNC272) and/or IVWR (FNC273) instruction</td></tr>
<tr><td>• Instructions for falling edge pulse
When write during RUN is completed for a circuit including an instruction for falling edge pulse (LDF, ANDF, or ORF instruction), the instruction for falling edge pulse is not executed without regard to the ON/OFF status of the target device.
When write during RUN is completed for a circuit including an instruction for falling edge pulse (PLF instruction), the instruction for falling edge pulse is not executed without regard to the ON/OFF status of the device that is set as the operation condition.
It is necessary to set to ON the target device or operation condition device once and then set it to OFF for executing the instruction for falling edge pulse.
• Instructions for rising edge pulse
When write during RUN is completed for a circuit including an instruction for rising edge pulse, the instruction for rising edge pulse is executed if a target device of the instruction for rising edge pulse or the operation condition device is ON.
Target instructions for rising edge pulse: LDP, ANDP, ORP, and pulse operation type applied instructions (such as MOVP)
<table>
<tr><th>Contact ON/OFF status (while write during RUN is executed)</th><th>Instruction for rising edge pulse</th><th>Instruction for falling edge pulse</th></tr>
<tr><td>OFF</td><td>Not executed</td><td>Not executed</td></tr>
<tr><td>ON</td><td>Executed*1</td><td>Not executed</td></tr>
</table>
*1 The PLS instruction is not executed.</td></tr>
<tr><td>Circuit blocks which require attention on operation after write during RUN</td><td>Writing in RUN mode to circuit blocks including the following instructions results in the following operation
• MEP instruction (Conversion of operation result to leading edge pulse instruction)
When completing Write during RUN to a circuit including the MEP instruction, the execution result of the MEP instruction turns ON (conducting state) if the operation result up to the MEP instruction is ON.
• MEF instruction (Conversion of operation result to trailing edge pulse instruction)
When completing Write during RUN to a circuit including the MEF instruction, the execution result of the MEF instruction turns OFF (nonconducting state) regardless of the operation result (ON or OFF) up to the MEF instruction.
When the operation result up to the MEF instruction is set to ON once and then set to OFF, the execution result of the MEF instruction turns ON (conducting state)
<table>
<tr><th>Operation result up to MEP/MEF instruction</th><th>MEP instruction</th><th>MEF instruction</th></tr>
<tr><td>OFF</td><td>OFF (nonconducting)</td><td>OFF (nonconducting)</td></tr>
<tr><td>ON</td><td>ON (conducting)</td><td>OFF (nonconducting)</td></tr>
</table></td></tr>
<tr><td>Others</td><td>• When writing during RUN with GX Developer Ver. 8.72A or later, the program is as follows.
When the number of program steps is reduced by deletion of contacts, coils and applied instructions, the program capacity becomes smaller by as many as the reduced number of steps.</td></tr>
</table>

5.3 Precautions on Use of (Built-in USB) Programming Port

Make sure to set the contents described in this section when executing circuit monitor, device registration monitor, program reading/writing, etc. in the FX3G PLC using the (built-in USB) programming port and GX Developer Ver. 8.72A or later. For GX Developer is prior to Ver. 8.72A, communication using the (built-in USB) programming port is not available.

5.3.1 Installation of USB driver (GX Developer Ver. 8.72A or later)

It is necessary to install the USB driver to execute USB communication using the (built-in USB) programming port.
For the USB driver installation method and procedure, refer to the following manual.

→ **GX Developer Operating Manual (Startup)**

5.3.2 Setting in GX Developer (Ver. 8.72A or later)

1. **Select [Online] → [Transfer setup...] to open the "Transfer setup" dialog box.**
2. **Double-click [Serial] in [PC side I/F] to open the "PC side I/F Serial setting" dialog box.**
3. **Select "USB (Built-in port)".**

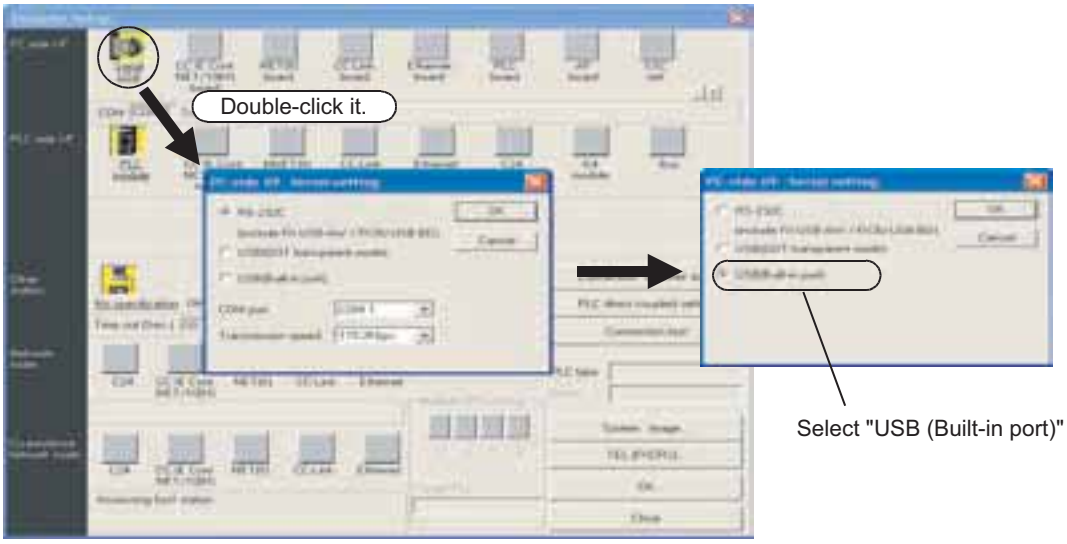

A display screen is the example of Ver.8.72A.

4. **Click the [OK] button to finish the setting.**

5.4 Cautions on using transparent function by way of USB in GOT1000 Series

When monitoring circuits, device registration, etc. or reading/writing programs in an FX3G PLC from GX Developer Ver.8.22Y or later using the transparent function by way of USB in the GOT1000 Series, make sure to execute the following setting.
If the following setting is not provided, a communication error occurs.

	GX Developer Ver.8.21X or former	GX Developer Ver8.22Y or later*1
When using transparent function by way of USB in GOT1000 Series	Not supported (not available)	Setting shown below is required.
When using transparent function by way of RS-232 in GOT1000 Series	Set "COM port" and "Transmission speed" on "PC side I/F Serial setting" dialog box.	Select "RS-232C" in setting shown below, and set "COM port" and "Transmission speed".
When directly connecting GX Developer to PLC		

*1. GX Developer Ver.8.72A or later supports the FX3G Series.

Setting in GX Developer (Ver. 8.22Y or later)

1. **Select [Online] → [Transfer setup...] to open the "Transfer setup" dialog box.**
2. **Double-click [Serial] in [PC side I/F] to open the "PC side I/F Serial setting" dialog box.**
3. **Select "USB (GOT Transparent mode)".**

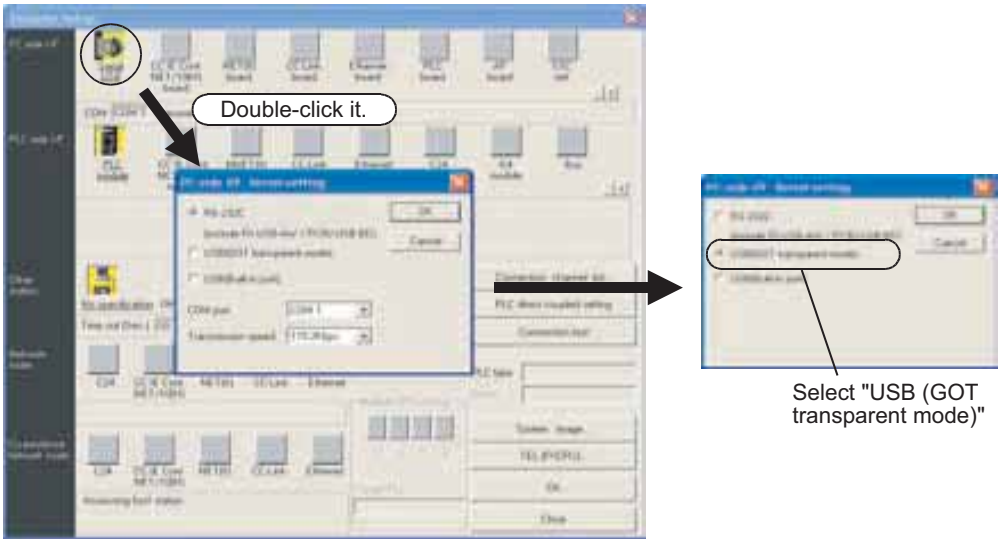

A display screen is the example of Ver.8.72A.

4. **Click the [OK] button to finish the setting.**

5.5 Cautions on using transparent port (2-port) function of GOT-F900 Series

When monitoring circuits, device registration, etc. in an FX3G PLC from GX Developer Ver. 8.72A or later using the transparent (2-port) function in the GOT-F900 Series, make sure to execute the following setting. If the following setting is not provided, monitoring cannot be executed normally.

	GX Developer Ver.8.12N or earlier	GX Developer Ver.8.22Y or later	GX Developer Ver.8.72A or later
When using transparent function in GOT-F900 Series	Setting shown below is not required.	Setting shown below is not required.	Select "RS-232C" on "PC side I/F Serial setting" dialog box, and execute setting shown below.
When directly connecting GX Developer to PLC	Set "COM port" and "Transmission speed" on "PC side I/F Serial setting" dialog box.	Select "RS-232C" on "PC side I/F Serial setting" dialog box, and set "COM port" and "Transmission speed."	Select "RS-232C" on "PC side I/F Serial setting" dialog box, and set "COM port" and "Transmission speed."

Setting in GX Developer (Ver.8.22Y or later)

1. **Select [Online] → [Transfer setup...] to open the "Transfer Setup" dialog box.**
2. **Double-click [PLC module] in [PLC side I/F] to open the [PLC side I/F Detailed setting of PLC module] dialog box.**
3. **Put a check mark to the check box [via GOT-F900 transparent mode] as shown below**

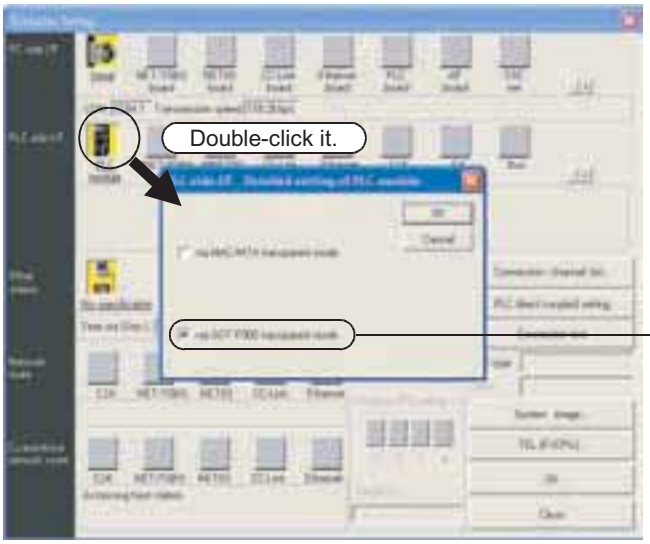

A display screen is the example of Ver.8.72A.

4. **Click the [OK] button to finish the setting.**

5.6 Other Peripheral Equipment Applicability

5.6.1 Other Peripheral Equipment Applicability

Model name	Applicability	Remarks
GOT1000 Series	Applicable	This series is compatible with the FX3G PLC when GT Designer2 Ver. 2.85P or later is used. GT15 and GT11: Standard monitor OS[03.14.**]or later Communication driver MELSEC-FX[03.14.**]or later Option OS List editor for MELSEC-FX[03.14.**]or later GT10: Standard monitor OS[01.10.**]or later Communication driver MELSEC-FX[01.06.**]or later This series is subject to the following restrictions when connected using unsupported standard monitor OS, communication driver or option OS. **Contents of restrictions** • Programming is enabled only in the function ranges such as instructions, device ranges and program sizes available in the FX1N and FX1NC PLCs. • The list editor function for MELSEC-FX is not available. When using the list editor function for MELSEC-FX, upgrade the standard monitor OS, communication driver and option OS to the version compatible with the FX3G PLC. Check the applicability of other items in the GOT manual.
F940WGOT	Not available	The following restriction applies when connected. **Contents of restrictions** • Programming is enabled only in the function ranges such as instructions, device ranges and program sizes available in the FX1N and FX1NC PLCs. **→ For applicable models, refer to the GOT manual.** For connection using the 2-port interface function*1, refer to Section 5.5.
F940GOT F940 Handy GOT	Not available	
F930GOT(-K)	Not available	
F920GOT(-K)	Not available	
ET-940	Not available	
FX-10DM(-SET0)	Not available	The following restriction applies when connected. **Contents of restrictions** • Programming is enabled only in the function ranges such as instructions, device ranges and program sizes available in the FX1N and FX1NC PLCs. **→ For supported models and device ranges, refer to the FX-10DM USER'S MANUAL (Manual No. JY992D86401).**
FX-10DU	Not available	The following restriction applies when connected. **Contents of restrictions** It is limited to the device range and function range supported by the highest class model (FX1N or FX2N) applicable in the product version. **→ For supported models and device ranges, refer to the FX-10DU-E/FX-20DU-E User's Manual (Manual No. JY992D54801).**

*1. The F940GOT and ET-940 whose version is former than Ver.1.10 do not support the transparent (2-port) function of the GX Developer.

6. Examination of System Configuration

6.1 Configuration of a Whole System

The configuration of a whole system is shown below as an example.

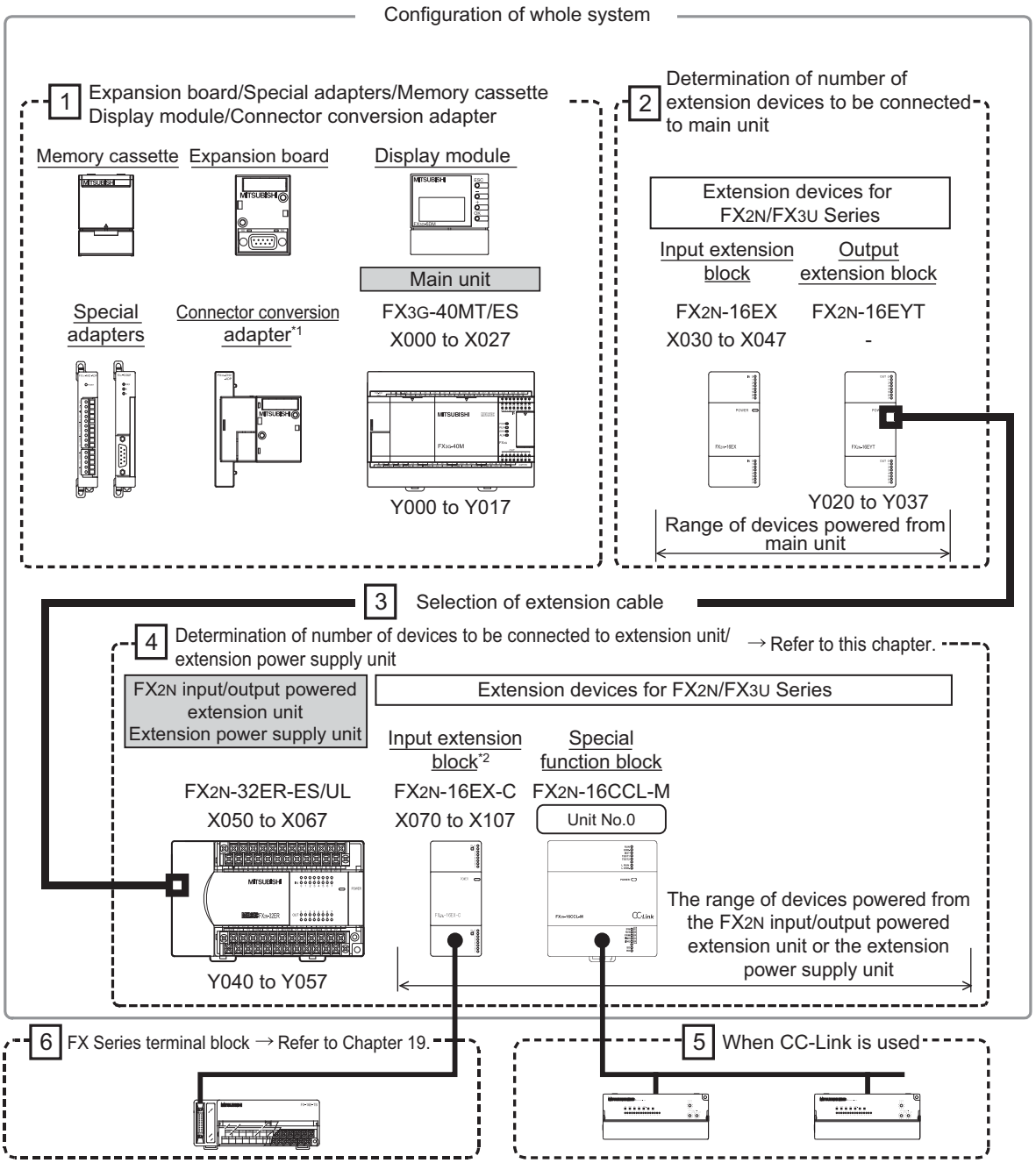

*1 The connector conversion adapter is required to use a special adapter.
*2 Included in the number of units connectable to the main unit when the input extension block (including the FX2N-8ER-ES/UL and FX2N-8ER) is used and the extension power supply unit is located on the upstream side.

6.1.1 Expansion board/connector conversion adapter/memory cassette/display module configuration

The connection positions and number of expansion boards, connector conversion adapter and memory cassette configuration vary depending on the number of points in main units. For details, refer to the description below.

- In the case of the main units(40/60 point type)

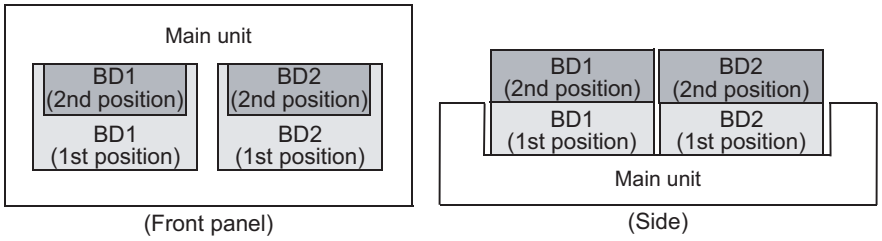

Model name	Available connection position			
	BD1 (1st position)	BD1 (2nd position)	BD2 (1st position)	BD2 (2nd position)
Expansion board (Except FX3G-8AV-BD)	✓	-	✓	-
FX3G-8AV-BD	-	-	✓	-
Connector conversion adapter (FX3G-CNV-ADP)	✓	-	-	-
Memory cassette*1	✓*2		✓*2*3	
Display module*1	-	-	✓*4*5	

*1. When the memory cassette and display module are used together, the transfer function of the memory cassette is not available. Use the display module to transfer data stored in the memory cassette.

*2. Can be connected in any position however only one device can be connected at one time.

*3. The memory cassette cannot be connected when the display module is connected to the BD2 (1st position).

*4. Only the BD2 (1st position) and the BD2 (2nd position) can be used for connection. Only one display module can be connected to the main unit.

*5. The display module cannot be connected when the memory cassette is connected to the BD2 (1st position).

- In the case of the main units(14/24 point type)

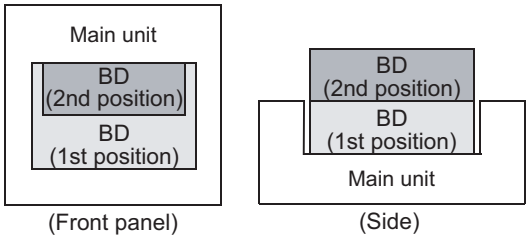

Model name	Available connection position	
	BD (1st position)	BD (2nd position)
Expansion board Connector conversion adapter (FX3G-CNV-ADP)	✓	-
Memory cassette	✓*1	✓*1*2
Display module	✓*1	✓*1*3

*1. Can be connected in either position only one device can be at one time.

*2. The memory cassette cannot be connected when the display module is connected to the BD (1st position).

*3. The display module cannot be connected when the memory cassette is connected to the BD (1st position).

6.2 Rules of System Configuration

The system configuration must meet the following four requirements.

1 Number of input/output points

The total number of input and output points should be 256 or less in the whole system.

→ **For details, refer to 6.3 Number of Input/Output Points and Maximum Number of Input/Output Points.**

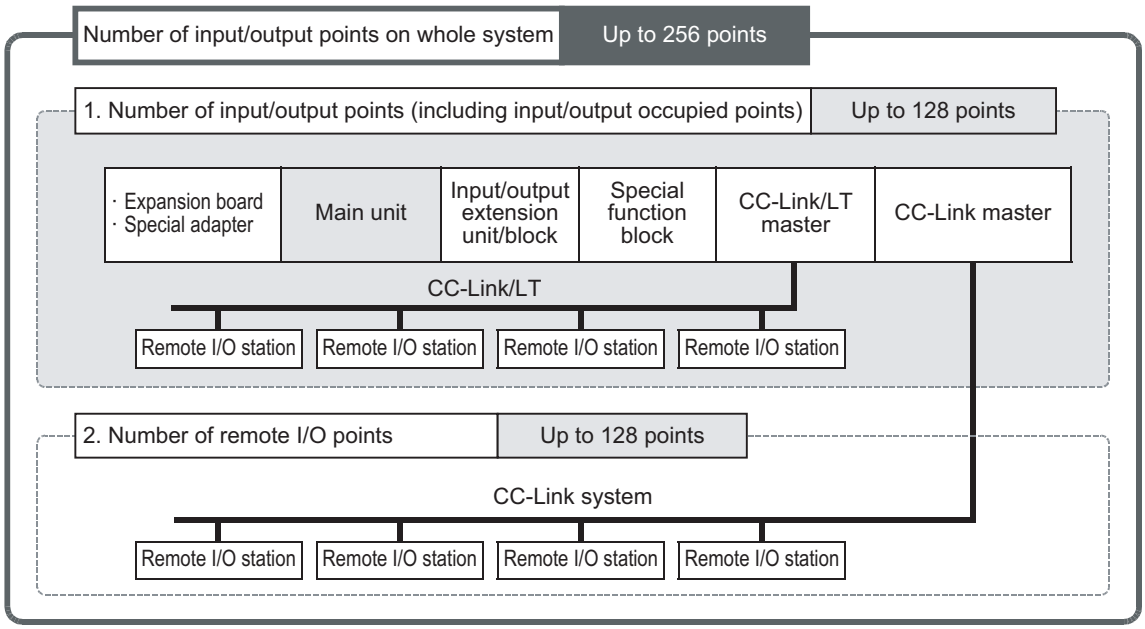

2 Number of connected special extension devices

The figure below shows the number of connectable expansion boards, special adapters, extension power supply units and special function blocks. The connector conversion adapter (FX3G-CNV-ADP) is required as the expansion board when special adapters are connected.

→ **For details, refer to 6.4 Number of Connected Extension Devices (Including Extension Cable).**

- FX3G Main units (40/60 point type)

Special adapter (analog)	Special adapter (communication)	Expansion board	Main unit 40/60 point type	Input/output powered extension unit	Extension power supply unit	Special function block
Up to 2 units	Up to 2 units	Up to 2 units		Up to 2 units	Only 1 unit	Up to 8 units

- FX3G Main units (14/24 point type)

Special adapter (analog)	Special adapter (communication)	Expansion board	Main unit 14/24 point type	Input/output powered extension unit	Extension power supply unit	Special function block
Only 1 unit	Only 1 unit	Only 1 unit		Up to 2 units	Only 1 unit	Up to 8 units

3 Connection restriction and calculation of current consumption

The number of points and number of units connected are restricted by the number of extension blocks connected to the main unit.
The built-in power supply of the input/output powered extension unit and extension power supply unit supplies the power to a unit/block/board extended to the corresponding unit. The built-in power supply refers to the 24V DC service power supply, 5V DC power supply and internal 24V DC power supply.The consumed power varies depending on the type of extended unit/block/board.

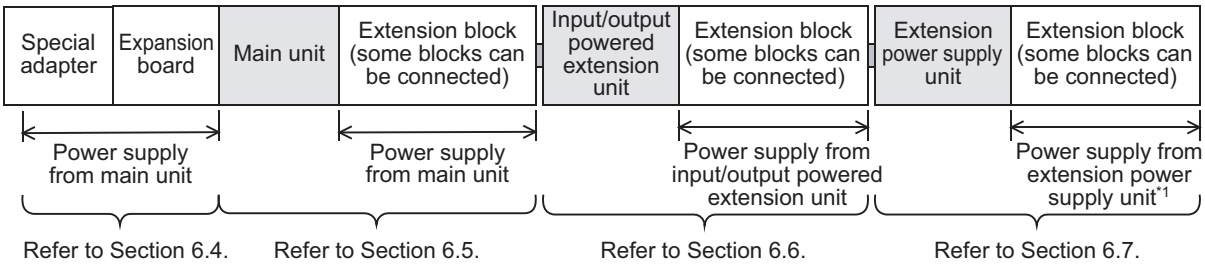

*1. When connecting an input extension block on the downstream side of an extension power supply unit, supply the power to the input extension block from the nearest main unit on the upstream side, or from an input/output powered extension unit on the upstream side of the extension power supply unit.
In the example above, the input/output powered extension unit supplies the power to extension blocks.

→ **For details, refer to 6.5 Expansion of Main Unit.**
→ **For details, refer to 6.6 Expansion of FX2N Series I/O Powered Extension Unit.**
→ **For details, refer to 6.7 Expansion of Extension Power Supply Unit (FX3U-1PSU-5V).**

4 Other restrictions

- Restrictions in the use of the FX3G-422-BD
  - When connecting a device (such as GOT) which consumes an internal 5V DC to each of the RS-422 port built in the main unit and the FX3G-422-BD at the same time, avoid continuous use of either device. If both devices are used continuously, their life may be shortened due to heat generation.

    <Configuration example 1>
    RS-422 port built-in main unit + GT1020LBL (5V DC type)
    FX3G-422-BD + GT1020LBL (5V DC type)
    Avoid continuous use of two GT1020LBL (5V DC type) units.

  - When connecting a device (such as GOT) which consumes an internal 5V DC to each of two FX3G-422-BD units connected to the (40-point/60-point type) main unit, avoid continuous use of either device. If both devices are used continuously, their life may be shortened due to heat generation.

    <Configuration example 2>
    When connecting the 40-point type main unit and two FX3G-422-BD units
    FX3G-422-BD + GT1020LBL (5V DC type)
    FX3G-422-BD + GT1020LBL (5V DC type)
    Avoid continuous use of two GT1020LBL (5V DC type) units.

  - It is not allowable to connect a device (such as GOT) which consumes an internal 5V DC to each of the RS-422 port in the (40-point/60-point type) main unit and two FX3G-422-BD units (3 channels in total) at the same time.

6.3 Number of Input/Output Points and Maximum Number of Input/Output Points

6.3.1 Calculation of number of input/output points

To obtain the total number of input/output points, count the input/output points of input/output powered extension units/blocks and the input/output occupied points of special function blocks.
The number of remote I/O points on CC-Link network must be excluded.

1 Total the number of input/output points on the main unit and the number of those on the input/output powered extension units/blocks.

To obtain the total number of input/output points, count the input points (X000 and more) and output points (Y000 and more) of the main unit and input/output powered extension units/blocks.
The number of input/output points of each type of device is shown on the list below.

→ **The list of numbers of input/output points is shown in Section 6.8.**

2 Count the input/output points of the remote I/O stations connected on FX2N-64CL-M network.

Add the number of remote I/O points to the number of input/output points from the main unit and input/output powered extension units/blocks calculated in the above step.

→ **For the remote I/O point calculation method, refer to the FX2N-64CL-M manual.**

3 Count the number of input/output occupied points of special function blocks.

The number of occupied input/output points per unit is 8.
The number of occupied input/output points of each type of device can be obtained by the following formula or from the list shown below.

→ **For a list of occupied input/output points, refer to Section 6.8.**

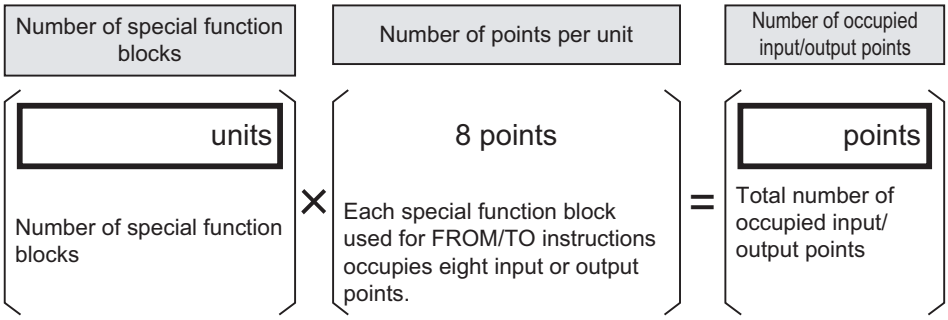

Observe the following instructions when using the following products.

- FX2N-16CCL-M(CC-Link master)
  When more than one master station is connected, a remote I/O station cannot be connected to the 2nd and following master stations.
- FX3U-64CCL
  Only one FX3U-64CCL unit can be connected to a single PLC main unit

4 Calculate the total number of input/output points.

Total the number of points counted in Steps 1, 2 and 3, and check that it does not exceed 128 points (maximum number of input/output points).

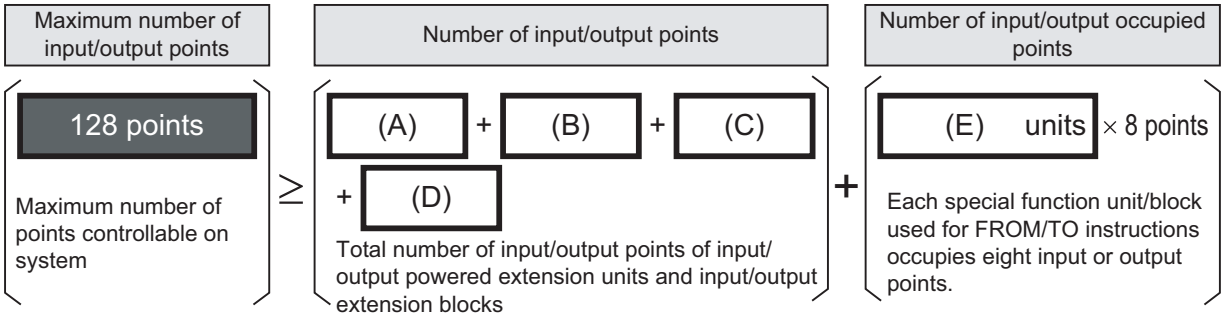

(A) : Number of input/output points of main unit
(B) : Number of input/output points of input/output powered extension units
(C) : Number of input/output points of input/output extension blocks
(D) : Number of remote I/O points of FX2N-64CL-M
(E) : Number of special function blocks

5 When CC-Link master is used, count the remote I/O points.

When CC-Link is used, the total number of input/output points of the remote I/O stations connected on the network and the number of input/output points calculated in the previous step are 256 or less.

1. FX2N-16CCL-M (CC-Link master)

Calculate the number of remote I/O points connected on the network in the following step.

6.3.2 Maximum number of input/output points when CC-Link master is used

1. Calculation of maximum number of input/output points

When CC-Link master block is used, the following maximum number of input/output points can be connected.

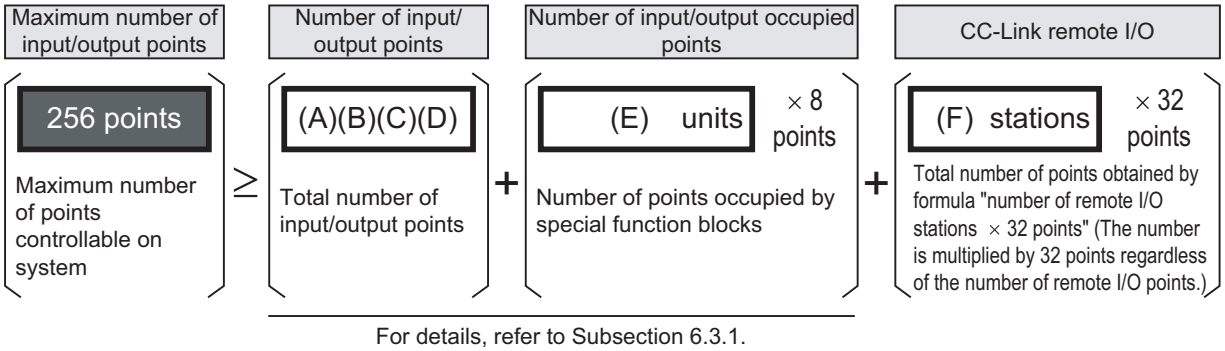

For details, refer to Subsection 6.3.1.

(A) : Number of input/output points of main unit
(B) : Number of input/output points of input/output powered extension units
(C) : Number of input/output points of input/output extension blocks
(D) : Number of remote I/O points of FX2N-64CL-M
(E) : Number of input/output points occupied by special function blocks
(F) : Number of remote I/O stations (units) connected to CC-Link master

*1. When four 32-point type remote I/O stations are used, the number of CC-Link remote I/O points reaches the maximum number.
The number of CC-Link points is calculated by the formula "32 points × number of stations" even when remote I/O stations having less than 32 points are used.
For details, refer to FX2N-16CCL-M User's Manual.

2. Procedures for calculating number of input/output points based on example of system configuration

For the main unit, input/output powered extension units/blocks and CC-Link remote I/O stations, the number of input/output points and the total number of points are restricted.

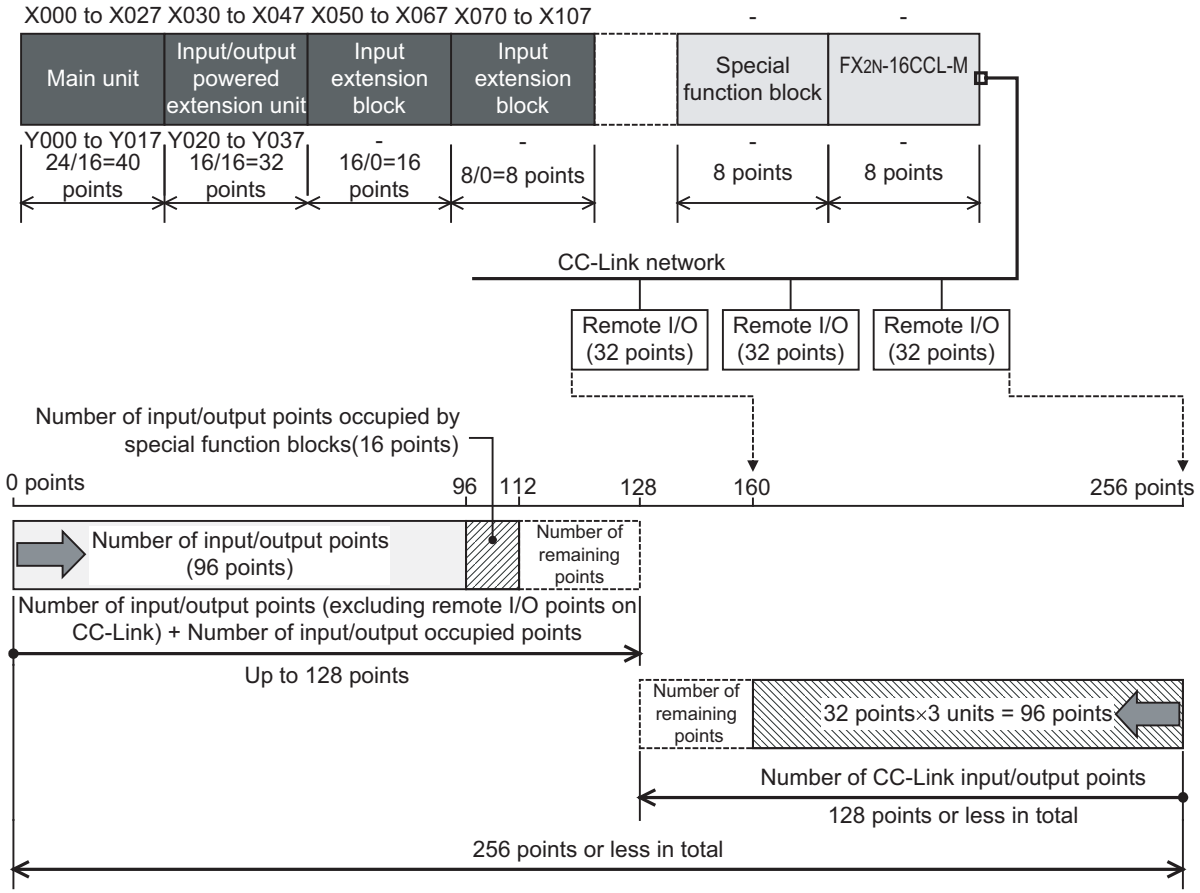

6.4 Number of Connected Extension Devices (Including Extension Cable)

6.4.1 Number of connectable expansion boards and special adapters

The number of connectable expansion boards and special adapters varies depending on the number of points in the main unit. The connector conversion adapter (FX3G-CNV-ADP) is required to connect the special adapter.

→ **For assignment of communication channels, refer to Section 7.3.**

- In the case of Main units (40/60 point type)

Use of expansion board	Number of connectable expansion boards		Number of connectable special adapters of each type	
			Communication special adapters	Analog special adapters
When expansion board is not used	0		2 units	2 units
When expansion board is used	1 unit	Communication expansion board*1	1 unit	2 units
		Analog expansion board	2 units	1 unit
	2 units*2		Cannot be connected.	Cannot be connected.

*1. FX3G-8AV-BD included.

*2. Only one FX3G-8AV-BD can be connected to a single PLC main unit.

- In the case of Main units (14/24 point type)

Use of expansion board	Number of connectable expansion boards	Number of connectable special adapters of each type	
		Communication special adapters	Analog special adapters
When expansion board is not used	0	1 unit	1 unit
When expansion board is used	1 unit	Cannot be connected.	Cannot be connected.

6.4.2 Input/output powered extension units

Up to 2 input/output powered extension units can be connected in one system.

6.4.3 Extension Power Supply Unit

Only one extension power supply unit (FX3U-1PSU-5V) unit can be connected to a single PLC main unit.

6.4.4 Special function blocks

Up to 8 special function units/blocks can be connected in one system.

When connecting the following products, take into consideration the combination, number of units/blocks and connecting order.

Type	Limitations
FX3U-64CCL	Only one FX3U-64CCL unit can be connected to a single PLC main unit.
FX2N-16CCL-M	When some units are used, a remote I/O station cannot be connected to the second and following master stations.
FX2N-2AD FX2N-2DA	When any of these products is connected to a FX2N Series input/output powered extension unit, the current consumption is restricted. The total current consumption of FX2N-2AD and FX2N-2DA must be the following value or less. - FX2N-32E□: 190mA or less - FX2N-48E□: 300mA or less

6.4.5 Extension cable

One extension cable can be used in a system.
The FX2N-CNV-BC is required when the extension block is connected.

- FX0N-65EC(650mm(25.59"))
- FX0N-30EC(300mm(11.81"))

6.5 Expansion of Main Unit

The allowable extension to the main unit varies depending on used extension blocks as described below.

1. When connecting only the input/output extension block

Input/output extension blocks of up to 32 points can be connected.
However, when the extension power supply unit (FX3U-1PSU-5V) is used and the main unit is the nearest upstream unit to the extension power supply unit, make sure that the number of points including the input extension block (including the FX2N-8ER-ES/UL and FX2N-8ER) extended to the extension power supply unit does not exceed 32.

2. When connecting the input/output extension block and special function block

Input/output extension blocks of up to 16 points can be connected.
However, when the extension power supply unit (FX3U-1PSU-5V) is used and the main unit is the nearest upstream unit to the extension power supply unit, make sure that the number of points including the input extension block (including the FX2N-8ER-ES/UL and FX2N-8ER) extended to the extension power supply unit does not exceed 16.

Only 1 special function block can be connected.

3. When connecting only the special function block

Up to 2 special function blocks can be connected.

When further extension is required, judge whether extension is possible using one of the following methods:

- Using the 24V DC service power supply (400mA) of the main unit
- Using an input/output powered extension unit
- Using an extension power supply unit

For details, refer to the following.

→ **Refer to 6.5.1 When adding input/output extension blocks using the 24V DC service power supply of the main unit.**
→ **Refer to 6.6 Expansion of FX2N Series I/O Powered Extension Unit.**
→ **Refer to 6.7 Expansion of Extension Power Supply Unit (FX3U-1PSU-5V).**

6.5.1 When adding input/output extension blocks using the 24V DC service power supply of the main unit

If extension is not allowed due to restrictions in connection to the main unit described in the preceding subsection, extension blocks can be added using the 24V DC service power supply of the main unit.
For adding extension blocks using the 24V DC service power supply, it is necessary to examine again whether extension is possible for all of extension blocks selected in the preceding subsection and extension blocks to be selected in this subsection.
Note that only up to two network-related special function blocks can be connected including extension to the main unit.

1 Confirm the priority of all extension blocks to be connected to the main unit.

The priority is set to each extension block to be connected, and required to judge the possibility of extension to the main unit. The priority is determined by the extension block type without regard to the connection position.
When the extension power supply unit (FX3U-1PSU-5V) is used and the nearest upstream unit to the extension power supply unit is the main unit, the priority should be considered also for input extension blocks (including the FX2N-8ER-ES/UL and FX2N-8ER) extended to the extension power supply unit.

<Priority>

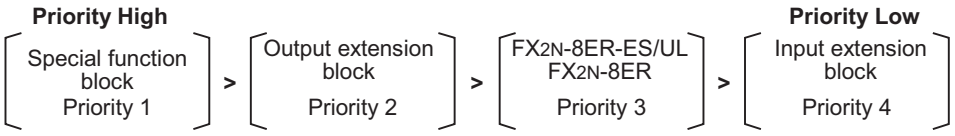

2 Judge whether extension to the main unit is possible.

Judge the possibility of extension to the main unit for all extension blocks in turn, starting from the extension block having the highest priority confirmed in step 1. Consider that 16 input/output points are provided in each of the FX2N-8ER-ES/UL and FX2N-8ER. Eight output points have higher priority over 8 input points. Refer to the preceding subsection for judgment about the possibility of extension to the main unit.

3 Check whether extension from the 24V DC service power supply is possible.

Check using the quick reference matrix shown below whether the number of points whose extension is judged as impossible in step 2 can be added using the 24V DC service power supply.
A special function block is handled in the same way as 16 output points.

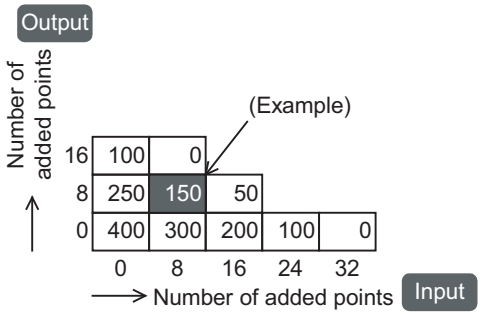

Example: When 8 input points and 8 output points are connected, the current of the 24V DC service power supply becomes 150mA or less.

4 Confirm the current capacity of the 24V DC service power supply from the value shown in the quick reference matrix.

This remaining power supply capacity (current) can be used as power supply for external loads (such as sensors) by the user.
If it is not possible to connect input/output extension blocks even using the 24V DC service power supply of the main unit, consider adding an input/output powered extension unit to the system.

→ **Refer to 6.6 Expansion of FX2N Series I/O Powered Extension Unit.**

6.5.2 Selection example 1 using the 24V DC service power supply of the main unit

This subsection explains an example in which 8 input points and 16 output points are added to the following system configuration using the 24V DC service power supply of the main unit.

<Example of configuration>

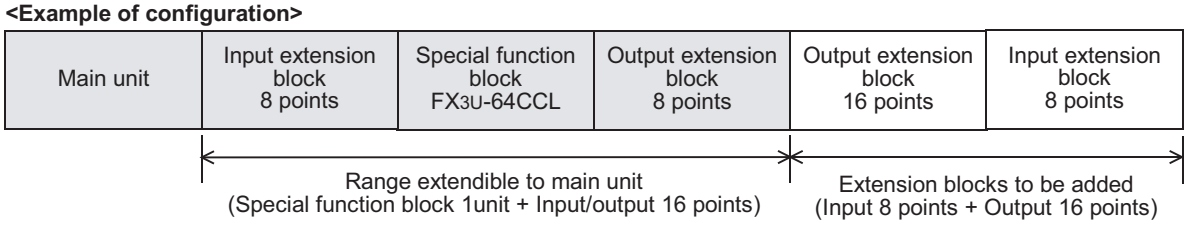

1 Confirm the priority of all extension blocks to be connected to the main unit.

The priority is determined by the extension block type without regard to the connection position from the main unit as shown below.

<Priority>

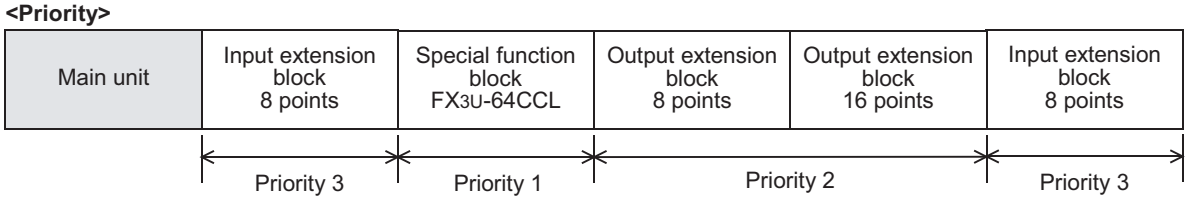

2 Judge whether extension to the main unit is possible.

Judge the possibility of extension to the main unit for all extension blocks in turn, starting from a block having the highest priority confirmed in step 1.
In this example, due to the restriction "one special extension block and 16 points in input/output extension block", the only FX3U-64CCL (priority 1) and 16 points of the output extension block (priority 2) can be connected to the main unit.

3 Check whether extension from the 24V DC service power supply is possible.

Check using the quick reference matrix whether 16 input points and 8 output points whose extension is judged as impossible in step 2 can be added.

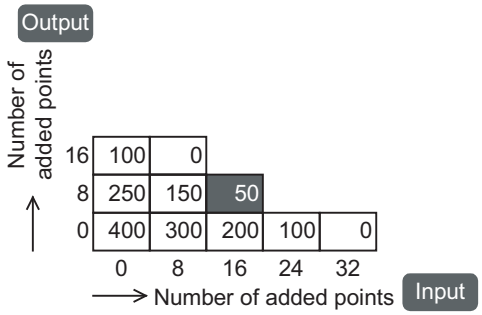

After 16 input points and 8 output points are connected, the remaining current of the 24V DC service power supply is 50mA or less. Accordingly, it is possible to add 16 input points and 8 output points.
The remaining power supply capacity (50mA) can be used as power supply for external loads (such as sensors) by the user.

6.5.3 Selection example 2 using the 24V DC service power supply of the main unit

This subsection explains an example in which FX2N-2AD and 8 output points are added to the following system configuration using the 24V DC service power supply of the main unit.

<Example of configuration>

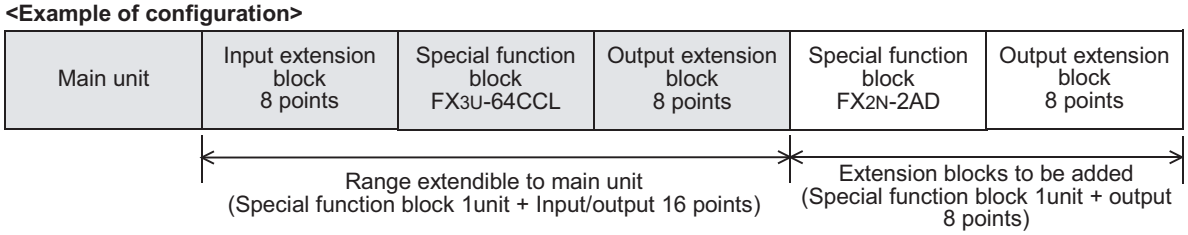

1 Confirm the priority of all extension blocks to be connected to the main unit.

The priority is determined by the extension block type without regard to the connection position from the main unit as shown below.

<Priority>

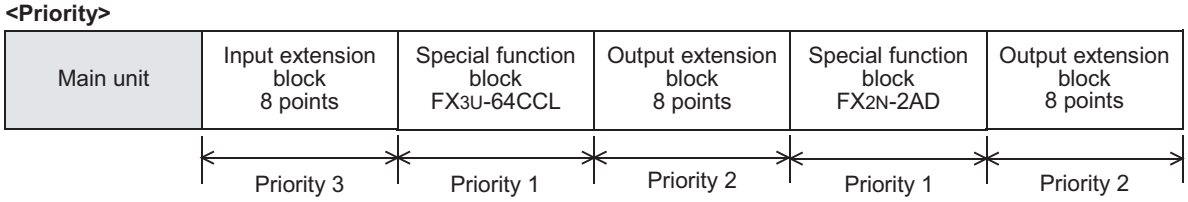

2 Judge whether extension to the main unit is possible.

Judge the possibility of extension to the main unit for all extension blocks in turn, starting from a block having the highest priority confirmed in step 1.
In this example, due to the restriction "two special function blocks", only the FX3U-64CCL (priority 1) and FX2N-2AD (priority 1) can be connected to the main unit.

3 Check whether extension from the 24V DC service power supply is possible.

Check using the quick reference matrix whether 8 input points and 16 output points whose extension is judged as impossible in step 2 can be added.

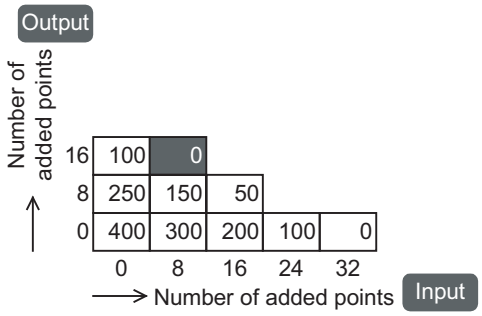

After 8 input points and 16 output points are connected, the remaining current of the 24V DC service power supply is 50mA or less. Accordingly, it is possible to add 8 input points and 16 output points.

6.6 Expansion of FX2N Series I/O Powered Extension Unit

When extension is not possible due to the main unit connection restrictions described in the preceding section and extension of input/output is required, select the input/output powered extension unit.
Since input/output powered extension units have built-in input/output terminals, reexamine the input/output devices connected to the main unit to ensure the required number of points.

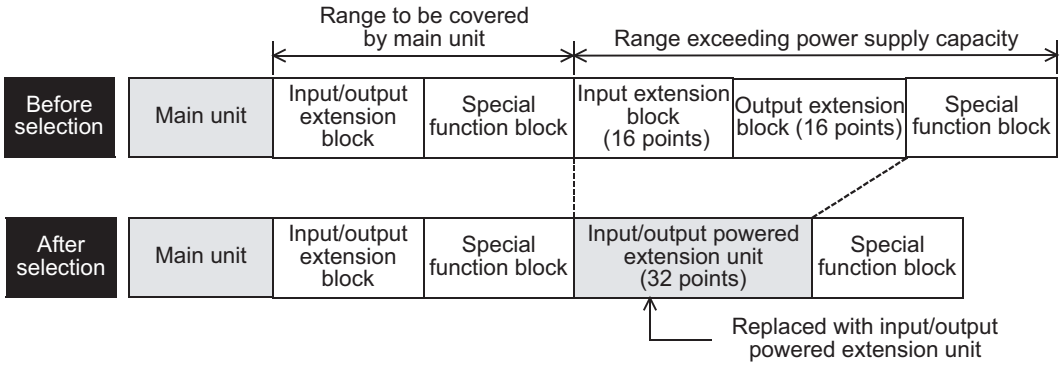

Determine whether extension devices can be connected to the input/output powered extension unit by the following method.

- When only input/output extension devices are added, use the quick reference matrix.
  → **Refer to 6.6.1 Quick reference matrix (when only input/output devices are added).**
- When also special extension devices are added, calculate the current consumption to ensure that the total current to be consumed by the added extension devices can be supplied by the built-in power supply.

→ **Refer to 6.6.2 When special extension devices are also added (calculation of current consumption).**

6.6.1 Quick reference matrix (when only input/output devices are added)

In the following quick reference matrix, the value at the intersection of the number of input points to be added (horizontal axis) with the number of output points to be added (vertical axis) indicates the remaining power supply capacity.

1 Select the input/output extension block (number of points) to be connected to the main unit.

Check that the number of input/output points can be added.
When connecting the FX3U-1PSU-5V extension power supply unit to a system where the nearest upstream unit to the FX3U-1PSU-5V is an input/output powered extension unit, include the current consumption by the input extension blocks (including FX2N-8ER-ES/UL and FX2N-8ER) connected to the FX3U-1PSU-5V when calculating the total current consumption of the input/output powered extension unit.

1. AC power supply/DC input type

1) FX2N-32ER, FX2N-32ET, FX2N-32ES
FX2N-32ER-ES/UL, FX2N-32ET-ESS/UL

AC power supply DC input type

FX2N-32E□

Output \ Input	0	8	16	24	32
24	25				
16	100	50	0		
8	175	125	75	25	
0	250	200	150	100	50

Number of added points ↑ / → Number of added points

(Example)

(Example) When a 16-input and 0-output point extension block is connected to FX2N-32E□, the current of the 24V DC service power supply becomes 150mA or less.

2) FX2N-48ER, FX2N-48ET
FX2N-48ER-ES/UL, FX2N-48ET-ESS/UL

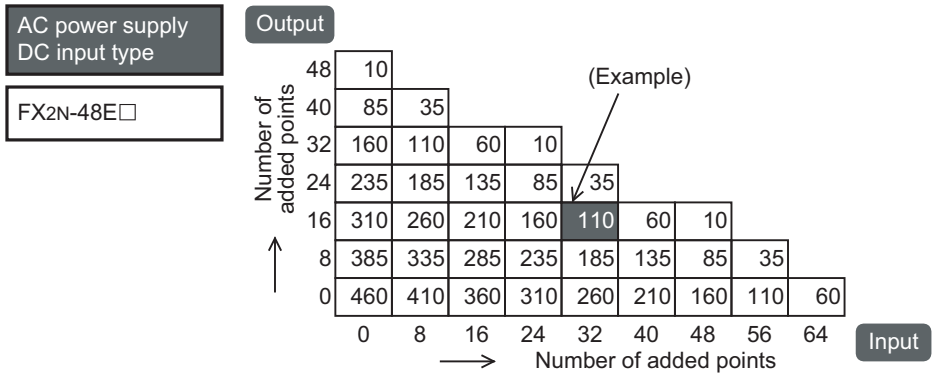

(Example) When a 32-input and 16-output point extension block is connected to FX2N-48E□, the current of 24V DC service power supply becomes 110mA or less.

2. AC power supply/AC input type

1) FX2N-48ER-UA1/UL
(24V DC service power supply is not provided.)

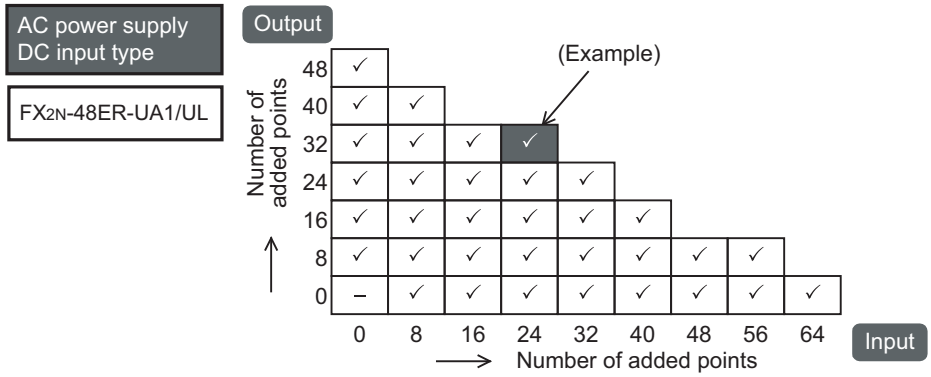

(Example) When adding 24 inputs to FX2N-48ER-UA1/UL, a maximum of 32 outputs are expandable

2 Check the current capacity of the 24V DC service power supply based on the value shown in the quick reference matrix.

1. In the case of AC power supply/DC input type

The remaining power supply capacity (current) can be used as a power supply to loads (sensors or the like). When special adapters and special function units/blocks are connected by external wiring, it is necessary to consider whether they can be covered by the remaining power supply capacity.

2. In the case of AC power supply/AC input type

24V DC service power supply is not provided.

3 When the power supply capacity is insufficient, connect another input/output powered extension unit.

When two input/output powered extension units or more are connected, calculate the power supply capacities of the input/output extension blocks and special function blocks connected to them, and check the capacity.

6.6.2 When special extension devices are also added (calculation of current consumption)

1 Select an input/output powered extension unit.

→ For the data on the number of input/output occupied points and current consumption of each type,refer to Section 6.8.

	Power supply classification	Classification	Number of connected units	Type	Number of input/ output points [points]	Capacity of built-in power supply	
						5V DC power supply [mA]	24V DC service power supply [mA]
					1 -1	1 -2	1 -3
1	With built-in power supply	B1 Input/output powered extension unit	-	FX2N-			
	Example of entry → FX2N-48ER-ES/UL				48	690	460

2 Enter the specifications for the products to be added.

Enter the data for the input/output extension blocks and special function blocks to be connected to the input/output powered extension unit, and calculate the current.

→ For data on the number of input/output occupied points and current consumption of each type, refer to Section 6.8.

	Power supply classification	Classification	Number of connected units	Type	Number of input/ output points [points]	Calculation of current consumption of built-in power supply	
						5V DC power supply [mA]	24V DC power supply [mA]
2	Enter the products connected to the input/ output powered extension unit	B2 Input/output extension block*1	-	FX2N-		-	
				FX2N-		-	
				FX2N-		-	
				FX2N-		-	
				FX2N-		-	
				FX2N-		-	
				FX2N-		-	
				FX2N-		-	
		C Special function unit/block	8*2	FX2N/FX3U-			
				FX2N/FX3U-			
				FX2N/FX3U-			
				FX2N/FX3U-			
				FX2N/FX3U-			
				FX2N/FX3U-			
				FX2N/FX3U-			
				FX2N/FX3U-			
					2 -1	2 -2	2 -3
	Calculate the totals						

*1. When connecting the FX3U-1PSU-5V extension power supply unit to a system where the nearest upstream unit to the FX3U-1PSU-5V is input/output powered extension unit, also enter the current consumption and number of occupied I/O points for the input extension blocks (including FX2N-8ER-ES/UL and FX2N-8ER) that are connected to the FX3U-1PSU-5V.

*2. A maximum of 8 special function blocks are connectable, including the main unit and extension power supply unit.

3 Determine whether FX2N-2AD and FX2N-2DA can be added.

Determine the number of analog special function blocks (FX2N-2AD and FX2N-2DA) to be connected to the input/output powered extension unit by the following method.

- When connecting to FX2N-32E□

Analog special function block		Total current consumption	
FX2N-2AD	FX2N-2DA		
50mA × [ ] units	+ 85mA × [ ] units	= [ ] mA	≤ 190mA

- When connecting to FX2N-48E□

Analog special function block		Total current consumption	
FX2N-2AD	FX2N-2DA		
50mA × [ ] units	+ 85mA × [ ] units	= [ ] mA	≤ 300mA

4 Determine whether the devices can be added to the input/output powered extension unit.

Calculate the current to confirm whether the selected extension devices can be connected.

1. Calculate the current consumption of the built-in 24V DC power supply (24V DC service power supply).

The value obtained by this calculation (when the value is positive) indicates the remaining capacity of 24V DC service power supply, and the capacity can be used for external loads.

Capacity of 24V DC power supply		Current consumption		Calculation result	
Input/output powered extension unit		Total of current consumed by extension devices			
① -3 mA	-	② -3 mA	=	[ ] mA	≥ 0mA

2. Calculate the current consumption of the built-in 5V DC power supply.

Capacity of 5V DC power supply		Current consumption		Calculation result	
Input/output powered extension unit		Total of current consumed by extension devices			
① -2 mA	-	② -2 mA	=	[ ] mA	≥ 0mA

If the calculation results for the current consumption of the 24V DC power supply and 5V DC power supply are negative values, the current consumption exceeds the capacity of the built-in power supply.
Reconfigure the system, adding input/output powered extension units or extension power supply units.

6.7 Expansion of Extension Power Supply Unit (FX3U-1PSU-5V)

If the selected devices in Section 6.5 are not connectable due to the built-in 5V DC power shortage, add an extension power supply unit.

1 Enter the current supply specification of the extension power supply unit.

The output current of the extension power supply unit is proportional to the ambient temperature as shown by the derating curve below. Enter the output current value, based on this derating curve.
Also verify that the number of occupied input/output points from input/output extension block(s) connected to the extension power supply unit is less than 32.

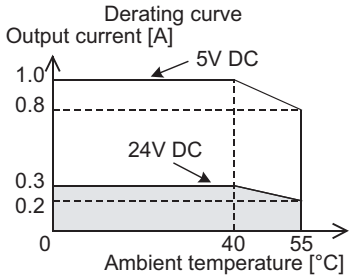

Power supply classification	Classification	Number of connected units	Type	Capacity of built-in power supply		Connectable I/O occupied points [points]
				5V DC power supply [mA]	Power supply for internal 24V DC [mA]	
3				3 -1	3 -2	3 -3
With built-in power supply	D1 Extension power supply unit	-	FX3U-1PSU-5V			32

2 Enter the specifications for the products to be added.

Enter the data on the input/output extension blocks and special function units/blocks to be connected to the input/output powered extension unit, and calculate the current.
→ **For the data on the number of input/output occupied points and current consumption of each type, refer to Section 6.8.**

Power supply classification	Classification	Number of connected units	Type	Capacity of built-in power supply		Number of I/O occupied points*1 {points}
				5V DC power supply [mA]	Power supply for internal 24V DC [mA]	
Enter the products connected to the extension power supply unit	B2 Input/output extension block*2	-	FX2N-	-		
			FX2N-	-		
			FX2N-	-		
			FX2N-	-		
	C Special function unit/block	8*3	FX2N/FX3U-			-
			FX2N/FX3U-			-
			FX2N/FX3U-			-
			FX2N/FX3U-			-
			FX2N/FX3U-			-
			FX2N/FX3U-			-
			FX2N/FX3U-			-
			FX2N/FX3U-			-

	4 -1	4 -2	4 -3
4 Calculate the totals			

*1. Input/output occupied points by special function blocks are excluded.

*2. For the input extension block (including the FX2N-8ER-ES/UL and FX2N-8ER), it is not necessary to calculate the current consumption of the internal 24V DC. Include the input extension block in calculation for the nearest main unit or input/output powered extension unit located on the upstream side to the extension power supply unit.

→ **When the main unit is on the upstream side, refer to Subsection 6.5.1 and Subsection 6.5.2.**
→ **When the input/output powered extension unit is on the upstream side, refer to Subsection 6.6.1 and Subsection 6.6.2.**

*3. A maximum of 8 special function units/blocks are connectable, including the main unit and the input/output powered extension unit.

3 Determine whether the devices can be added to the extension power supply unit.

Calculate the current to confirm whether the selected extension devices can be connected.

1. Calculate the current consumption of the built-in 5V DC power supply.

Capacity of 5V DC power supply		Current consumption		Calculation result		
Extension power supply unit		Total of current consumed by extension devices				
3 -1 mA	-	4 -1 mA	=	mA	≥	0mA

2. Calculate the available current supply from the internal 24V DC power supply.

Power supply capacity for internal 24V DC		Current consumption		Calculation result		
Extension power supply unit		Total of current consumed by extension devices				
3 -2 mA	-	4 -2 mA	=	mA	≥	0mA

3. Calculate the available input/output occupied points (excluding the occupied input/output by special function blocks).

Connectable I/O occupied points		Number of I/O occupied points		Calculation result		
Extension power supply unit		Total of I/O occupied points by extension devices				
3 -3 points	-	4 -3 points	=	points	≥	0points

If the calculation result for the 5V DC power supply is a negative value, the current consumption exceeds the power supply capacity.
If the calculation result for the internal 24V DC is a negative value, the current consumption exceeds the power supply capacity.
If the calculation result for the number of occupied input/output points is a negative value, the available number of input/output points is exceeded.
Reconfigure the system with an input/output powered extension unit.

6.8 Number of Input/Output (Occupied) Points and Current Consumption

The following tables show the number of input/output points or the number of input/output occupied points for each type of device, along with the power supply type and current consumption values needed for selecting a product.

- Number of input/output points or input/output occupied points on each type of device
- Output current of 24V DC service power supply of main units
- Output current of 5V DC power supply and 24V DC service power supply of input/output powered extension units
- Current consumed by input/output extension blocks and special function blocks

The current consumption is determined differently in the following cases.

- In the input/output powered extension unit, 5V DC and internal 24V DC are supplied via extension cables.It is necessary to calculate the current consumption.Subtract the current consumption of the internal 24V DC from the 24V DC service power supply.
- The special function units/blocks connected to the AC power type main unit or to the 24V DC service power supply terminal of the input/output powered extension unit consume the external 24V DC. Include the current in the calculation of current consumption.
  When the terminal is connected with an external power supply, the current is not included in the calculation of current consumption.

6.8.1 [A] Main units

A

No.	Type	Input/output		Output current (mA)
		Number of input/ output points [points]	Input/output [points]	24V DC service power supply
AC power supply/24V DC input/transistor output type				
A1	FX3G-14MT/ES	14(16)*1	8/6(8)	400
	FX3G-24MT/ES	24(32)*1	14(16)/10(16)	
	FX3G-40MT/ES	40	24/16	
	FX3G-60MT/ES	60(64)*1	36(40)/24	

*1. Each number inside ( ) indicates the number of occupied points.
Use numbers inside ( ) when calculating the total number of input/output points.

6.8.2 [B] Input/output powered extension units/blocks

1. Input/output powered extension units

B

No.	Type	Input/output		Output current (mA)	
		Number of input/ output points [points]	Input/output [points]	5V DC power supply	24V DC service power supply
B1	FX2N-32ER-ES/UL	32	16/16	690	250
	FX2N-32ET-ESS/UL	32	16/16		
	FX2N-32ER	32	16/16		
	FX2N-32ES	32	16/16		
	FX2N-32ET	32	16/16		
	FX2N-48ER-ES/UL	48	24/24		460
	FX2N-48ET-ESS/UL	48	24/24		
	FX2N-48ER	48	24/24		
	FX2N-48ET	48	24/24		

2. Input/output extension blocks

B

No.	Type	Number of input/ output points	Current consumed (mA)	
			5V DC	Internal 24V DC
	Types for addition of input/output			
	FX2N-8ER-ES/UL	16*1	-	62.5
	FX2N-8ER	16*1	-	62.5
	Types for addition of input			
	FX2N-8EX-ES/UL	8	-	50
	FX2N-8EX	8	-	50
	FX2N-8EX-UA1/UL	8	-	50
	FX2N-16EX-ES/UL	16	-	100
	FX2N-16EX	16	-	100
	FX2N-16EX-C	16	-	100
	FX2N-16EXL-C	16	-	100
B2	**Types for addition of output**			
	FX2N-8EYR-ES/UL	8	-	75
	FX2N-8EYT-ESS/UL	8	-	75
	FX2N-8EYR	8	-	75
	FX2N-8EYT	8	-	75
	FX2N-8EYT-H	8	-	75
	FX2N-16EYR-ES/UL	16	-	150
	FX2N-16EYT-ESS/UL	16	-	150
	FX2N-16EYR	16	-	150
	FX2N-16EYS	16	-	150
	FX2N-16EYT	16	-	150
	FX2N-16EYT-C	16	-	150

*1. Four inputs and four outputs are occupied as unused numbers.

6.8.3 [C] Special function devices

C

No.	Type	Number of input/ occupied output points	Current consumed (mA)		
			5V DC	Internal 24V DC	External 24V DC
C1	FX3U-4AD	8	110	0	90
	FX2N-2AD	8	20	50*3	0
	FX2N-4AD	8	30	0	55
	FX2N-8AD	8	50	0	80
	FX2N-4AD-PT	8	30	0	50
	FX2N-4AD-TC	8	30	0	50
	FX3U-4DA	8	120	0	160
	FX2N-2DA	8	30	85*3	0
	FX2N-4DA	8	30	0	200
	FX2N-5A	8	70	0	90
	FX2N-2LC	8	70	0	55
	FX3U-64CCL	8	0	0	220
	FX2N-16CCL-M	8*1	0	0	150
	FX2N-32CCL	8	130	0	50
	FX2N-64CL-M	8*2	190	Supplied from power supply for CC-Link/LT	

*1. The following number of points is added according to the products connected to the network.
Number of remote I/O stations × 32 points

*2. The following number of points is added according to the products connected to the network.
Total number of input/output points of remote I/O stations

*3. When analog special function blocks (FX2N-2AD and FX2N-2DA) are connected to an input/output powered extension unit (FX2N-32E□ or FX2N-48E□), the following limitation must be taken into consideration. (When the blocks are connected to the main unit, this limitation is not applied.)
The total current consumption of the analog special function blocks (FX2N-2AD and FX2N-2DA) should be less than the following current values.
- Total current consumption of blocks connected to FX2N-32E□: 190 mA or less
- Total current consumption of blocks connected to FX2N-48E□: 300 mA or less

6.8.4 [D] Extension Power Supply Unit

D

No.	Type	Number of input/ occupied output points	Current consumed (mA)*1	
			5V DC power supply	Internal 24V DC
D1	FX3U-1PSU-5V	-	1000	300

*1. The ambient temperature restricts the output current. For details, refer to the derating curve in Section 6.7.

7. Assignment of Input/Output Numbers and Unit Numbers

7.1 Assignment of Input/Output Numbers (X/Y)

If input/output powered extension units/blocks have been connected when the power is turned on, the main unit automatically assigns the input/output numbers (X/Y) (octal) to the units/blocks.
Therefore, it is unnecessary to specify the input/output numbers with parameters.
Accordingly, it is not necessary to specify input/output numbers using parameters.
It is necessary to assign input and output numbers in the following special function blocks.

- FX2N-64CL-M

7.1.1 Concept of assigning

When the power is turned on, input/output numbers (X/Y) are assigned in accordance with the following rules.
In the FX2N-64CL-M, input/output numbers are assigned to connected remote input/output stations.
For details on assignment, refer to the FX2N-64CL-M manual.

1. Input/output numbers (X/Y) are octal.

Octal numbers are assigned as input/output numbers (X/Y) as shown below.

- X000 to X007, X010 to X017, X020 to X027....., X070 to X077, X100 to X107...
- Y000 to Y007, Y010 to Y017, Y020 to Y027....., Y070 to Y077, Y100 to Y107...

2. Unused numbers

Note that unused numbers (which cause the difference between the number of occupied points and the number of effective points) are generated when the following products are used.

- Main units (FX3G-14M□, FX3G-24M□, FX3G-60M□)
- input/output extension blocks (FX2N-8ER-ES/UL, FX2N-8ER)

3. Numbers for added input/output unit/block

To an added input/output powered extension unit/block, input numbers and output numbers following the input numbers and output numbers given to the preceding device are assigned.
The last digit of the assigned numbers must begin with 0.
When the input/output powered extension unit is connected to the main unit, input/output numbers are assigned as follows.

- In the case of FX3G-14M□

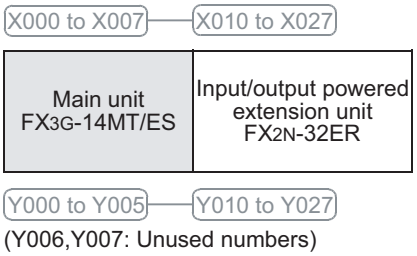

(Y006,Y007: Unused numbers)

- In the case of FX3G-24M□

(X016,X017: Unused numbers)

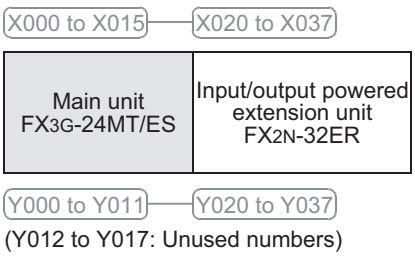

(Y012 to Y017: Unused numbers)

- In the case of FX3G-40M□

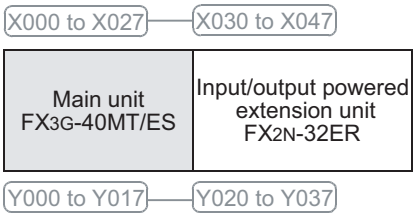

- In the case of FX3G-60M□

(X044 to X047: Unused numbers)

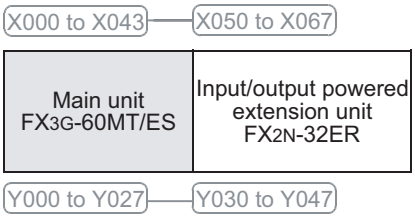

7.1.2 Example of assigning

An example of assignment of input/output numbers (X/Y) is shown below.

1. Example of configuration

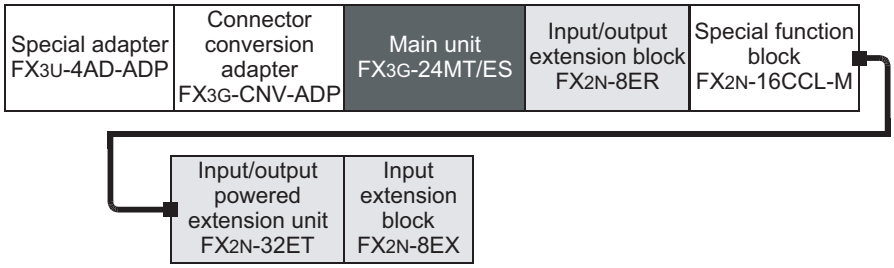

2. Assignment of input/output numbers

Input/output numbers are assigned to the above example configuration as shown below.

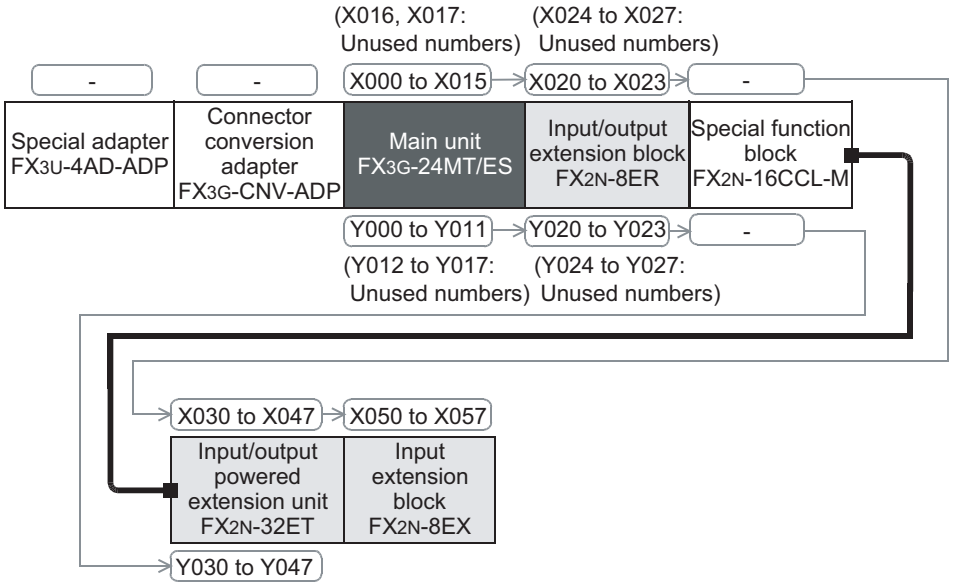

7.1.3 Application of I/O number label

The input/output powered extension units/blocks come with an I/O number label.
Apply the I/O number label to spaces on the enclosure (see the following figure) so that the input/output numbers can be identified.

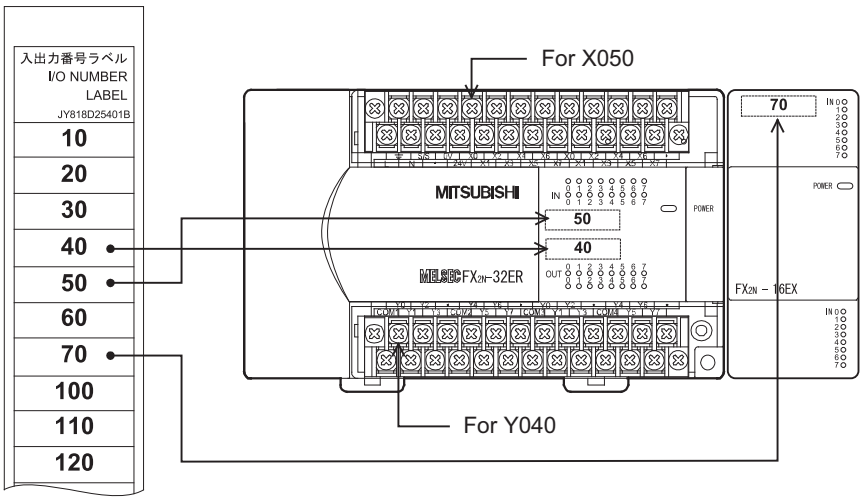

7.2 Unit Numbers of Special Function Blocks

7.2.1 Concept of assigning

When power is turned on, the main unit (CPU) automatically assigns the numbers 0 to 7 to special function blocks starting from the one closest to the main unit.
Unit numbers are not given to input/output powered extension units/blocks.

1. Special function blocks connected to main unit

The numbers 0 to 7 are assigned to the special function blocks starting from the one closest to the main unit.

2. Products to which unit numbers are not assigned

- Input/output powered extension units: FX2N-32ER, FX2N-48ET, etc.
- Input/output extension blocks: FX2N-16EX, FX2N-16EYR, etc.
- Connector conversion adapter: FX3G-CNV-ADP, FX2N-CNV-BC
- Expansion boards: FX3G-232-BD, etc.
- Special adapters: FX3U-232ADP(-MB), FX3U-4AD-ADP, etc.
- Extension power supply unit: FX3U-1PSU-5V

7.2.2 Example of assigning

Unit numbers are assigned to the special function blocks in the following configuration.

→ **For assignment of input/output numbers, refer to Section 7.1.**

1. Example of configuration

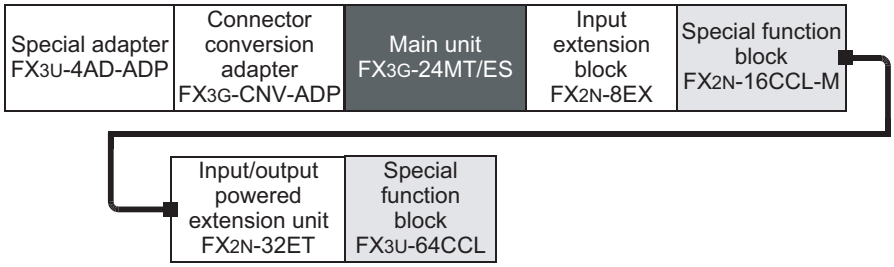

2. Assignment of Unit No.

Unit numbers are assigned to the special function blocks in the above configuration as shown below.

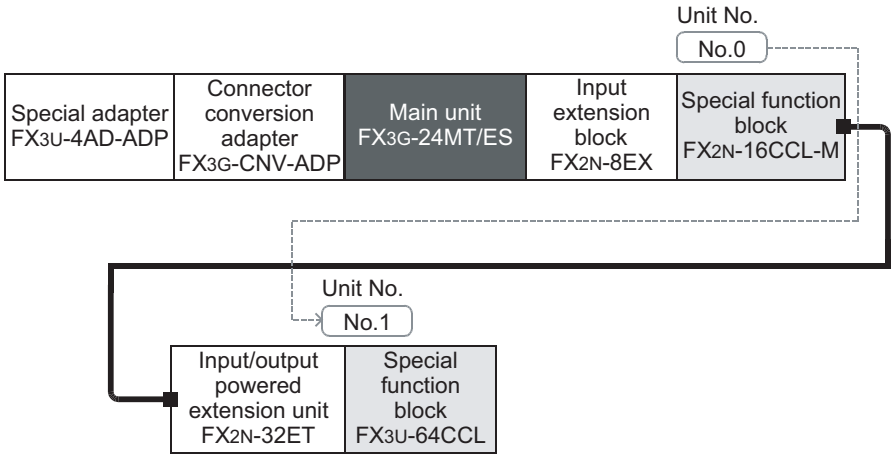

7.2.3 Application of unit number labels

The special function units/blocks come with unit number labels.
Apply the unit number labels to spaces on the enclosure (see the following figure) so that the unit numbers can be identified.

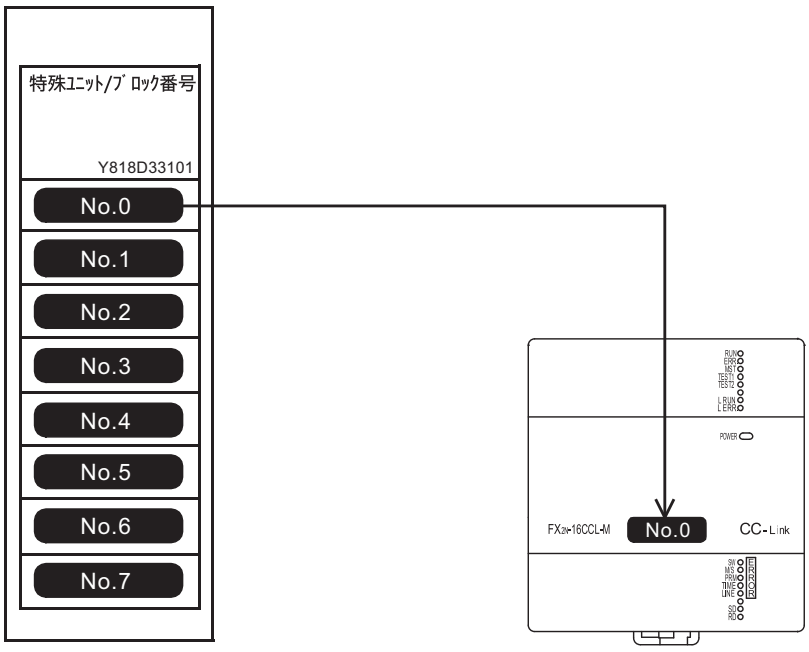

7.3 Assignment of Communication Channels

7.3.1 Assignment of communication channels

When the communication expansion board or special communication adapter is used, the main unit (CPU) automatically assigns communication channels at the time of power ON. The number of available communication channels varies depending on the main unit type.

- Main unit (40/60 point type) : Max 2ch
- Main unit (14/24 point type) : Max 1ch

1. In the case of main unit (40/60 point type)

"Ch1" is assigned to the communication expansion board connected to the BD1 connector or the first special communication adapter connected to the connector conversion adapter.
"Ch2" is assigned to the communication expansion board (FX3G-8AV-BD included) connected to the BD2 connector or the second special communication adapter connected to the connector conversion adapter.

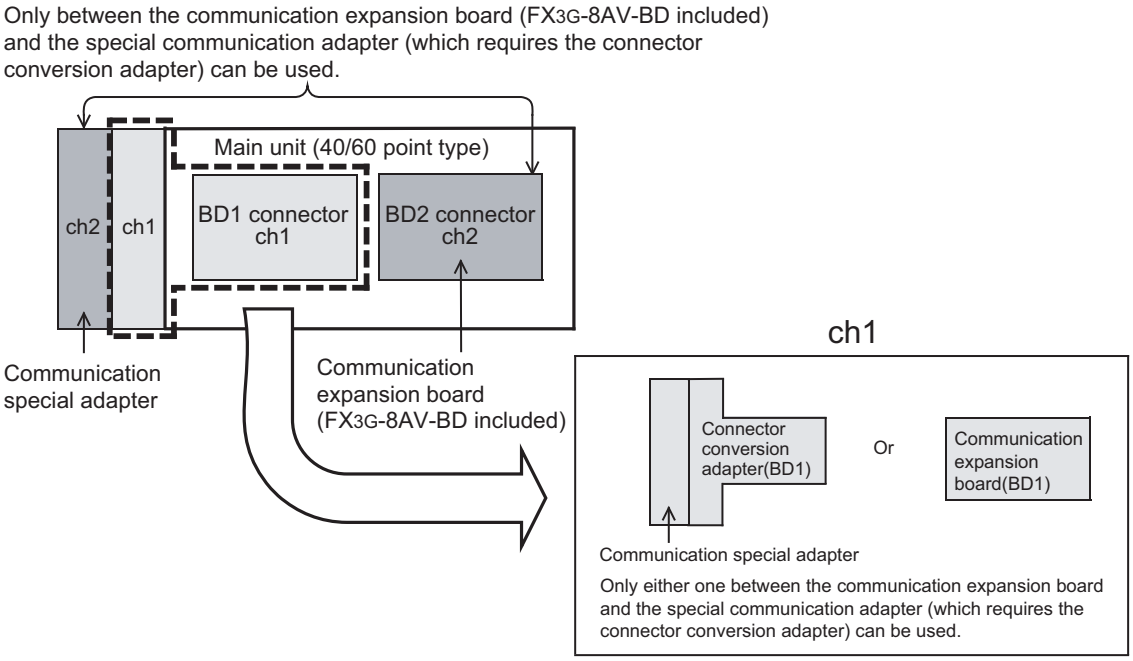

2. In the case of main unit (14/24 point type)

"Ch1" is assigned to the communication expansion board (FX3G-8AV-BD included) connected to the BD connector or the special communication adapter connected to the connector conversion adapter.

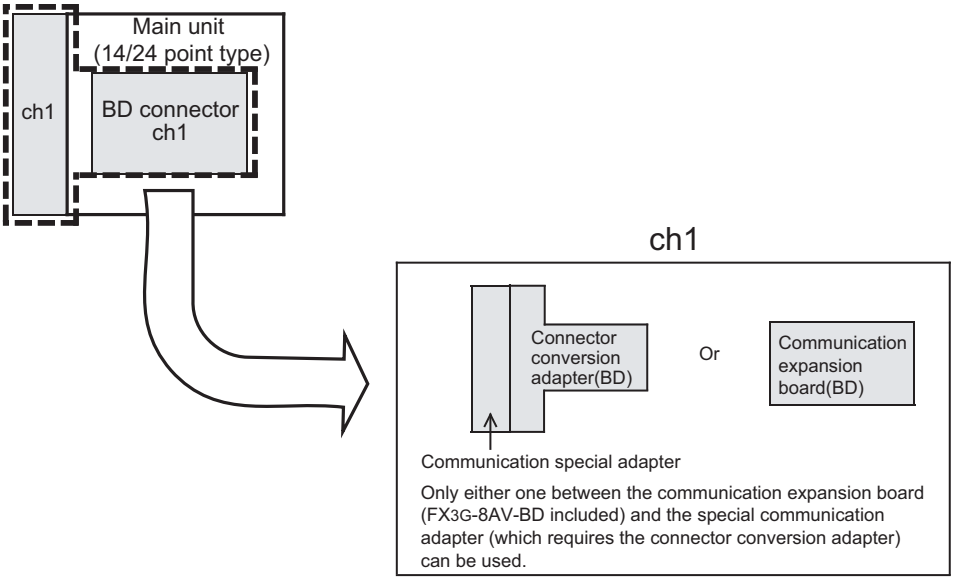

7.4 "Station No." Label of Expansion Board (FX3G-485-BD)

The "station No." label is packed together with the FX3G-485-BD. Place it in a position where it can be seen easily for simple reference (as shown in the figure below).

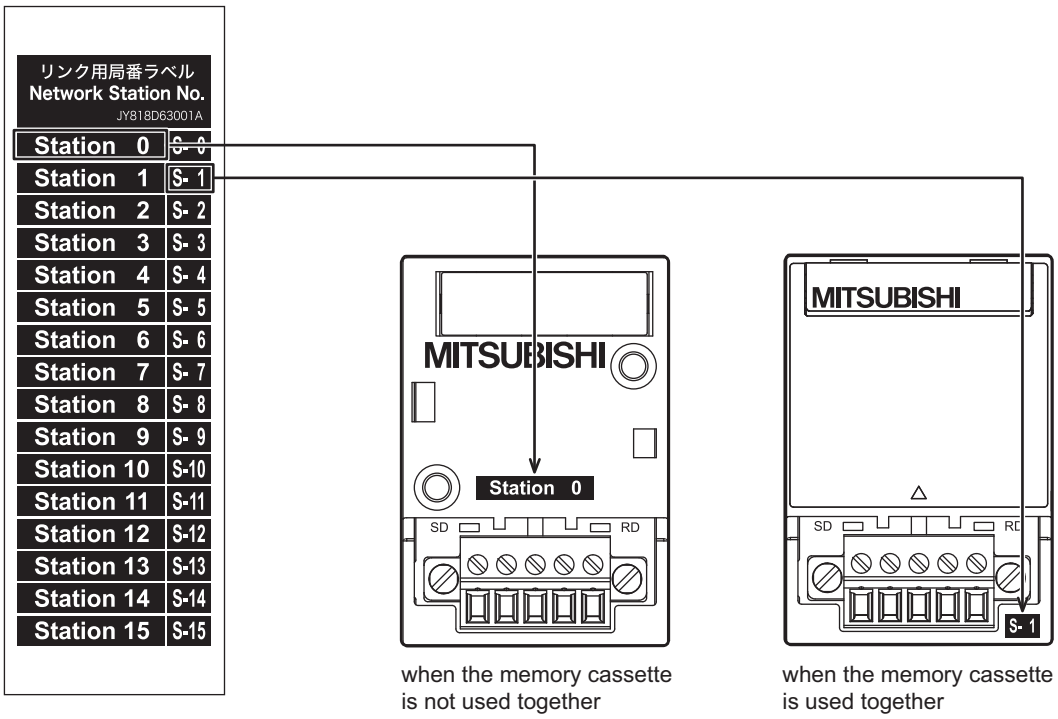

when the memory cassette is not used together

when the memory cassette is used together

7.5 Trimmer Layout Label of Expansion Board (FX3G-8AV-BD)

The trimmer layout label is packed together with the FX3G-8AV-BD.
Adhere it in a position where it can be seen easily for quick reference (as shown in the figure below).

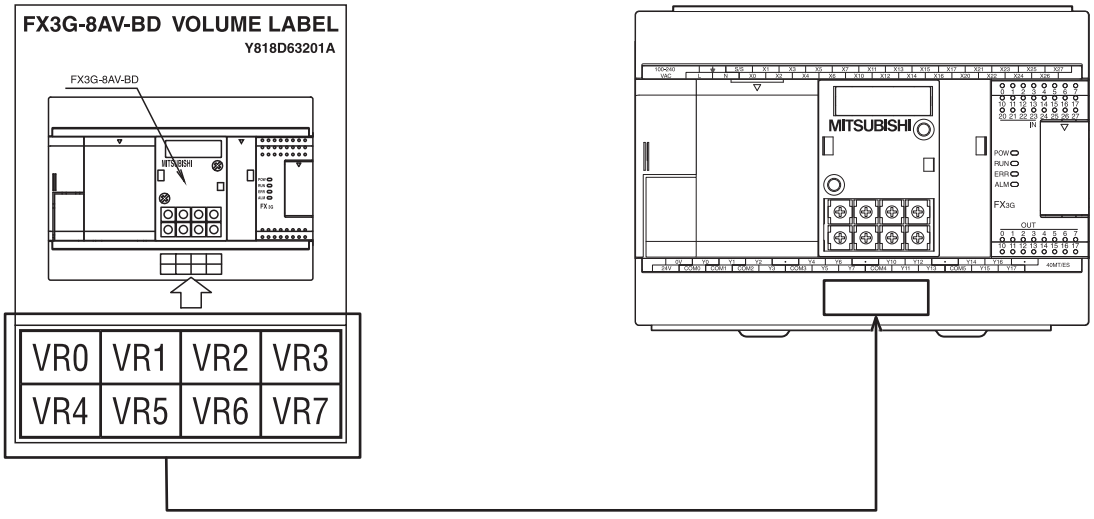

8. Installation In Enclosure

DESIGN PRECAUTIONS ⚠ DANGER

- Make sure to have the following safety circuits outside of the PLC to ensure safe system operation even during external power supply problems or PLC failure.
  Otherwise, malfunctions may cause serious accidents.
  1) Most importantly, have the following: an emergency stop circuit, a protection circuit, an interlock circuit for opposite movements (such as normal vs. reverse rotation), and an interlock circuit (to prevent damage to the equipment at the upper and lower positioning limits).
  2) Note that when the PLC CPU detects an error, such as a watchdog timer error, during self-diagnosis, all outputs are turned off.
  Also, when an error that cannot be detected by the PLC CPU occurs in an input/output control block, output control may be disabled.
  External circuits and mechanisms should be designed to ensure safe machinery operation in such a case.
  3) Note that the output current of the 24V DC service power supply varies depending on the model and the absence/presence of extension blocks. If an overload occurs, the voltage automatically drops, inputs in the PLC are disabled, and all outputs are turned off.
  External circuits and mechanisms should be designed to ensure safe machinery operation in such a case.
  4) Note that when an error occurs in a relay, triac or transistor output device, the output could be held either on or off.
  For output signals that may lead to serious accidents, external circuits and mechanisms should be designed to ensure safe machinery operation in such a case.

DESIGN PRECAUTIONS ⚠ CAUTION

- Do not bundle the control line together with or lay it close to the main circuit or power line. As a guideline, lay the control line at least 100mm (3.94") or more away from the main circuit or power line.
  Noise may cause malfunctions
- Install module so that excessive force will not be applied to peripheral device connectors.
  Failure to do so may result in wire damage/breakage or PLC failure.

INSTALLATION PRECAUTIONS ⚠ DANGER

- Make sure to cut off all phases of the power supply externally before attempting installation or wiring work.
  Failure to do so may cause electric shock.

INSTALLATION PRECAUTIONS ⚠CAUTION

- Use the product within the generic environment specifications described in Section 4.1 of this manual.
  Never use the product in areas with excessive dust, oily smoke, conductive dusts, corrosive gas (salt air, Cl_2, H_2S, SO_2 or NO_2), flammable gas, vibration or impacts, or expose it to high temperature, condensation, or rain and wind.
- Do not touch the conductive parts of the product directly.
  Doing so may cause device failures or malfunctions.
- Install the product securely using a DIN rail or mounting screws.

Terminal block	DIN rail only
Main unit, FX2N Series I/O extension unit/block, and FX2N/FX3U Series special extension block/special adapter	DIN rail or direct mounting

- Install the product on a flat surface.
  If the mounting surface is rough, undue force will be applied to the PC board, thereby causing nonconformities.
- Make sure to affix the expansion board with tapping screws.
  Tightening torque: 0.3 to 0.6 N•m
  Loose connections may cause malfunctions.
- When drilling screw holes or wiring, make sure that cutting and wiring debris do not enter the ventilation slits.
  Failure to do so may cause fire, equipment failures or malfunctions.
- Be sure to remove the dust proof sheet from the PLC's ventilation port when installation work is completed.
  Failure to do so may cause fire, equipment failures or malfunctions.
- Connect the extension cables, peripheral device cables, input/output cables and battery connecting cable securely to their designated connectors.
  Loose connections may cause malfunctions.
- Connect the memory cassette, and expansion board board securely to their designated connectors.
  Loose connections may cause malfunctions.
- Turn off the power to the PLC before attaching or detaching the following devices.
  Failure to do so may cause device failures or malfunctions.
  - Peripheral devices, expansion boards, and special adapters
  - Extension units/blocks and the FX Series terminal block
  - Battery and memory cassette

WIRING PRECAUTIONS ⚠DANGER

- Connect the AC power supply to the dedicated terminals specified in this manual.
  If an AC power supply is connected to a DC input/output terminal or DC power supply terminal, the PLC will burn out.
- Make sure to cut off all phases of the power supply externally before attempting installation or wiring work.
  Failure to do so may cause electric shock or damage to the product.
- Make sure to attach the terminal cover, offered as an accessory, before turning on the power or initiating operation after installation or wiring work.
  Failure to do so may cause electric shock.

WIRING PRECAUTIONS **⚠CAUTION**

- Do not supply power to the [24+] and [24V] terminals (24V DC service power supply) on the main unit or extension units.
  Doing so may cause damage to the product.
- Perform class D grounding (grounding resistance: 100Ω or less) to the grounding terminal on the main unit and extension units with a wire 2 mm^2 or thicker.
  Do not use common grounding with heavy electrical systems (refer to Section 9.3).
- Do not wire vacant terminals externally.
  Doing so may damage the product.
- Connect the DC power supply to the dedicated terminals specified in this manual.
  If an AC power supply is connected to a DC input/output terminal or DC power supply terminal, the PLC will burn out.
- When drilling screw holes or wiring, make sure cutting or wire debris does not enter the ventilation slits.
  Failure to do so may cause fire, equipment failures or malfunctions.
- Make sure to properly wire the FX2N/FX3U Series extension equipment in accordance with the following precautions.
  Failure to do so may cause electric shock, a short-circuit, wire breakage, or damage to the product.
  - The disposal size of the cable end should follow the dimensions described in this manual.
  - Tightening torque should be between 0.5 and 0.8 N•m.
- Make sure to properly wire to the European terminal board in accordance with the following precautions.
  Failure to do so may cause electric shock, a short-circuit, wire breakage, or damage to the product.
  - The disposal size of the cable end should follow the dimensions described in this manual.
  - Tightening torque should be between 0.22 and 0.25 N•m.
  - Twist the end of strand wire and make sure that there are no loose wires.
  - Do not solder-plate the electric wire ends.
  - Do not connect more than the specified number of wires or electric wires of unspecified size.
  - Affix the electric wires so that neither the terminal block nor the connected parts are directly stressed.
- Make sure to properly wire to the FX Series terminal blocks in accordance with the following precautions.
  Failure to do so may cause electric shock, a short-circuit, wire breakage, or damage to the product.
  - The disposal size of the cable end should follow the dimensions described in this manual.
  - Tightening torque should be between 0.5 and 0.8 N•m.

8.1 Installation location

Use the PLC under the environmental conditions complying with the generic specifications (Chapter 4).

Notes
• Keep a space of 50 mm (1.97") away between the unit main body and other devices and structure. Install the unit as far away as possible from high-voltage lines, high-voltage devices and power equipment. • To prevent temperature rise, do not install the PLC on a floor or a ceiling or in the vertical direction. Install it horizontally on a wall as shown below. • Arrange the extension cable in such a way that the left connectors of the input/output powered extension units/blocks or special function units/blocks are connected on the side closer to the main unit.

8.1.1 Installation location in enclosure

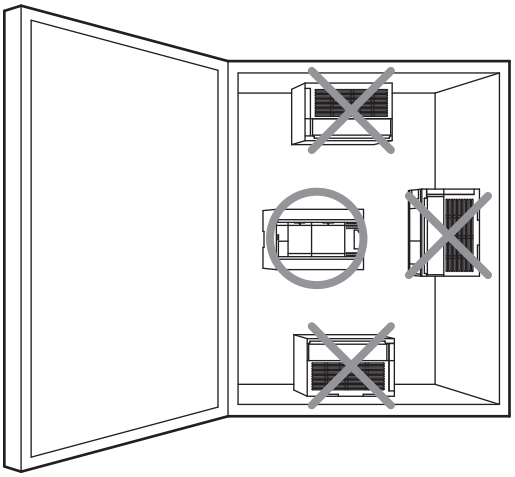

8.1.2 Spaces in enclosure

Extension devices can be connected on the left and right sides of the main unit of the PLC.
If you intend to add extension devices, keep necessary spaces on the left and right sides.

1. Configuration without extension cable

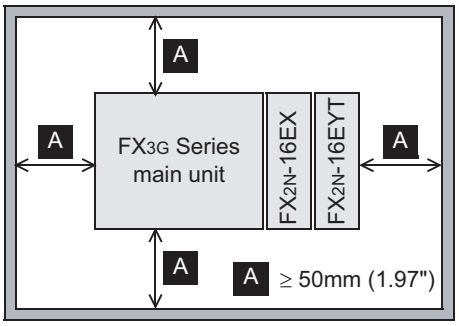

2. Configuration in 2 stages with extension cable

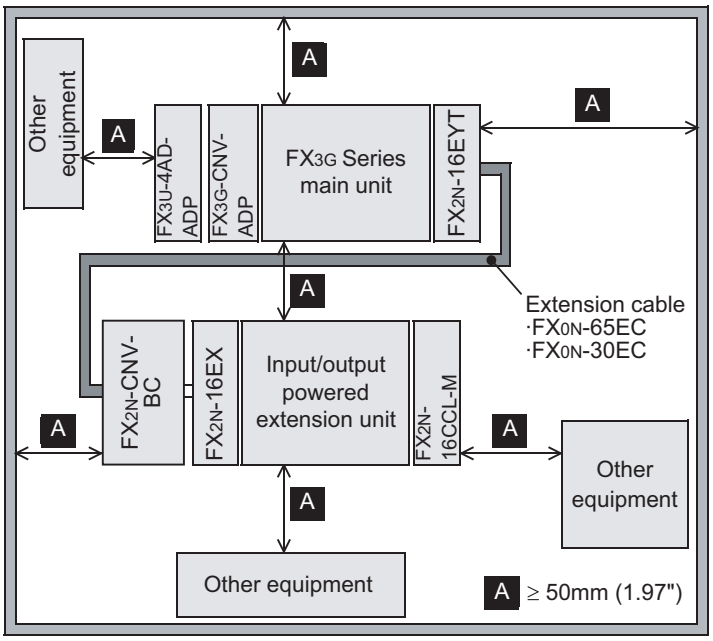

8.2 Layout in Enclosure

The PLC components can be laid out in one stage or in two stages, upper and lower. The connecting procedures in each case are explained below.

8.2.1 1-stage layout

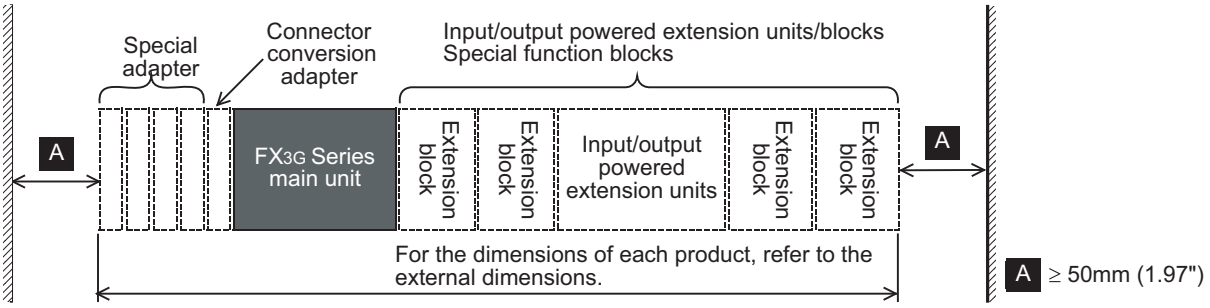

8.2.2 2-stage layout

In the case of a 2-stage layout, connect the first stage and the second stage with the extension cable. When an extension block is connected at the top of the second stage, FX2N-CNV-BC (connector conversion adapter) is necessary.

1. When an input/output powered extension unit is connected at the top of the 2nd stage

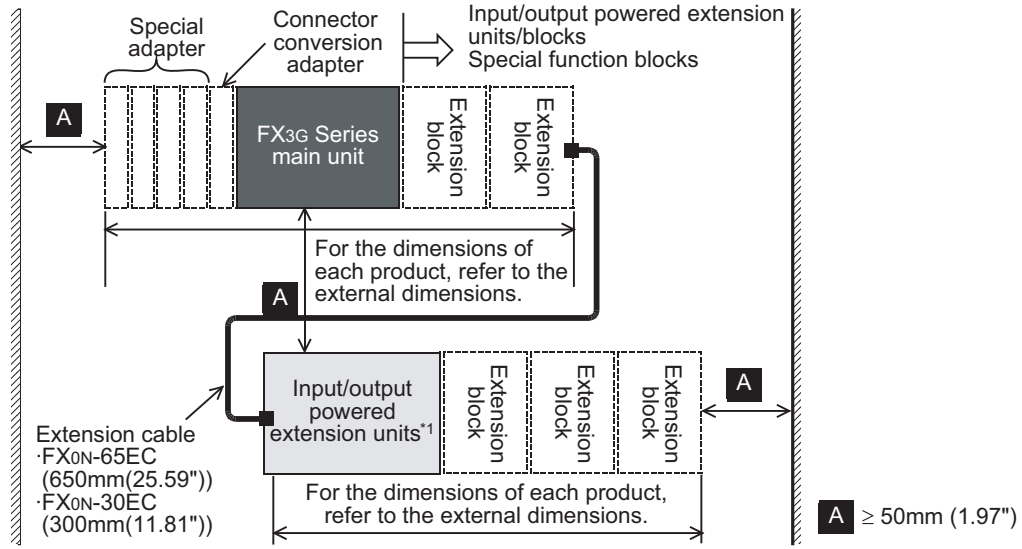

*1. Include FX3U-1PSU-5V

2. When an input/output extension block or a special function block is connected at the top of the 2nd stage

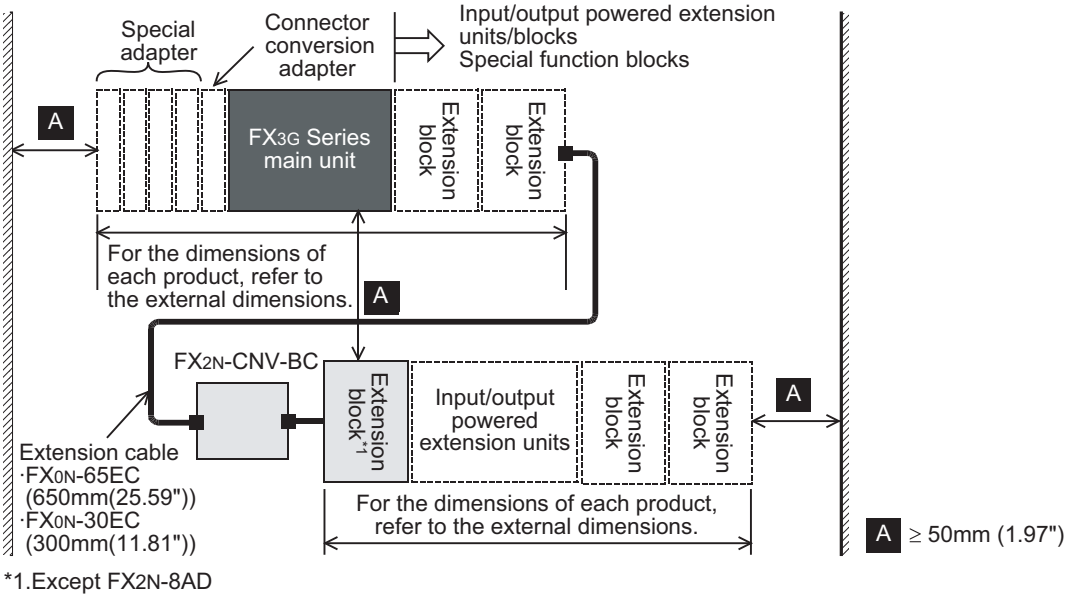

*1.Except FX2N-8AD

8.3 Examination for Installing Method in Enclosure

Examine the installation location of PLC in consideration of the environmental conditions (generic specifications).

8.3.1 Installing methods

The PLC can be installed by the following two methods.

1. Installing on DIN rail

- The PLC can be installed on a DIN46277 rail (35 mm (1.38") wide).
- The PLC can be easily moved and removed.
- The PLC is installed higher by the height of the DIN rail.

→ **For details on the procedures on mounting and removing the DIN rail, refer to Section 8.4.**

2. Direct installing (with screws)

- The PLC can be installed directly in the enclosure with M4 screws.

→ **For the mounting hole pitch, refer to Section 8.5.**

8.3.2 Cautions in examining installing method

→ **Refer to Section 8.2.**

1. Cautions when FX2N-8AD is used

When the system is laid out in two stages, do not mount FX2N-8AD at the top of the second stage, or FX2N-CNV-BC cannot be installed directly.

8.3.3 Examples of installation

1. Example of installation on DIN rail

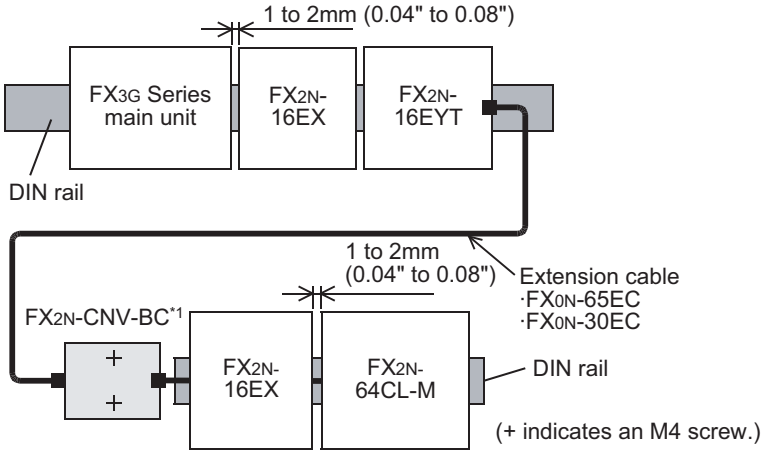

*1. FX2N-CNV-BC can be installed directly in the enclosure but cannot be installed on the DIN rail.

2. Example of direct installation

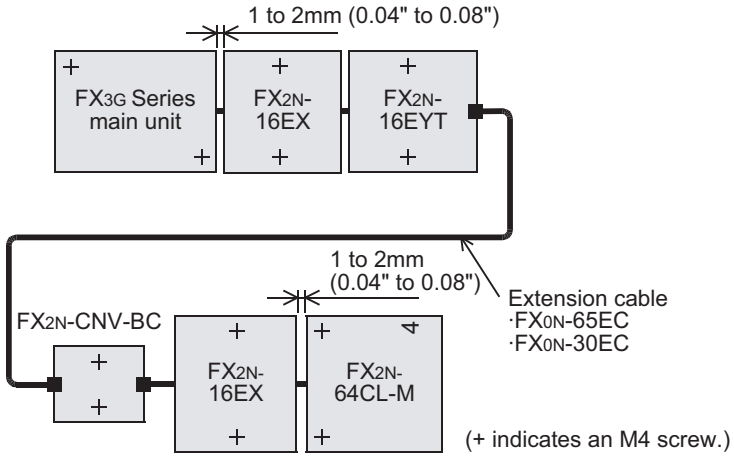

3. Example of combination of installation on DIN rail and direct installation

As shown in the following example, when the main unit is installed on the DIN rail, the extension devices connected with the extension cable can be installed directly in the enclosure.

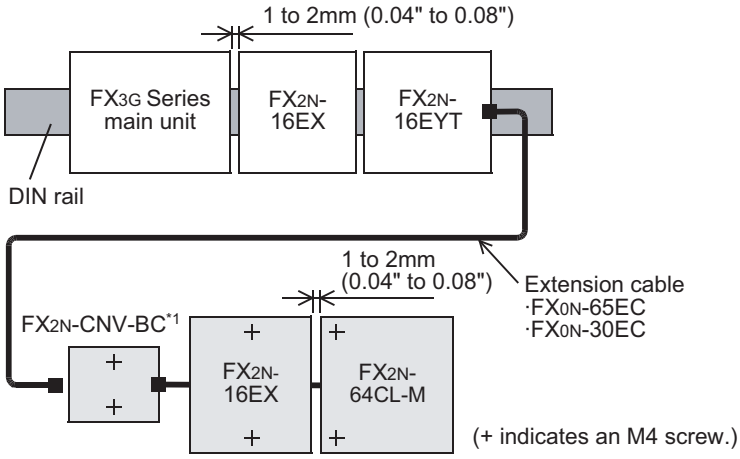

*1. FX2N-CNV-BC can be installed directly in the enclosure but cannot be installed on the DIN rail.

8.4 Procedures for Installing on and Detaching from DIN Rail

The main unit can be installed on a DIN46277 rail (35 mm (1.38") wide).

8.4.1 Preparation for installation

1. Connecting extension devices

Some extension devices must be mounted on the main unit before the unit is installed in the enclosure.

- Mount the special adapter or connector conversion adapter (FX3G-CNV-ADP) on the main unit before installing the main unit to the enclosure.
- Mount the input/output powered extension units/blocks and the special function blocks in the enclosure after installing the main unit in the enclosure.
- The expansion boards/memory cassette and the display module can be fitted to the main unit after it is installed.
- The battery can be replaced while the main unit is installed in the enclosure.
  However, when the expansion board, display module, memory cassette or connector conversion adapter is attached, remove the respective device.

→ **For the replacement method, refer to Chapter 22.**

2. Affixing The Dust Proof Sheet

The dust proof sheet should be affixed to the ventilation port before beginning the installation and wiring work.

→ **For the affixing procedure, refer to the instructions on the dust proof sheet.**

Be sure to remove the dust proof sheet when the installation and wiring work is completed.

8.4.2 Installation of main unit

The main unit must be installed before installing a special adapter or connector conversion adapter on the enclosure.

→ **For the connection procedure, refer to Subsection 8.6.3 and Subsection 8.6.4.**

1 **Push out all DIN rail mounting hooks (A in the right figure).**

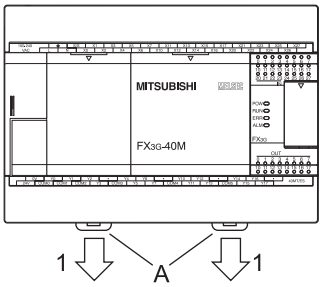

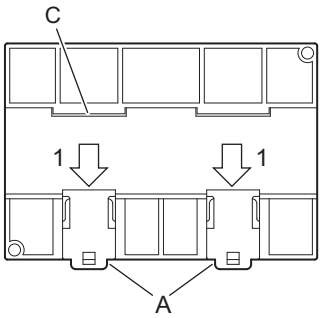

2 **Fit the upper edge of the DIN rail mounting groove (C in the right figure) onto the DIN rail.**

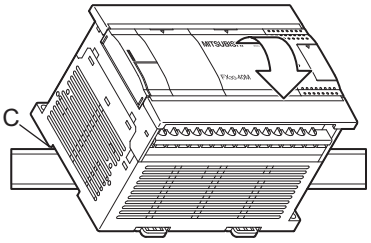

3 **Lock the DIN rail mounting hooks (D in the following figure) while pressing the PLC against the DIN rail.**

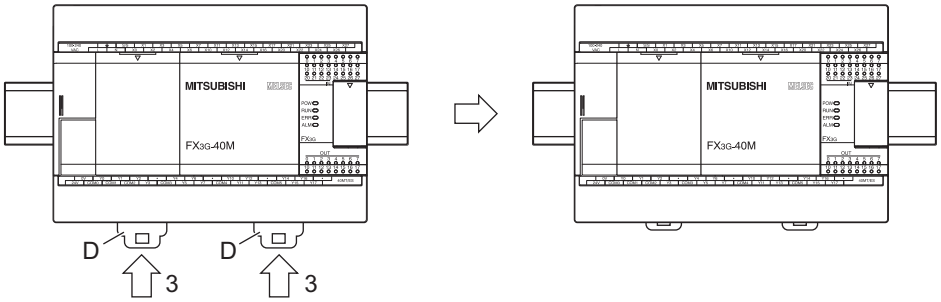

8.4.3 Installation of input/output powered extension unit/block and special function block

1 **Push out the DIN rail mounting hook (A in the right figure) of the input/output extension block.**

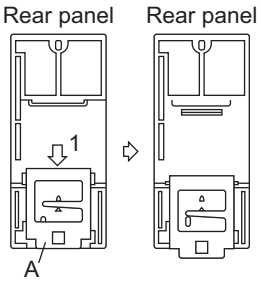

- For input/output powered extension units, 8-point type input/output extension blocks and special extension units/blocks, this operation is unnecessary.

2 **Fit the upper edge of the DIN rail mounting groove (B in the right figure) onto the DIN rail.**

3 **Push the product against the DIN rail.**

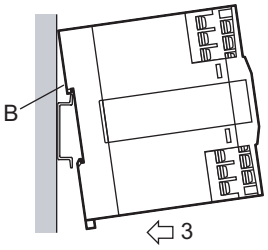

- Keep a gap of 1 to 2 mm (0.04" to 0.08") between the products.

4 **Connect the extension cable.**

→ **For the procedures on connecting the extension cable, refer to Subsection 8.6.5.**

8.4.4 Removal of main unit

1 **Open the terminal block cover, and remove the lower terminal block cover (A in the right figure).**

2 **Gradually loosen the left and right terminal block mounting screws (B in the right figure), and remove the terminal blocks.**
→ For anchoring of the terminal block, refer to Subsection 9.1.2.

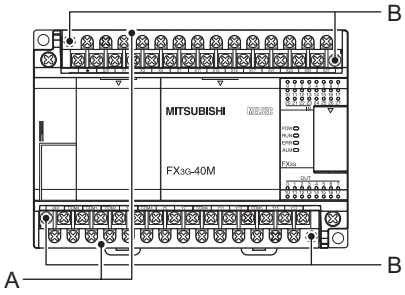

3 **Disconnect the extension cables and the connecting cables (including expansion board and special adapters).**

4 **Insert the tip of a flathead screwdriver into the hole of the DIN rail mounting hook (C in the right figure).**

- This step also applies for the DIN rail mounting hooks of the special adapters.

5 **Move the flathead screwdriver as shown in the right figure to draw out the DIN rail mounting hooks of all devices.**

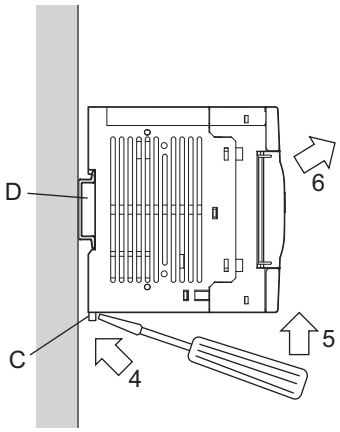

6 **Remove the product from the DIN rail (D in the right figure).**

7 **Push in the DIN rail mounting hooks (E in the right figure).**

- For input/output powered extension units, 8-point type input/output extension blocks and special function blocks, this operation is unnecessary.

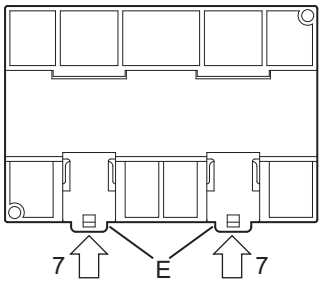

8.5 Procedures for Installing Directly (with M4 Screws)

The product can be installed directly in the enclosure (with screws).

Point

Position the holes so that there is a gap of 1 to 2 mm (0.04" to 0.08") between the products.

8.5.1 Hole pitches for direct mounting

The product mounting hole pitches are shown below.
For the pitch that varies depending on the product, refer to the table.

1. Main unit (A)

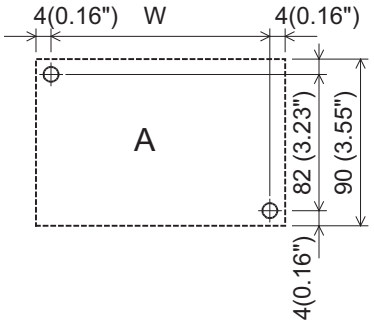

Unit: mm (inches)

	Model name	Mounting hole pitch(W)
A	FX3G-14MT/ES	82 (3.23")
	FX3G-24MT/ES	82 (3.23")
	FX3G-40MT/ES	122 (4.81")
	FX3G-60MT/ES	167 (6.58")

2. Special adapter (B)

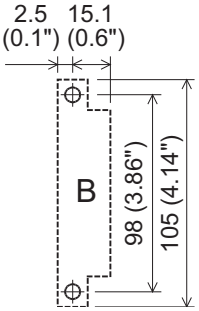

Unit: mm (inches)

	Model name	Mounting hole pitch(W)
B	FX3U-4AD-ADP FX3U-4DA-ADP FX3U-4AD-PT-ADP FX3U-4AD-PTW-ADP FX3U-4AD-PNK-ADP FX3U-4AD-TC-ADP FX3U-232ADP(-MB) FX3U-485ADP(-MB)	Refer to the figure shown left.

3. Input/output powered extension unit(C or D)

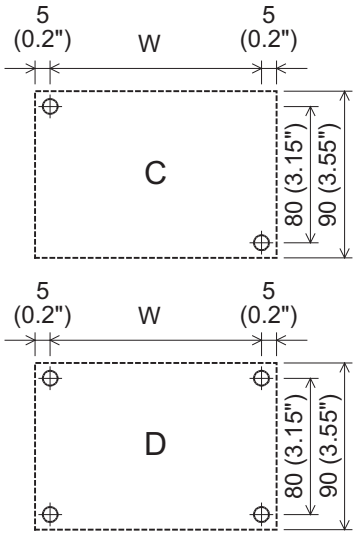

Unit: mm (inches)

	Model name	Mounting hole pitch(W)
C	FX2N-32ER-ES/UL FX2N-32ET-ESS/UL FX2N-32ER FX2N-32ET FX2N-32ES	140 (5.52")
D	FX2N-48ER-ES/UL FX2N-48ET-ESS/UL FX2N-48ER FX2N-48ET	172 (6.78")
	FX2N-48ER-UA1/UL	210 (8.27")

4. Input/output extension block (E or F)

Unit: mm (inches)

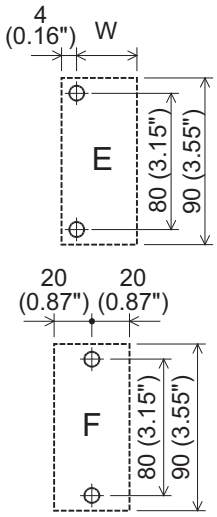

	Model name	Mounting hole pitch(W)
E	FX2N-8ER-ES/UL FX2N-8ER FX2N-8EX-ES/UL FX2N-8EX FX2N-8EX-UA1/UL FX2N-8EYR-ES/UL FX2N-8EYT-ESS/UL FX2N-8EYR FX2N-8EYT FX2N-8EYT-H	39 (1.54")
F	FX2N-16EX-ES/UL FX2N-16EX FX2N-16EX-C FX2N-16EXL-C FX2N-16EYR-ES/UL FX2N-16EYR FX2N-16EYT-ESS/UL FX2N-16EYT FX2N-16EYT-C FX2N-16EYS	Refer to the figure shown left.

5. Special function unit/block (G, H or I)

Unit: mm (inches)

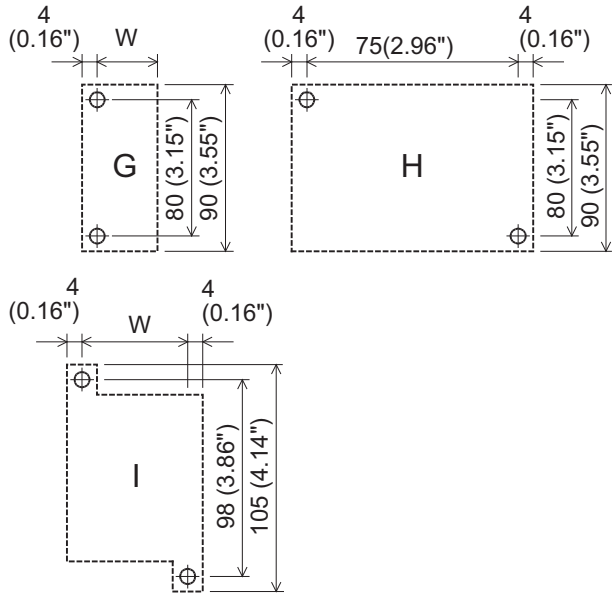

	Model name	Mounting hole pitch(W)
G	FX2N-2AD FX2N-2DA FX2N-64CL-M FX2N-32CCL	39 (1.54")
	FX3U-4AD FX3U-4DA FX2N-4AD FX2N-4DA FX2N-4AD-PT FX2N-4AD-TC FX2N-5A FX2N-2LC FX3U-64CCL FX3U-1PSU-5V	51 (2.01")
H	FX2N-16CCL-M	Refer to the figure shown left.
I	FX2N-20PSU	52 (2.05")
	FX2N-8AD	67 (2.64")

8.5.2 Example of mounting hole pitches

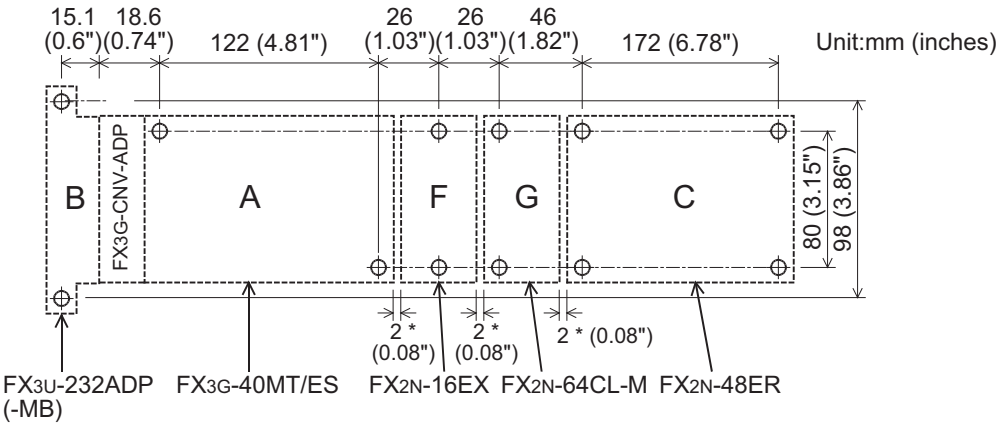

* The gap between products is 2 mm (0.08").

8.5.3 Installation of main unit

Mount the special adapters and connector conversion adapter (FX3G-CNV-ADP) on the main unit before installing the unit in the enclosure.

→ **For the connection procedure, refer to Subsection 8.6.3, Subsection 8.6.4.**

1 **Make mounting holes in the mounting surface according to the external dimensions diagram.**

2 **Fit the main unit (A in the right figure) based on the holes, and secure it with M4 screws (B in the right figure).**

The positions and number of screws depend on the product. Refer to the external dimensions diagram.

→ **For the external dimensions, refer to Section 4.6.**

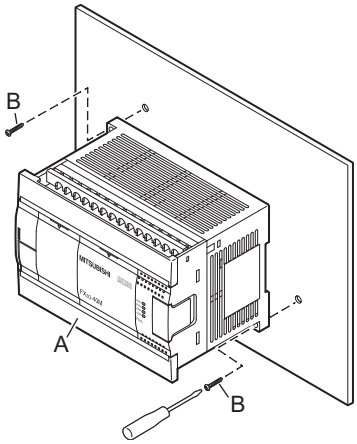

8.5.4 Installation of input/output powered extension unit/block and special function block

1 **Make mounting holes in the mounting surface according to the external dimensions diagram.**

2 **Push in the DIN rail mounting hook (A in the right figure) of the input/output extension block.**

If the DIN rail mounting hook is not pushed in, the screw hole is covered, and the block cannot be mounted.

For input/output powered extension units, 8-point type input/output extension blocks and special function blocks, this operation is unnecessary.

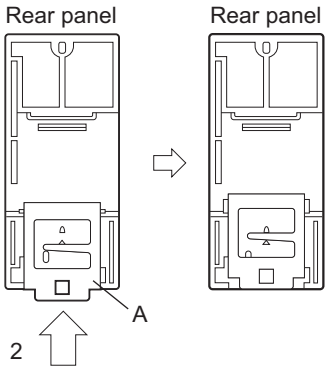

3 **Fit the input/output extension block (B in the right figure) based on the holes, and secure it with M4 screws (C in the right figure).**

The positions and number of screws depend on the product. Refer to the external dimensions diagram.

→ **For the external dimensions of the input/output powered extension unit, refer to Chapter 15.**
→ **For the external dimensions of the input/output extension block, refer to Chapter 16.**
→ **For the external dimensions of the special function blocks, refer to Chapter 18.**

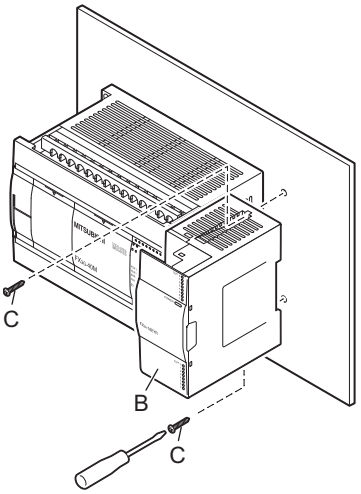

8.6 Connecting Methods for Main Unit and Extension Devices

This section explains the connecting methods for extension devices.

8.6.1 Connection of extension devices

The connecting method varies depending on the combination of the products, i.e. the main unit, expansion board, special adapters, input/output extension blocks and special function blocks.
The connecting methods are explained with the following configuration examples.

Example of configuration

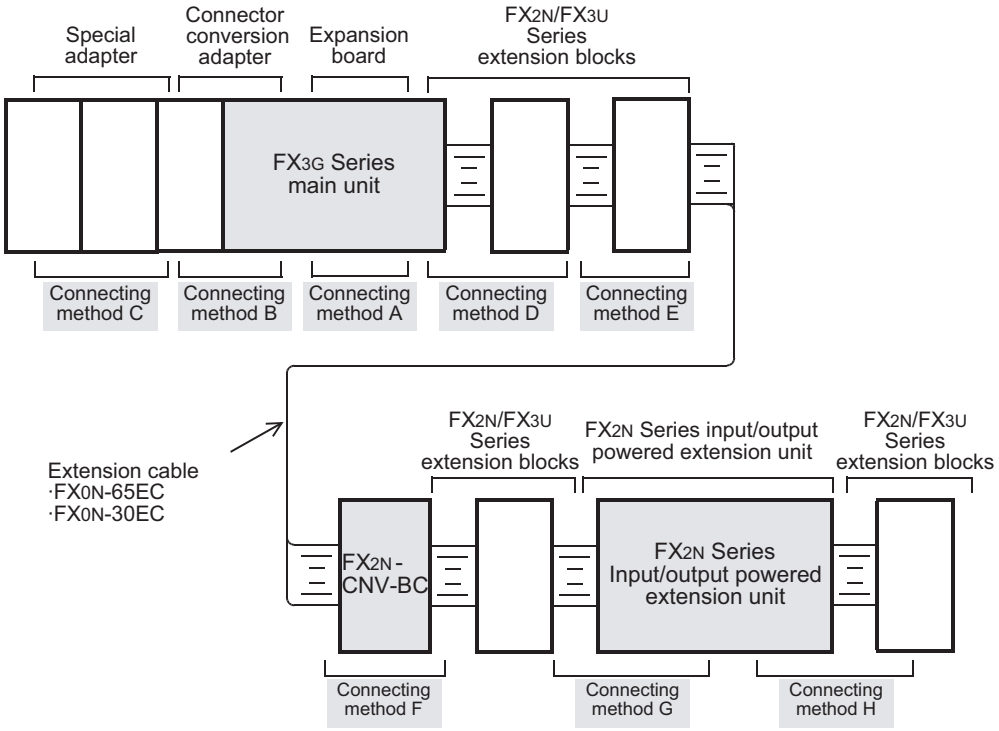

8.6.2 Connecting method A - connection of expansion board

This subsection explains how to connect the expansion board to the main unit.
The FX3G-40MT/ES is used as the main unit in this example.

1 **Remove the top cover (A in the right figure) from the front face of the main unit.**

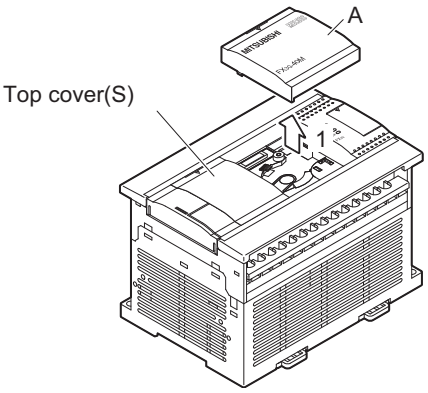

2 **Attach the provided side cover (B in the right figure) as shown in the right figure.**

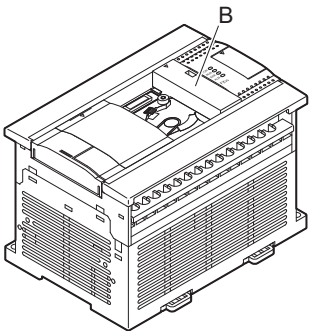

Caution

- Attachment of the side cover is not necessary when connecting the expansion board only under the top cover (S) of a 40/60-point type main unit.
- FX3G-8AV-BD cannot attach in the top cover(S) side of a main unit.

3 **Connect the expansion board to the option connector (C in the right figure).**

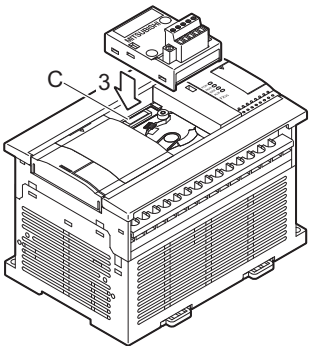

4 **Fix the expansion board (E in the right figure) with provided M3 tapping screws (D in the right figure) to the main unit.**

- Tightening torque : 0.3 to 0.6 N•m

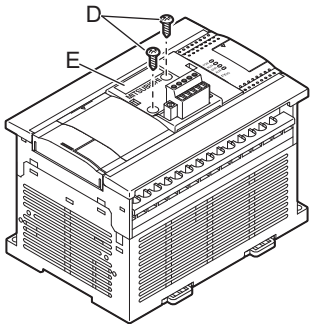

8.6.3 Connecting method A - connection of connector conversion adapter

1. This paragraph explains how to connect the connector conversion adapter to the main unit.
The FX3G-24MT/ES is used as the main unit in this example.

1 **Remove the top cover (A in the right figure) and peripheral device connector cover (B in the right figure) from the front face of the main unit.**

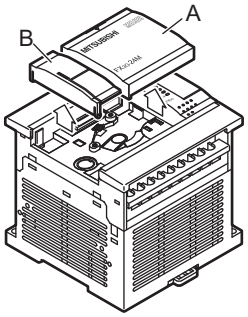

2 **Attach the provided side cover (C in the right figure) as shown in the right figure.**

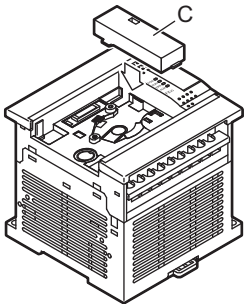

3 **Connect the connector conversion adapter to the option connector (D in the right figure) as shown in the right figure, and fix it with provided M3 tapping screws (E in the right figure).**

- Tightening torque : 0.3 to 0.6 N•m

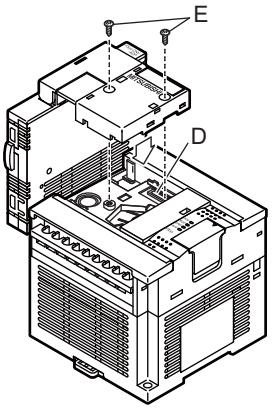

4 **Fix the connector conversion adapter (F in the right figure) with provided M3 tapping screws (E in the right figure) to the main unit.**

- Tightening torque : 0.3 to 0.6 N•m

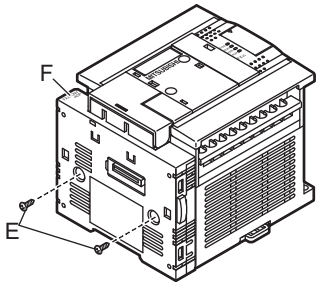

2. This paragraph explains how to connect the connector conversion adapter to the main unit.
The FX3G-40MT/ES is used as the main unit in this example.

1 **Remove the top cover (A in the right figure) and peripheral device connector cover (B in the right figure) from the front face of the main unit.**

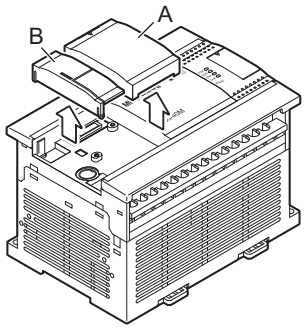

2 **Connect the connector conversion adapter to the option connector (C in the right figure) as shown in the right figure, and fix it with provided M3 tapping screws (D in the right figure).**

- Tightening torque : 0.3 to 0.6 N•m

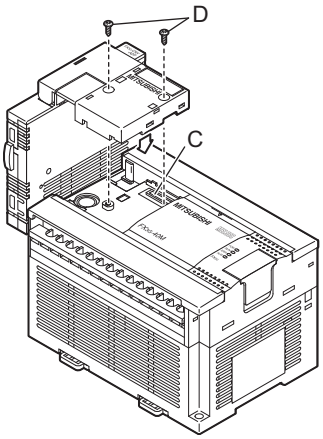

3 **Fix the connector conversion adapter (E in the right figure) with provided M3 tapping screws (D in the right figure) to the main unit.**

- Tightening torque : 0.3 to 0.6 N•m

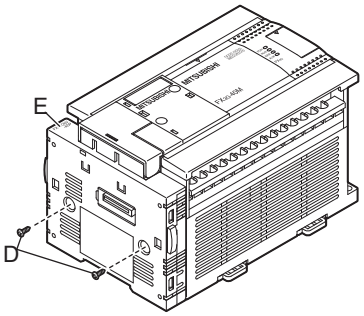

8.6.4 Connecting method C - connection of special adapter

When connecting the special adapter, it is necessary to attach the connector conversion adapter before the special adapter using the method described in the preceding subsection.

1 **Slide the special adapter connecting hooks (A in the right figure) of the main unit.**

- When adding a special adapter to the special adapter that has been connected to the connector conversion adapter, read "connector conversion adapter" as "special adapter." (This applies to the following steps.)

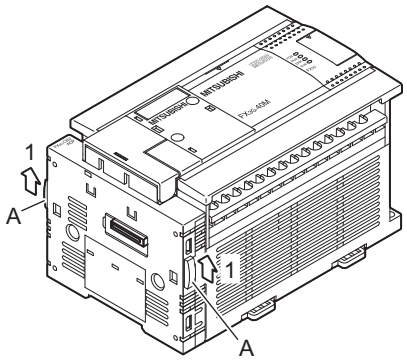

2 **Connect the special adapter (B in the right figure) to the connector conversion adapter as shown in the right figure.**

3 **Slide the special adapter connecting hooks (A in the right figure) of the connector conversion adapter to secure the special adapter (B in the right figure).**

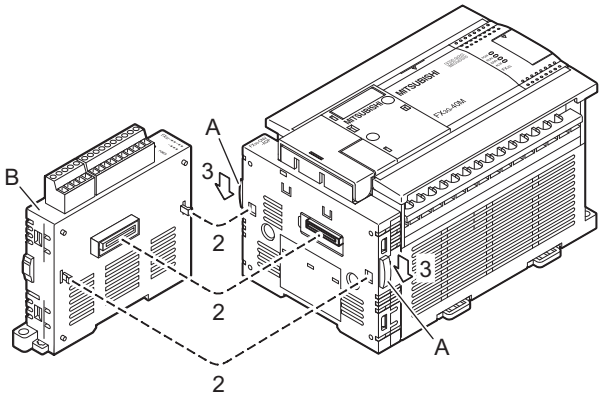

8.6.5 Connecting method D - connection of powered extension units/blocks to main unit

The procedures for connecting an powered extension unit/block to the main unit are explained below.

1 **Remove the extension device connector cover (A in the right figure) on the right side of the main unit.**

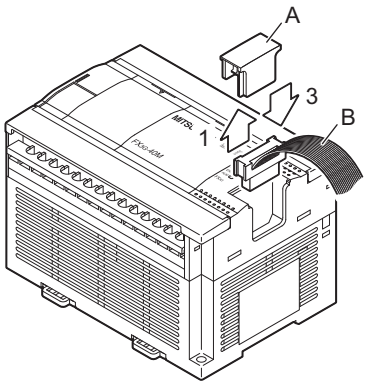

2 **Connect the extension cable (B in the right figure) from the extension block to be connected (right side) to the extension device connector of the main unit.**

- When connecting FX2N Series input/output powered extension unit or FX3U-1PSU-5V, connect the unit to be added (right side) and the existing unit (main unit) with the supplied extension cable.

3 **Fit the extension device connector cover (A in the right figure).**

8.6.6 Connecting method E - connection of powered extension units/blocks

This subsection explains the procedures for connecting FX2N Series input/output powered extension units/blocks or FX2N/FX3U Series special function blocks.

1 **Remove the top cover (B in the right figure) of the existing unit/block (left side) (A in the right figure).**

- When connecting FX3U-1PSU-5V, remove the top cover of FX3U-1PSU-5V.

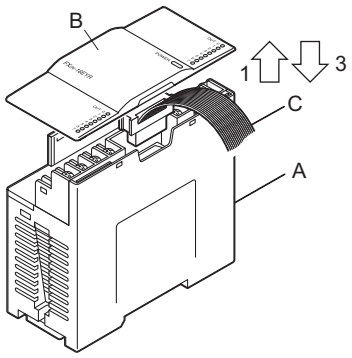

2 **Connect the extension cable (C in the above figure) of the block to be connected (right side) to the existing unit/block (A in the above figure).**

- When FX2N Series input/output powered extension units or FX3U-1PSU-5V units are connected, connect the unit to be added (right side) and the existing unit (left side) with the supplied extension cable.

3 **Fit the top cover (B in the above figure)**

8.6.7 Connecting method F - connection of extension cable and FX2N-CNV-BC

This subsection explains the procedures for connecting an extension cable and FX2N-CNV-BC to the extension cable of the powered extension unit/block.

1 **Separate the case of FX2N-CNV-BC into two pairs as shown right.**

To separate the case, use a precision flathead screwdriver.
Slightly insert the tip of the screwdriver into the part A shown in the right figure, and the hook (B in the right figure) will come off (4 places).

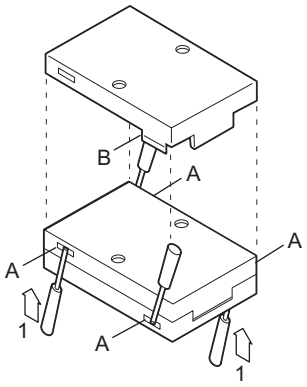

2 **Connect the extension cable on the upstream side (C in the right figure).**

3 **Connect the extension cable on the downstream side (D in the right figure).**

4 **Fit the upper cover (E in the right figure) and the lower cover (F in the right figure), and press down the upper cover until it is hooked.**

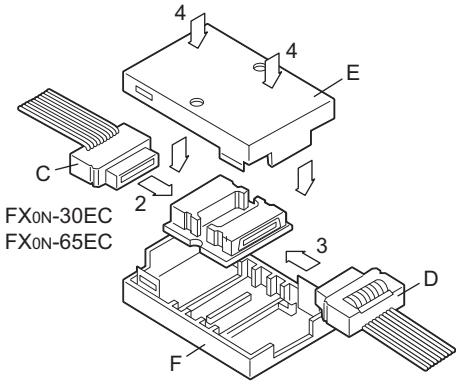

8.6.8 Connecting method G - connection of input/output powered extension unit

This subsection explains the procedures for connecting an input/output powered extension unit.

1 **Remove the top cover (A in the right figure) on the left side of the input/output powered extension unit.**

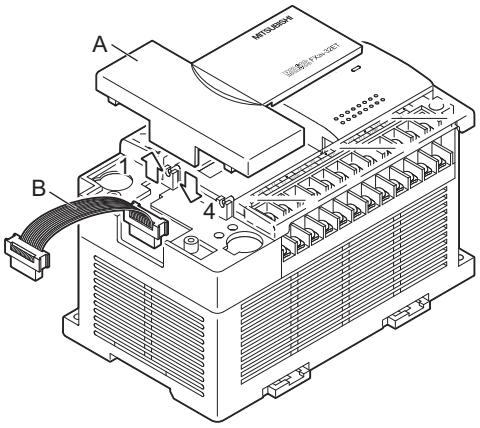

2 **Connect the connector of the provided extension cable (B in the right figure) to the extension connector of the unit/block on the upstream side (left side).**

3 **Connect the connector of the extension cable (supplied) (B in the right figure) to the extension connector of the input/output powered extension unit to be added.**

4 **Fit the top cover (A in the right figure).**

8.6.9 Connecting method H - connection of extension block to input/output powered extension unit

This subsection explains the procedures for connecting an extension block to an input/output powered extension unit.

1 **Remove the extension connector cover (A in the right figure) on the right side of the input/output powered extension unit.**

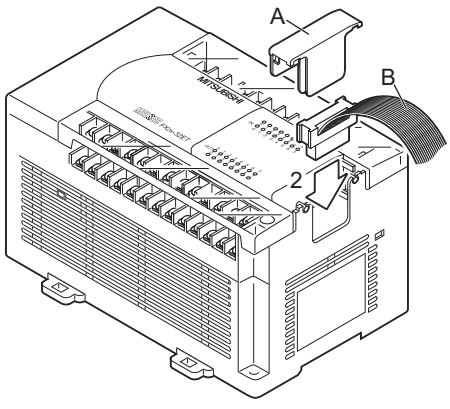

2 **Connect the extension cable (B in the right figure) from the extension block to be added (right side) to the extension connector of the input/output powered extension unit.**

- When connecting FX3U-1PSU-5V, read "input/output powered extension unit" as the unit.
- When connecting FX2N Series input/output powered extension unit FX3U-1PSU-5V, connect the unit to be added (right side) and the existing unit (main unit) with the supplied extension cable or the optional extension cable.

3 **Fit the extension connector cover (A in the right figure).**

9. Preparation for Wiring and Power Supply Wiring Procedures

DESIGN PRECAUTIONS ⚠ **DANGER**

- Make sure to have the following safety circuits outside of the PLC to ensure safe system operation even during external power supply problems or PLC failure.
  Otherwise, malfunctions may cause serious accidents.
  1) Most importantly, have the following: an emergency stop circuit, a protection circuit, an interlock circuit for opposite movements (such as normal vs. reverse rotation), and an interlock circuit (to prevent damage to the equipment at the upper and lower positioning limits).
  2) Note that when the PLC CPU detects an error, such as a watchdog timer error, during self-diagnosis, all outputs are turned off. Also, when an error that cannot be detected by the PLC CPU occurs in an input/output control block, output control may be disabled.
  External circuits and mechanisms should be designed to ensure safe machinery operation in such a case.
  3) Note that when the PLC CPU detects an error, such as a watchdog timer error, during self-diagnosis, all outputs are turned off. Also, when an error that cannot be detected by the PLC CPU occurs in an input/output control block, output control may be disabled.
  External circuits and mechanisms should be designed to ensure safe machinery operation in such a case.
  4) Note that when an error occurs in a relay, triac or transistor output device, the output could be held either on or off.
  For output signals that may lead to serious accidents, external circuits and mechanisms should be designed to ensure safe machinery operation in such a case.

DESIGN PRECAUTIONS ⚠ **CAUTION**

- Do not bundle the control line together with or lay it close to the main circuit or power line. As a guideline, lay the control line at least 100mm (3.94") or more away from the main circuit or power line.
  Noise may cause malfunctions.
- Install module so that excessive force will not be applied to peripheral device connectors.
  Failure to do so may result in wire damage/breakage or PLC failure.

WIRING PRECAUTIONS ⚠ **DANGER**

- Connect the AC power supply to the dedicated terminals specified in this manual.
  If an AC power supply is connected to a DC input/output terminal or DC power supply terminal, the PLC will burn out.
- Make sure to cut off all phases of the power supply externally before attempting installation or wiring work.
  Failure to do so may cause electric shock or damage to the product.
- Make sure to attach the terminal cover, offered as an accessory, before turning on the power or initiating operation after installation or wiring work.
  Failure to do so may cause electric shock.

WIRING PRECAUTIONS ⚠ **CAUTION**

- Do not supply power to the [24+] and [24V] terminals (24V DC service power supply) on the main unit or extension units.
  Doing so may cause damage to the product.
- Perform class D grounding (grounding resistance: 100Ω or less) to the grounding terminal on the main unit and extension units with a wire 2 mm^2 or thicker.
  Do not use common grounding with heavy electrical systems (refer to Section 9.3).
- Do not wire vacant terminals externally.
  Doing so may damage the product.
- Connect the DC power supply to the dedicated terminals specified in this manual.
  If an AC power supply is connected to a DC input/output terminal or DC power supply terminal, the PLC will burn out.
- When drilling screw holes or wiring, make sure cutting or wire debris does not enter the ventilation slits.
  Failure to do so may cause fire, equipment failures or malfunctions.
- Make sure to properly wire the FX2N/FX3U Series extension equipment in accordance with the following precautions.
  Failure to do so may cause electric shock, a short-circuit, wire breakage, or damage to the product.
  - The disposal size of the cable end should follow the dimensions described in this manual.
  - Tightening torque should be between 0.5 and 0.8 N•m.
- Make sure to properly wire to the European terminal board in accordance with the following precautions.
  Failure to do so may cause electric shock, a short-circuit, wire breakage, or damage to the product.
  - The disposal size of the cable end should follow the dimensions described in this manual.
  - Tightening torque should be between 0.22 and 0.25 N•m.
  - Twist the end of strand wire and make sure that there are no loose wires.
  - Do not solder-plate the electric wire ends.
  - Do not connect more than the specified number of wires or electric wires of unspecified size.
  - Affix the electric wires so that neither the terminal block nor the connected parts are directly stressed.
- Make sure to properly wire to the FX Series terminal blocks in accordance with the following precautions.
  Failure to do so may cause electric shock, a short-circuit, wire breakage, or damage to the product.
  - The disposal size of the cable end should follow the dimensions described in this manual.
  - Tightening torque should be between 0.5 and 0.8 N•m.

9.1 Preparation for Wiring

9.1.1 Wiring procedures

Before starting wiring work, make sure that the main power is off.

1 Prepare the parts for wiring.

Prepare the solderless terminals and cables necessary for wiring.

→ **For details, refer to Section 9.2.**

2 Wire the power supply terminals.

Connect the power supply to the terminals [L] and [N].
Provide the power supply circuit with the protection circuit shown in this subsection.

→ **For details, refer to Section 9.4.**

3 Wire the ground terminal [⏚] at a grounding resistance of 100Ω or less (Class D).

Connect a class D ground wire to the terminal.

→ **For details, refer to Section 9.3 and Section 9.4.**

4 Wire the input [X] terminals.

For a type (24V DC input type) common to sink/source input, select sink or source input by the following connection.

- For sink input, connect the [24V] and [S/S] terminals.
- For source input, connect the [0V] and [S/S] terminals.

Connect sensors and switches to the terminals.

→ **For details, refer to Chapter 10.**

5 Wire the output [Y] terminals.

Connect loads to the terminals.

→ **For details, refer to Chapter 12.**

9.1.2 Removal and installation of quick-release terminal block

Removal	Unscrew the terminal block mounting screws [both right and left screws] evenly, and remove the terminal block.
Installation	Place the terminal block in the specified position, and tighten the terminal block mounting screws evenly [both right and left screws]. Tightening torque 0.4 to 0.5 N•m *Pay attention so that the center of the terminal block is not lifted.

9.2 Cable Connecting Procedures

For cable connection, a terminal block or a connector is used.The cable connecting procedures are explained below.

9.2.1 Input/output terminal block (power supply and input/output wiring)

For the main unit, FX2N Series input/output powered extension units/blocks and FX2N/FX3U Series special function blocks, an M3 or M3.5 screw terminal block is used.

1. Applicable products

Product type	Model name
Main unit	All models of FX3G Series main units
Input/output powered extension unit	All models of FX2N Series input/output powered extension units
Input/output extension block	All models of FX2N Series input/output extension blocks (except FX2N-16EX-C, FX2N-16EXL-C and FX2N-16EYT-C)
Extension power supply unit	FX3U-1PSU-5V
Special function block	Refer to the manual for each special function block
FX Series terminal block	All models
Power supply unit	FX2N-20PSU

2. Terminal block screw size

The size of the terminal screws for each product is shown below.
For the solderless terminals, refer to the following page.

Product	Terminal screw	Tightening torque
Main unit FX3U Series special function block FX2N Series input/output powered extension units FX2N Series input/output extension blocks FX2N Series special function block*1	M3	0.5 to 0.8N•m
FX Series terminal block	M3.5	

*1. M3.5 screws may be used for terminals.
For details, refer to the manual for each special extension device.

3. Wire end treatment

The solderless terminal size depends on the terminal screw size and wiring method.

- Use solderless terminals of the following size.
- Tighten the terminals to a torque of 0.5 N•m to 0.8 N•m.

In the case of M3 terminal screw

Main unit, input/output powered extension unit/block and special function block

- When one wire is connected to one terminal

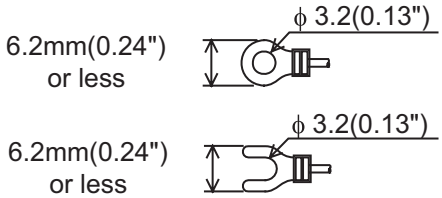

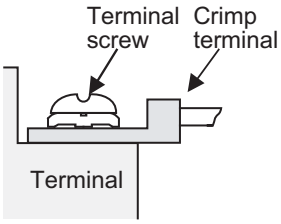

- When two wires are connected to one terminal

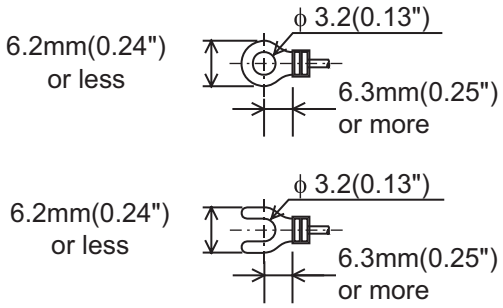

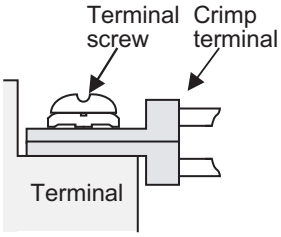

In the case of M3.5 terminal screw

FX Series terminal block, FX2N-20PSU, FX2N-8AD

- When one wire is connected to one terminal

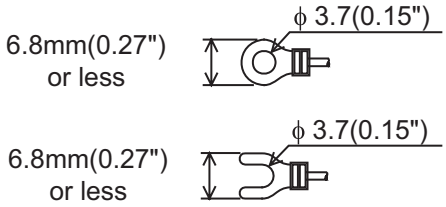

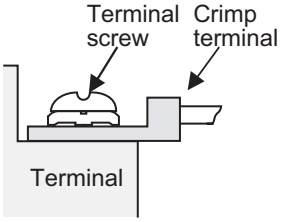

- When two wires are connected to one terminal

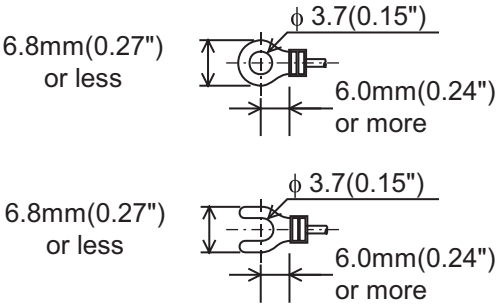

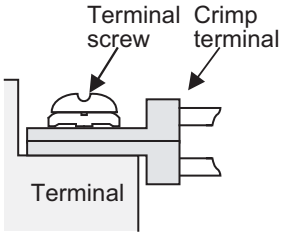

9.2.2 Input/output connectors (FX2N input/output extension blocks)

The input/output connectors of FX2N Series input/output extension blocks (connector type) conform to MIL-C-83503.
Prepare the input/output cables, referring to the following tables.

1. Applicable products

Classification	Model names
Input/output extension blocks	FX2N-16EX-C, FX2N-16EXL-C, FX2N-16EYT-C

2. Preparation of input/output connectors

1) Compliant connectors (commercially available connectors)
Use 20-pin (1-key) sockets conforming to MIL-C-83503.
In advance, make sure that no interference is caused with peripheral parts, such as the connector cover.

2) Input/output cables (our options)
Input/output cables with attached connectors are available.

Model names	Length	Description	Shape
FX-16E-500CAB-S	5m(10'4")	General-purpose input/output cable	• Single wire (Wire color: red) • PLC side: A 20-pin connector
FX-16E-150CAB	1.5m(4'11")	Cables for connecting FX Series terminal block and input/output connector For the connection with FX Series terminal block, refer to the following chapter. → **[20. Terminal Block]**	• Flat cables (with tube) • A 20-pin connector at both ends
FX-16E-300CAB	3m(9'10")		
FX-16E-500CAB	5m(10'4")		
FX-16E-150CAB-R	1.5m(4'11")		• Round multicore cables • A 20-pin connector at both ends
FX-16E-300CAB-R	3m(9'10")		
FX-16E-500CAB-R	5m(10'4")		
FX-A32E-150CAB	1.5m(4'11")	Cables for connecting A Series Model A6TBXY36 connector/terminal block conversion unit and input/output connector type	• Flat cables (with tube) • PLC side: Two 20-pin connectors in 16-point units. • Terminal block side: A dedicated connector • One common terminal covers 32 input/output terminals.
FX-A32E-300CAB	3m(9'10")		
FX-A32E-500CAB	5m(10'4")		

3) Connectors for making input/output cables by users (our options)
The users should prepare the electric wires and pressure bonding tool.

Model name and composition of input/output connector			Applicable electric wire (UL-1061 are recommended) and tool	
Our model name		Details of part (made by DDK Ltd.)	Electric wire size	Pressure bonding tool (made by DDK Ltd.)
FX2C-I/O-CON for flat cable	10-piece set	Solderless connector FRC2-A020-30S	AWG28 (0.1mm^2), 1.27 pitch, 20-core	357J-4674D: Main body 357J-4664N: Attachment
FX2C-I/O-CON-S for bulk wire	5-piece set	Housing HU-200S2-001 Solderless contact HU-411S	AWG22 (0.3mm^2)	357J-5538
FX2C-I/O-CON-SA for bulk wire	5-piece set	Housing HU-200S2-001 Solderless contact HU-411SA	AWG20 (0.5mm^2)	357J-13963

4) Certified connectors (commercially available connectors)
Connectors made by DDK Ltd. shown in Item (3) described in the previous page and connectors made by Matsushita Electric Works, Ltd. shown in the following table

Model name of connector		Compliant electric wires (UL-1061 is recommended)	Pressure bonding tool
Housing	AXW1204A	AWG22 (0.3mm^2) AWG24 (0.2mm^2)	AXY52000
Contact	AXW7221		
Semi-cover	AXW62001A		

9.2.3 Terminal block (for europe) [expansion board and special adapters]

The expansion board and special adapters of a terminal block type have terminal blocks for Europe.

1. Applicable products

Classification	Model names
Expansion Board	FX3G-485-BD, FX3G-2AD-BD, FX3G-1DA-BD
Special Adapters	FX3U-485ADP(-MB), FX3U-4AD-ADP, FX3U-4DA-ADP, FX3U-4AD-PT-ADP, FX3U-4AD-PTW-ADP, FX3U-4AD-PNK-ADP, FX3U-4AD-TC-ADP

2. Electric wires

Compliant electric wires and tightening torque

	Electric wire size (stranded wire/solid wire)	Tightening torque	End treatment
One electric wire	0.3mm^2 to 0.5mm^2 (AWG22 to 20)	0.22 to 0.25N•m	• Remove the coating of the stranded wire, twist the core wires, and connect the wires directly. • Remove the coating from the solid wire, and connect the wire directly.
Two electric wires	0.3mm^2 (AWG22)		
Bar terminal with insulating sleeve	0.3 mm^2 to 0.5 mm^2 (AWG22 to 20) (Refer to the following outline drawing of bar terminal.)		• Bar terminal with insulating sleeve (recommended product) AI 0.5-8WH : Phoenix Contact • Caulking tool CRIMPFOX ZA 3 : Phoenix Contact (CRIMPFOX UD 6 : Phoenix Contact)

3. Treatment of electric wire ends

Treat the ends of stranded wires and solid wires without coating or using bar terminals with insulating sleeve.

- Treatment of stranded wires and solid wires without coating
  - Twist the ends of stranded wires tightly so that loose wires will not stick out.
  - Do not solder-plate the electric wire ends.
- Treatment using bar terminal with insulating sleeve
  It may be difficult to insert the electric wire into the insulating sleeve depending on the thickness of the electric wire sheath. Select the electric wire referring to the outline drawing.

Manufacturer	Model names	Caulking tool
Phoenix Contact	AI 0.5-8WH	CRIMPFOX ZA 3 (CRIMPFOX UD 6)

• Stranded wire/solid wire

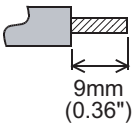

• Bar terminal with insulating sleeve

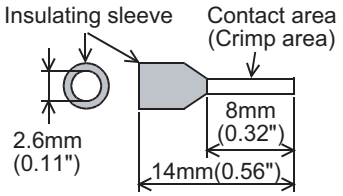

4. Tool

- For tightening the terminal, use a commercially available small screwdriver having a straight form that is not widened toward the end as shown right.

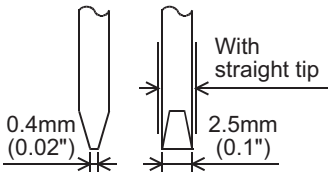

Caution :
If the diameter of screwdriver grip is too small, tightening torque will not be able to be achieved. Use the following recommended screwdriver or an appropriate replacement (grip diameter: approximately 25mm (0.98")).

Manufacturer	Model names
Phoenix Contact	SZS 0.4 x 2.5

9.3 Grounding

Ground the PLC as stated below.

- Perform class D grounding. (Grounding resistance: 100Ω or less)
- Ground the PLC independently if possible.
  If it cannot be grounded independently, ground it jointly as shown below.

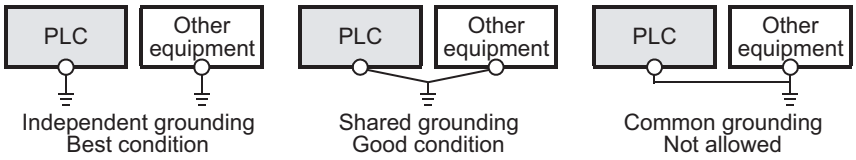

Extension devices of PLC (except expansion board and special adapter)

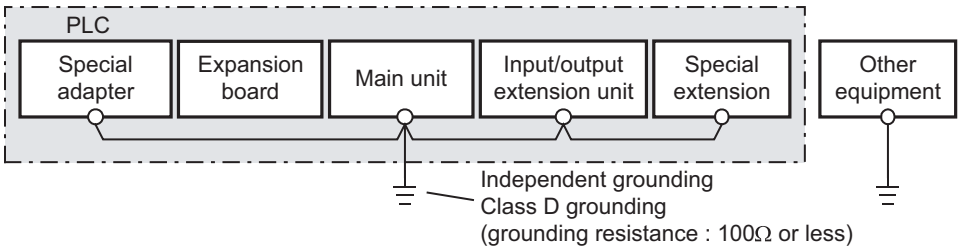

- Use ground wires thicker than AWG14 (2 mm^2).
- Position the grounding point as close to the PLC as possible to decrease the length of the ground wire.

9.4 Examples of External Wiring

9.4.1 Example of input/output wiring with 24V DC service power supply

24V DC service power supply of the main unit can be used as a power supply for loads.

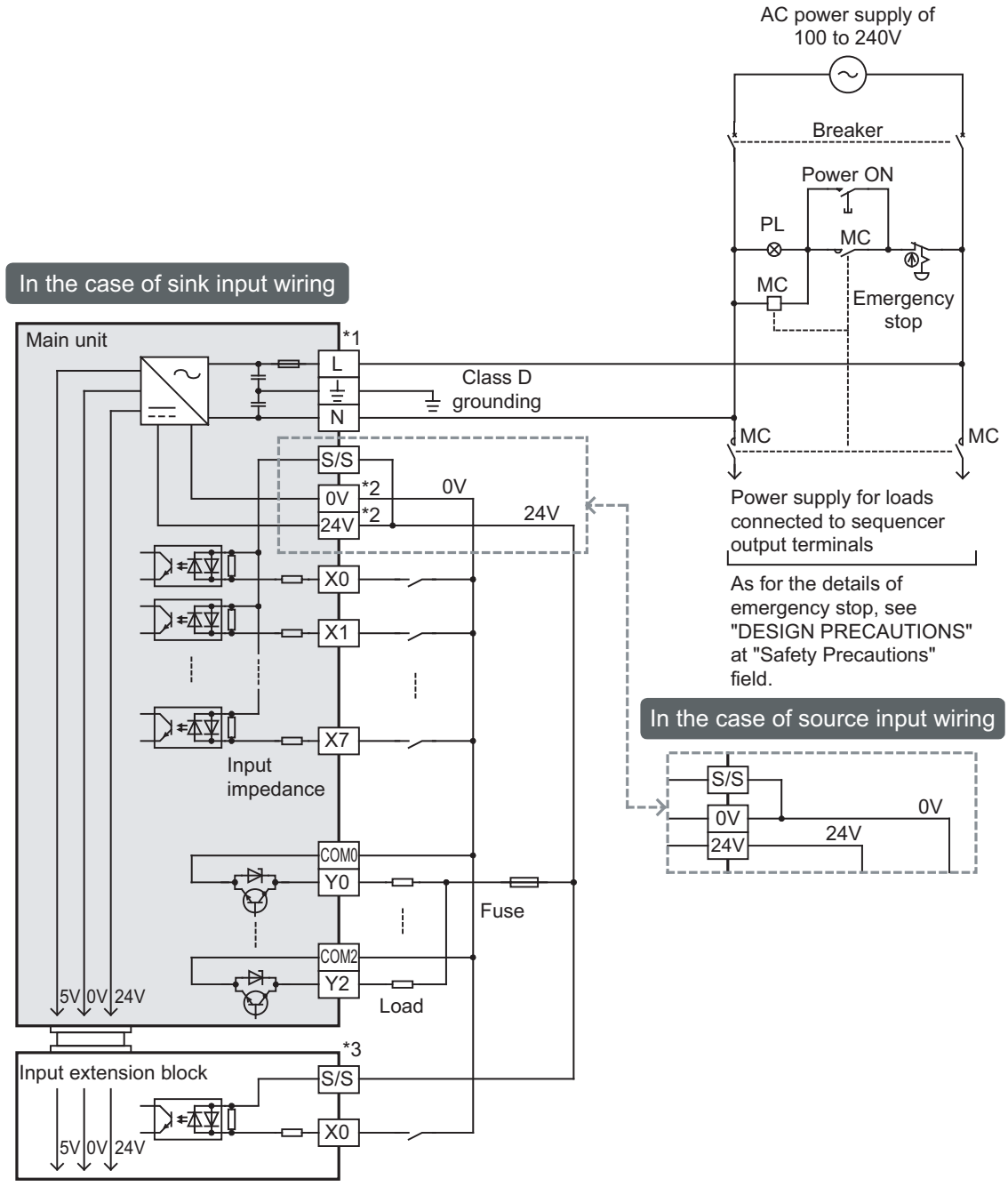

*1 Connect the AC power supply to the L and N terminals (in any case of 100V AC system and 200V AC system). As for the details, see "WIRING PRECAUTIONS" at "Safety Precautions" field.

*2 The "24V" and "0V" terminals are located on the output terminal side. For details on the terminal layout, refer to Section 4.7.

*3 Connect the 24V terminal (in the case of sink input) or the 0V terminal (in the case of source input) to the S/S terminal on the input extension block.

9.4.2 Example of sink input [-common] wiring

An example of sink input [-common] wiring is given below. When connecting input/output powered extension units/blocks, carefully check the signal names on the terminal block because the sink and source input type units/blocks and the sink input type units/blocks vary in signal names on the terminal block.

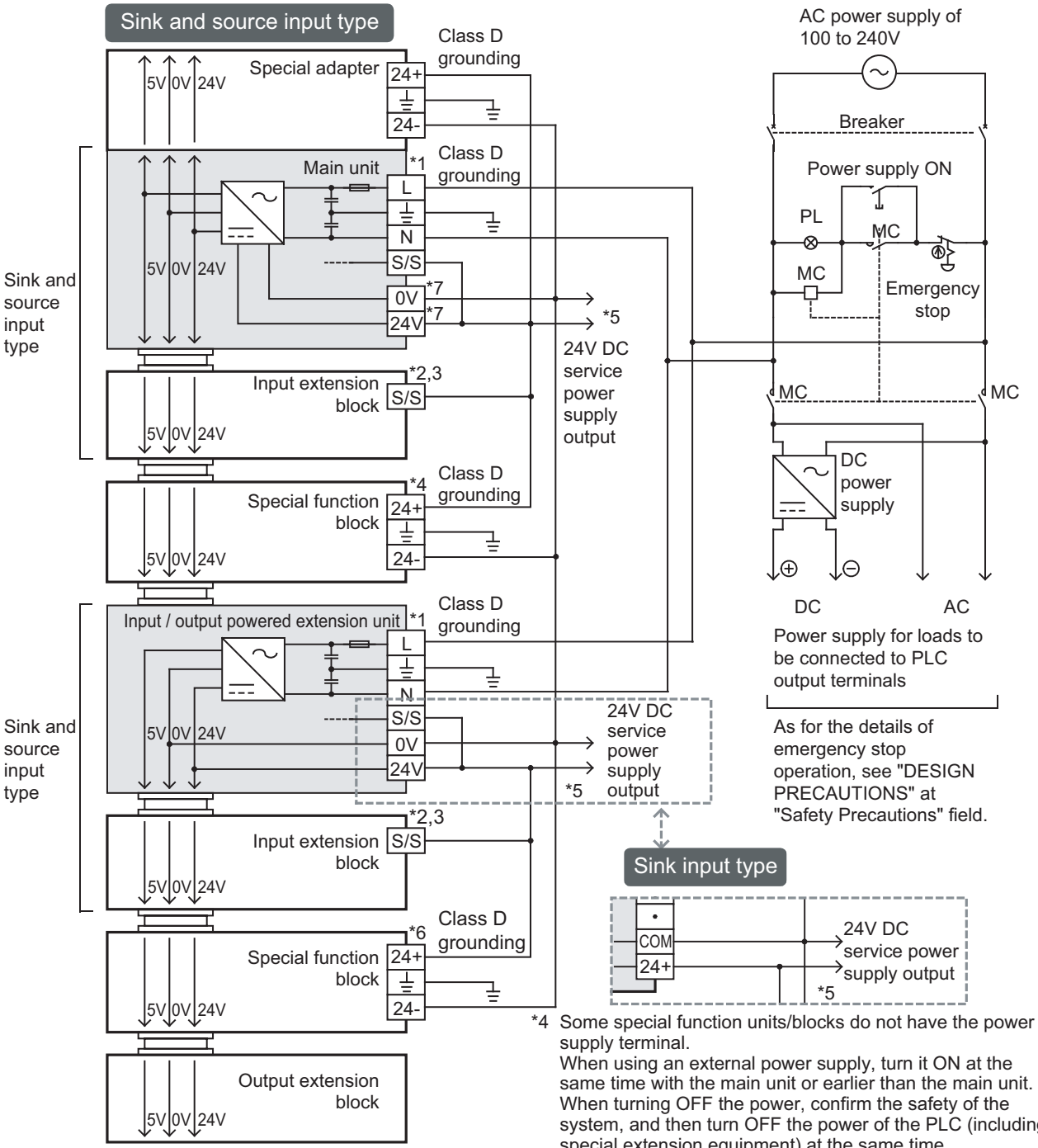

*1 Connect the AC power supply to the L and N terminals (in any case of 100V AC system and 200V AC system).
Make sure that the power is turned ON at the same time in the main unit and extension units or earlier in extension units than the main unit.
For the details, refer to "WIRING PRECAUTIONS" in "Safety Precautions".
As for the details, see "WIRING PRECAUTIONS" at "Safety Precautions" field.

*2 Connect the 24V terminal of the main unit or the input/output extension unit to the S/S terminal of the input extension block.

*3 In the case of the sink input type, the S/S terminal is used as the 24+ terminal.

*4 Some special function units/blocks do not have the power supply terminal.
When using an external power supply, turn it ON at the same time with the main unit or earlier than the main unit.
When turning OFF the power, confirm the safety of the system, and then turn OFF the power of the PLC (including special extension equipment) at the same time.

*5 Do not connect the 24V terminals (24V DC service power supply) of the main unit and the input/output extension unit with each other. Connect the 0V terminal.

*6 Some special extension units/blocks do not have power terminals.
When using an external power supply, turn it ON at the same time with the extension unit or earlier than the extension unit.
When turning OFF the power, confirm the safety of the system, and then turn OFF the power of the PLC (including special extension equipment) at the same time.

*7 The "24V" and "0V" terminals are located on the output terminal side.
For details on the terminal layout, refer to Section 4.7.

9.4.3 Example of source input [+common] wiring

An example of source input [+common] wiring is shown below.

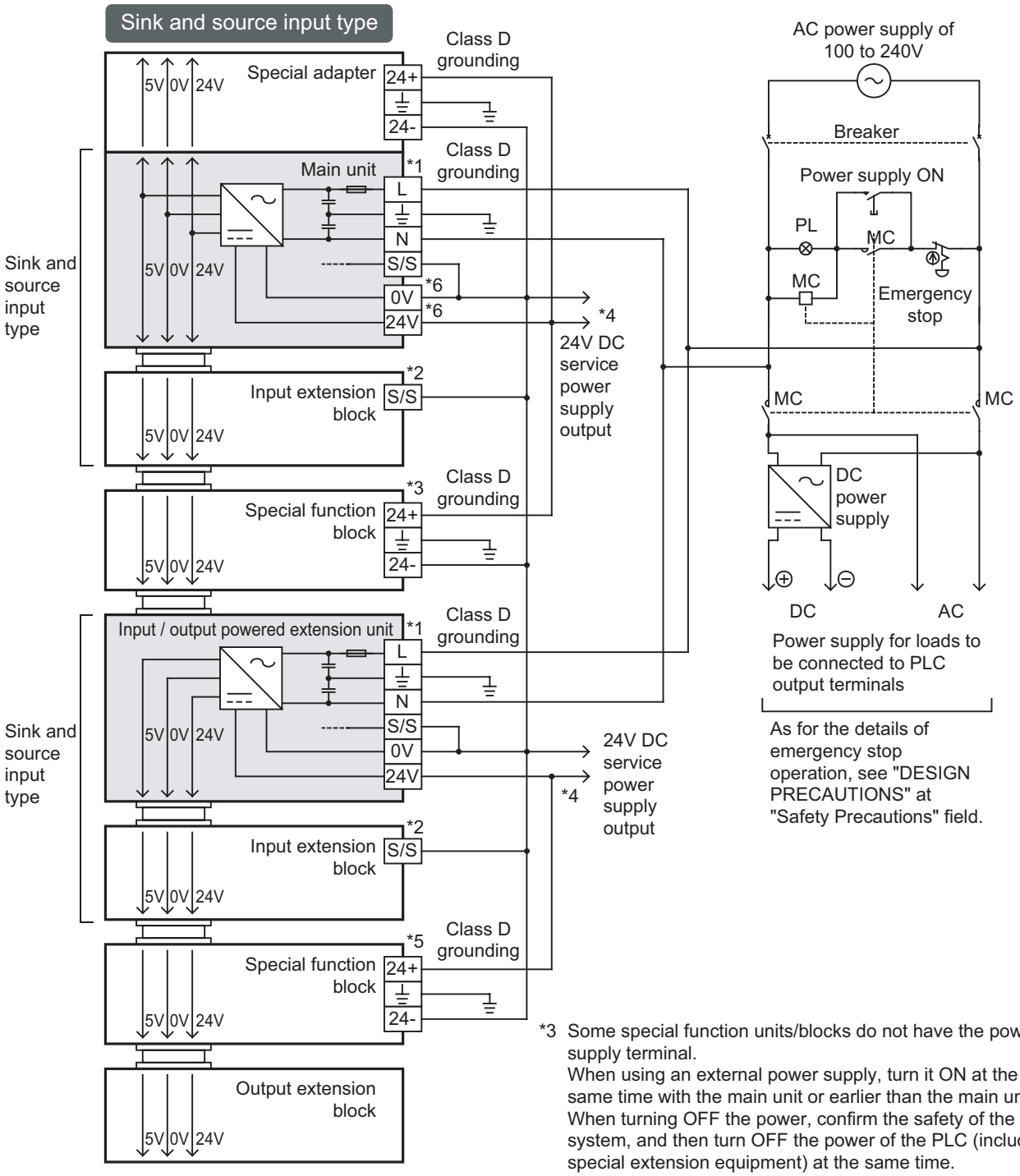

*1 Connect the AC power supply to the L and N terminals (in any case of 100V AC system and 200V AC system).
Make sure that the power is turned ON at the same time in the main unit and extension units or earlier in extension units than the main unit.
For the details, refer to "WIRING PRECAUTIONS" in "Safety Precautions".
As for the details, see "WIRING PRECAUTIONS" at "Safety Precautions" field.

*2 Connect the 0V terminal of the main unit or extension unit to the S/S terminal of the input extension block.

*3 Some special function units/blocks do not have the power supply terminal.
When using an external power supply, turn it ON at the same time with the main unit or earlier than the main unit.
When turning OFF the power, confirm the safety of the system, and then turn OFF the power of the PLC (including special extension equipment) at the same time.

*4 Do not connect the 24V terminals (24V DC service power supply) of the main unit and the input/output extension unit with each other. Connect the 0V terminal.

*5 Some special extension units/blocks do not have power terminals.
When using an external power supply, turn it ON at the same time with the extension unit or earlier than the extension unit.
When turning OFF the power, confirm the safety of the system, and then turn OFF the power of the PLC (including special extension equipment) at the same time.

*6 The "24V" and "0V" terminals are located on the output terminal side.
For details on the terminal layout, refer to Section 4.7.

9.4.4 An external wiring example for the extension power supply unit (sink input [-common])

This example shows a sink input wiring (-common),including the extension power supply unit.When adding an input extension block,check the signal name on the terminal block since the sink/source type and sink type differ from each there.

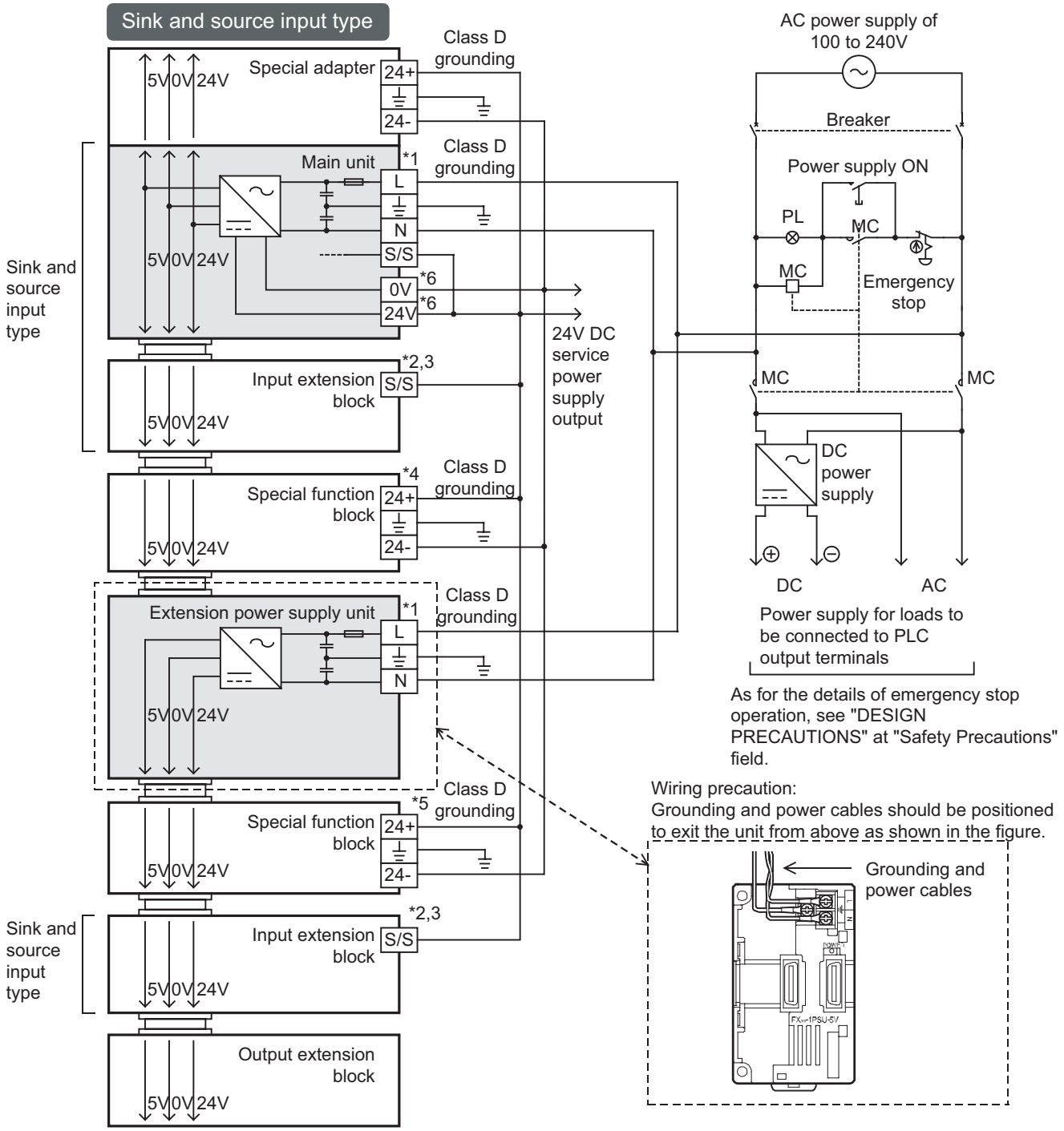

*1 Connect the AC power supply to the L and N terminals (in any case of 100V AC system and 200V AC system).
Make sure that the power is turned ON at the same time in the main unit and extension power supply units or earlier in extension power supply units than the main unit.
As for the details, see "WIRING PRECAUTIONS" at "Safety Precautions" field.

*2 Connect the 24V terminal of the main unit to the S/S terminal of the input extension block.

*3 In the case of the sink input type, the S/S terminal is used as the 24+ terminal.

*4 Some special function units/blocks do not have the power supply terminal.
When using an external power supply, turn it ON at the same time with the main unit or earlier than the main unit.
When turning OFF the power, confirm the safety of the system, and then turn OFF the power of the PLC (including special extension equipment) at the same time.

*5 Some special function blocks do not have the power supply terminals.
When using an external power supply, turn it ON at the same time with the extension power supply unit or earlier than the extension power supply unit.
When turning OFF the power, confirm the safety of the system, and then turn OFF the power of the PLC (including special extension equipment) at the same time.

*6 The "24V" and "0V" terminals are located on the output terminal side.
For details on the terminal layout, refer to Section 4.7.

9.4.5 An external wiring example for the extension power supply unit (source input [+common])

This example shows a source input wiring (+common), including the extension power supply unit.

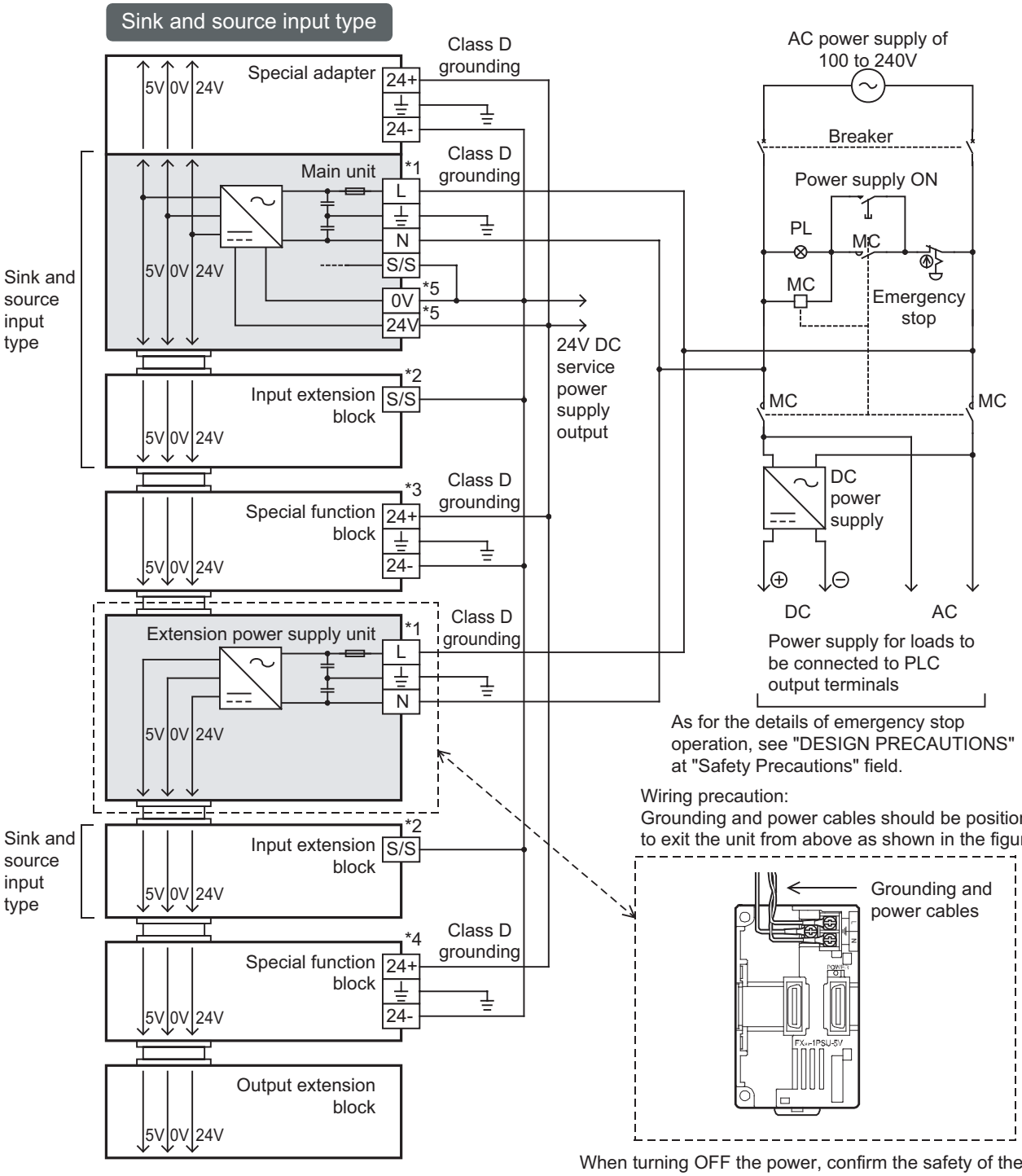

*1 Connect the AC power supply to the L and N terminals (in any case of 100V AC system and 200V AC system).
Make sure that the power is turned ON at the same time in the main unit and extension power supply units or earlier in extension power supply units than the main unit.
As for the details, see "WIRING PRECAUTIONS" at "Safety Precautions" field.

*2 Connect the 0V terminal of the main unit to the S/S terminal of the input extension block.

*3 Some special function units/blocks do not have the power supply terminal.
When using an external power supply, turn it ON at the same time with the main unit or earlier than the main unit.
When turning OFF the power, confirm the safety of the system, and then turn OFF the power of the PLC (including special extension equipment) at the same time.

*4 Some special function blocks do not have the power supply terminals.
When using an external power supply, turn it ON at the same time with the extension power supply unit or earlier than the extension power supply unit.
When turning OFF the power, confirm the safety of the system, and then turn OFF the power of the PLC (including special extension equipment) at the same time.

*5 The "24V" and "0V" terminals are located on the output terminal side.
For details on the terminal layout, refer to Section 4.7.

10. Input Wiring Procedures

DESIGN PRECAUTIONS **DANGER**

- Make sure to have the following safety circuits outside of the PLC to ensure safe system operation even during external power supply problems or PLC failure.
  Otherwise, malfunctions may cause serious accidents.
  1) Most importantly, have the following: an emergency stop circuit, a protection circuit, an interlock circuit for opposite movements (such as normal vs. reverse rotation), and an interlock circuit (to prevent damage to the equipment at the upper and lower positioning limits).
  2) Note that when the PLC CPU detects an error, such as a watchdog timer error, during self-diagnosis, all outputs are turned off. Also, when an error that cannot be detected by the PLC CPU occurs in an input/output control block, output control may be disabled.
  External circuits and mechanisms should be designed to ensure safe machinery operation in such a case.
  3) Note that when the PLC CPU detects an error, such as a watchdog timer error, during self-diagnosis, all outputs are turned off. Also, when an error that cannot be detected by the PLC CPU occurs in an input/output control block, output control may be disabled.
  External circuits and mechanisms should be designed to ensure safe machinery operation in such a case.
  4) Note that when an error occurs in a relay, triac or transistor output device, the output could be held either on or off.
  For output signals that may lead to serious accidents, external circuits and mechanisms should be designed to ensure safe machinery operation in such a case.

DESIGN PRECAUTIONS **CAUTION**

- Do not bundle the control line together with or lay it close to the main circuit or power line. As a guideline, lay the control line at least 100mm (3.94") or more away from the main circuit or power line.
  Noise may cause malfunctions.
- Install module so that excessive force will not be applied to peripheral device connectors.
  Failure to do so may result in wire damage/breakage or PLC failure.

WIRING PRECAUTIONS **DANGER**

- Connect the AC power supply to the dedicated terminals specified in this manual.
  If an AC power supply is connected to a DC input/output terminal or DC power supply terminal, the PLC will burn out.
- Make sure to cut off all phases of the power supply externally before attempting installation or wiring work.
  Failure to do so may cause electric shock or damage to the product.
- Make sure to attach the terminal cover, offered as an accessory, before turning on the power or initiating operation after installation or wiring work.
  Failure to do so may cause electric shock.

WIRING PRECAUTIONS **⚠CAUTION**

- Do not supply power to the [24+] and [24V] terminals (24V DC service power supply) on the main unit or extension units.
  Doing so may cause damage to the product.
- Perform class D grounding (grounding resistance: 100Ω or less) to the grounding terminal on the main unit and extension units with a wire 2 mm^2 or thicker.
  Do not use common grounding with heavy electrical systems (refer to Section 9.3).
- Do not wire vacant terminals externally.
  Doing so may damage the product.
- Connect the DC power supply to the dedicated terminals specified in this manual.
  If an AC power supply is connected to a DC input/output terminal or DC power supply terminal, the PLC will burn out.
- When drilling screw holes or wiring, make sure cutting or wire debris does not enter the ventilation slits.
  Failure to do so may cause fire, equipment failures or malfunctions.
- Make sure to properly wire the FX2N/FX3U Series extension equipment in accordance with the following precautions.
  Failure to do so may cause electric shock, a short-circuit, wire breakage, or damage to the product.
  - The disposal size of the cable end should follow the dimensions described in this manual.
  - Tightening torque should be between 0.5 and 0.8 N•m.
- Make sure to properly wire to the European terminal board in accordance with the following precautions.
  Failure to do so may cause electric shock, a short-circuit, wire breakage, or damage to the product.
  - The disposal size of the cable end should follow the dimensions described in this manual.
  - Tightening torque should be between 0.22 and 0.25 N•m.
  - Twist the end of strand wire and make sure that there are no loose wires.
  - Do not solder-plate the electric wire ends.
  - Do not connect more than the specified number of wires or electric wires of unspecified size.
  - Affix the electric wires so that neither the terminal block nor the connected parts are directly stressed.
- Make sure to properly wire to the FX Series terminal blocks in accordance with the following precautions.
  Failure to do so may cause electric shock, a short-circuit, wire breakage, or damage to the product.
  - The disposal size of the cable end should follow the dimensions described in this manual.
  - Tightening torque should be between 0.5 and 0.8 N•m.

10.1 Before Starting Input Wiring

10.1.1 Sink and source input

The input terminals (X) of the main unit are common to sink/source input of 24V DC internal power.
FX2N Series input/output powered extension units/blocks have input terminals common to sink/source input or only for sink input.

1. Differences between the sink input circuit and the source input circuit

- Sink input [-common]
  Sink input means a DC input signal with current-flow from the input (X) terminal.
  When a sensor with a transistor output is connected, NPN open collector transistor output can be used.

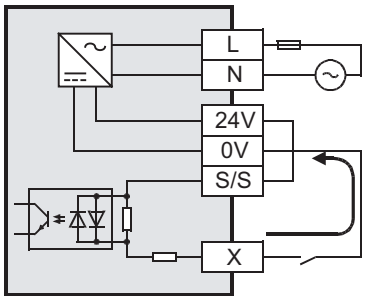

- Source input [+common]
  Source input means a DC input signal with current-flow into the input (X) terminal.
  When a sensor with a transistor output is connected, PNP open collector transistor output can be used.

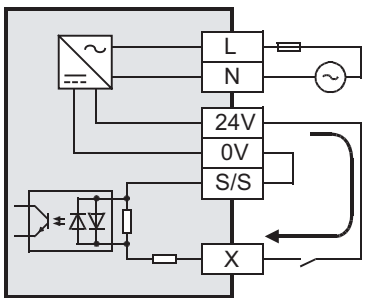

2. Method of switching between sink/source input

To switch the input type to sink or source input, wire the S/S terminal to the 0V or 24V terminal.

- Sink input: [24V] terminal and [S/S] terminal are connected.
- Source input: [0V] terminal and [S/S] terminal are connected.

→ **Refer to Subsection 10.2.3 and Subsection 10.2.4 for wiring examples.**

3. Instructions for using

- Concurrent use of sink/source input
  It is possible to set all input terminals (X) of the main unit to the sink input mode or the source input mode. However, sink and source input terminals cannot be used concurrently.
  - The main unit and input/output powered extension units are individually set to the sink or source input mode.
  - The input mode of an input/output extension block is determined according to the selection of the sink or source input mode on the powered extension unit (power source).
- Caution in selecting model
  A type common to sink/source input and a type only for sink input are both available. Select a proper type.

Differences from FX1N PLCs in input specifications (reference)

FX1N PLCs only for sink input (manuals in Japanese are supplied) and those common to sink/source input (manuals in English are supplied) have different model names.

- In FX1N PLCs only for sink input, the S/S terminal and the 24V terminal are connected unlike in FX3G PLCs.
- FX1N PLCs common to sink/source input are switched to the sink or source input mode by external wiring like FX3G PLCs.

10.2 24V DC input (Sink and source input type)

This section explains handling of 24V DC inputs in the main unit, precautions on input device connection, and external wiring examples.

→ **For the input specifications, refer to Section 4.3**

10.2.1 Handling of 24V DC input

1. Input terminals

Sink input

When a no-voltage contact or NPN open collector transistor output is connected between an input (X) terminal and the 0V terminal and the circuit is closed, the input (X) turns on.
Then, the input display LED lights.

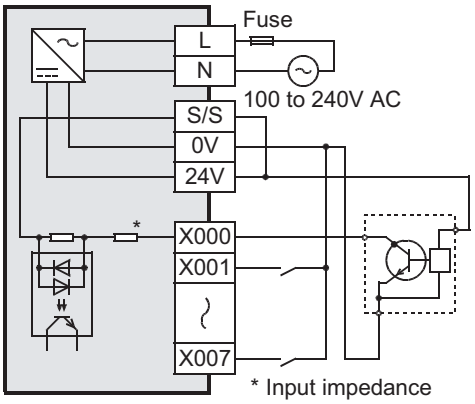

Source input

When a no-voltage contact or PNP open collector transistor output is connected between an input (X) terminal and the 24V terminal and the circuit is closed, the input (X) turns on.
Then, the input display LED lights.

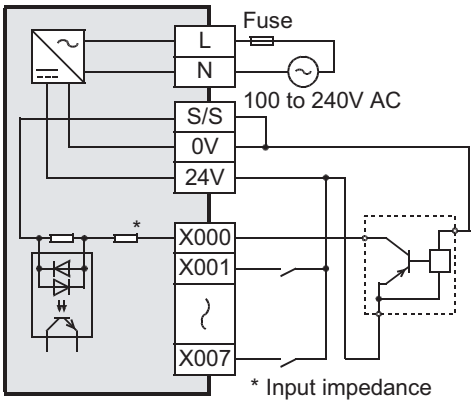

RUN terminal setting

X000 to X017 (up to the largest input number in the main unit[*1]) of the main unit can be used as RUN input terminals by setting parameters.

*1. X000 to X007 in the FX3G-14M□ main unit, and X000 to X015 in the FX3G-24M□ main unit

→ **For the functions of the RUN terminals, refer to Subsection 14.2.1.**

2. Input circuit

Function of input circuit

The primary and secondary circuits for input are insulated with a photocoupler, and the second circuit is provided with a C-R filter.
The C-R filter is designed to prevent malfunctions caused by chattering of the input contact and noise from the input line.
There is a delay of approx. 10ms in response to input-switching from ON to OFF and from OFF to ON.

Change of filter time

X000 to X007 have digital filters, and the filter time can be changed in increments of 1ms in the range from 0 to 15ms through special data register (D8020). When 0 is specified for the time, the input filter values are set as shown in the following table.

Input number	Input filter value when 0 is specified
X000, X001, X003, X004	10μs
X002, X005, X006, X007	50μs

3. Input sensitivity

The PLC input current and input sensitivity are shown in the following table.
When there is a series diode or resistance at the input contact or there is a parallel resistance or leakage current at the input contact, wire the terminals in accordance with the following table.

→ **For the instructions for connecting input devices, refer to Subsection 10.2.2.**

Item		X000 to X007	X010 to max input number of the main unit
Input voltage		24V DC ±10%	
Input current		7mA	5mA
Input sensitivity current	ON	4.5mA or more	3.5mA or more
	OFF	1.5mA or less	1.5mA or less

10.2.2 Instructions for connecting input devices

1. In the case of no-voltage contact

The input current of this PLC is 7mA/24V DC. (5mA/24V DC in X010 or later)
Use input devices applicable to this minute current.
If no-voltage contacts (switches) for large current are used, contact failure may occur.

Input number	Input current
X000 to X007	7mA/24V DC
X010 or more	5mA/24V DC

<Example> Products of OMRON

Type	Model name
Microswitch	Models Z, V and D2RV
Proximity switch	Model TL

Type	Model name
Operation switch	Model A3P
Photoelectric switch	Model E3S

2. In the case of input device with built-in series diode

The voltage drop of the series diode should be approx. 4V or less.
When lead switches with a series LED are used, up to two switches can be connected in series.
Also make sure that the input current is over the input-sensing level while the switches are ON.

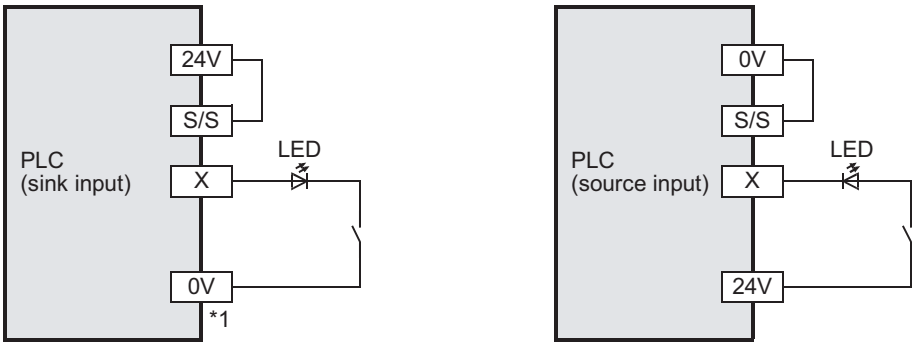

*1 In the case of a type only for sink input, connect the device to the COM terminal.

3. In the case of input device with built-in parallel resistance

Use a device having a parallel resistance, Rp, of 15kΩ or more.
If the resistance is less than 15kΩ, connect a bleeder resistance, Rb, obtained by the following formula as shown in the following figure.

$$Rb \leqq \frac{4Rp}{15\text{-}Rp}(k\Omega)$$

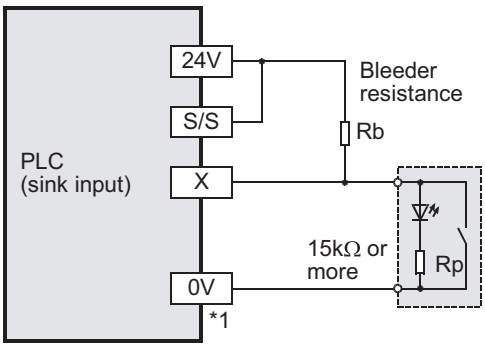

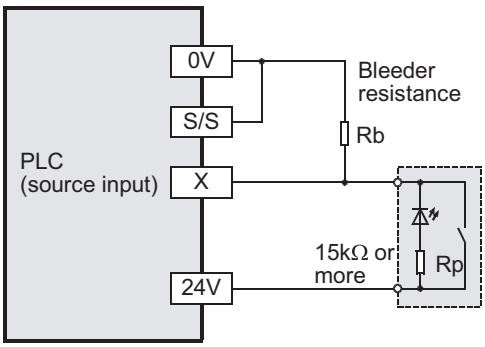

*1 In the case of a type only for sink input, connect the device to the COM terminal.

4. In the case of 2-wire proximity switch

Use a two-wire proximity switch whose leakage current, Iℓ is 1.5 mA or less when the switch is off.
When the current is 1.5mA or more, connect a bleeder resistance, Rb, determined by the following formula as shown in the following figure.

$$Rb \leqq \frac{6}{I\ell\text{-}1.5}(k\Omega)$$

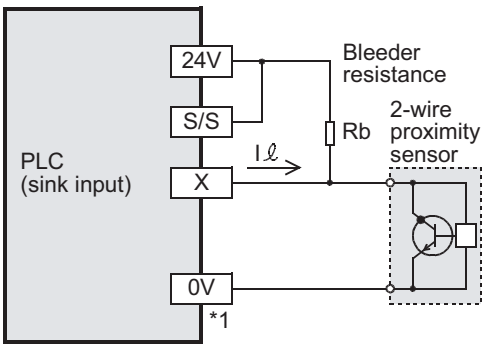

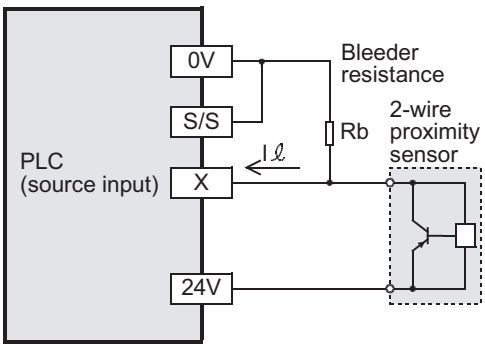

*1 In the case of a type only for sink input, connect the device to the COM terminal.

10.2.3 Examples of external wiring (sink input)

Sink and source input type

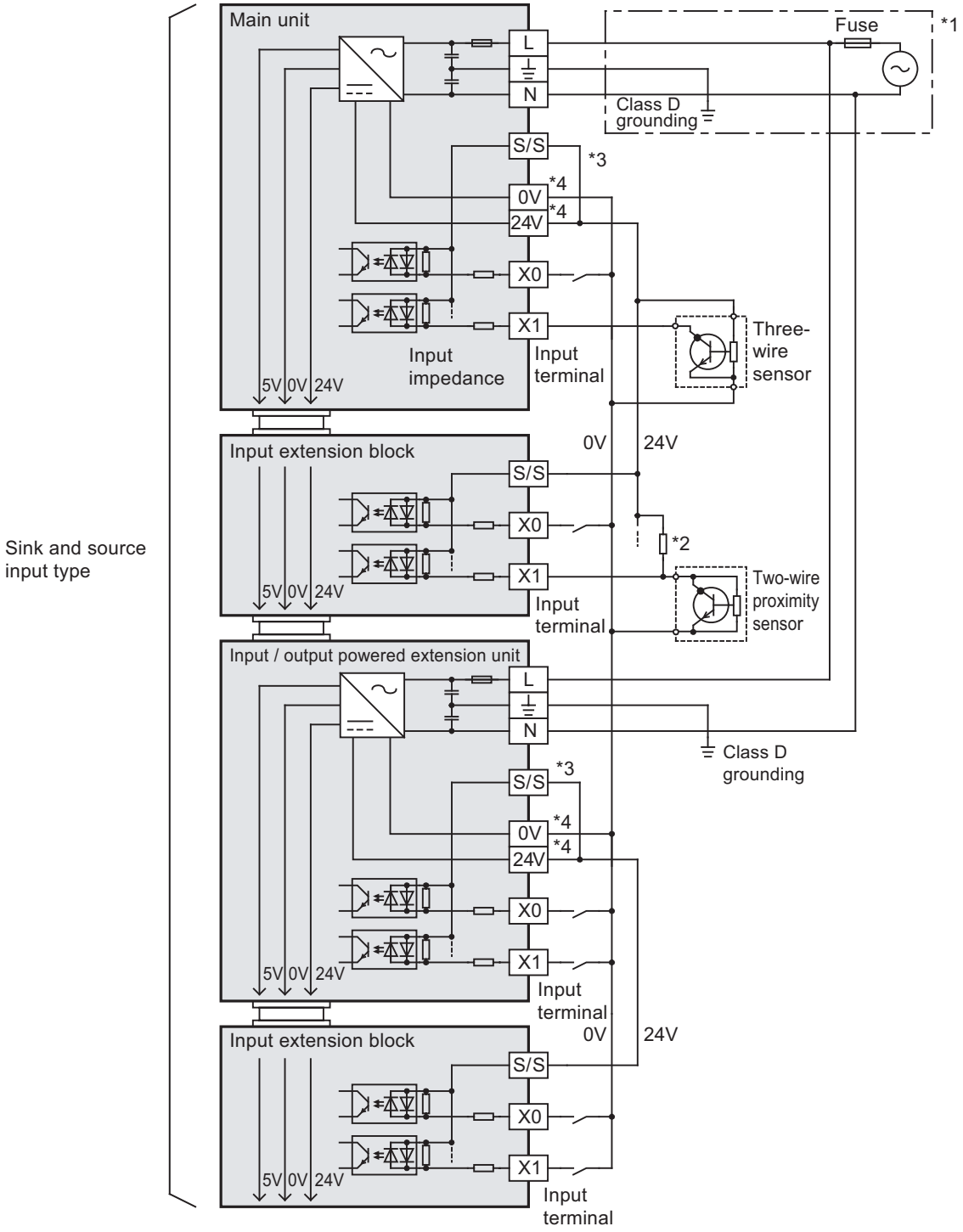

*1 Handle the power supply circuit correctly in accordance with Chapter 9 "Preparation for Wiring and Power Supply Wiring Procedures."

*2 For an input device having a parallel resistance or a two-wire proximity switch, a bleeder resistance may be required.

*3 In the case of sink input wiring,short-circuit the terminals of the extension units as well as the S/S terminal and the 24V terminal of the main unit.

*4 The "24V" and "0V" terminals are located on the output terminal side.
For details on the terminal layout, refer to Section 4.7.

Use of input/output extension units/blocks of sink input type

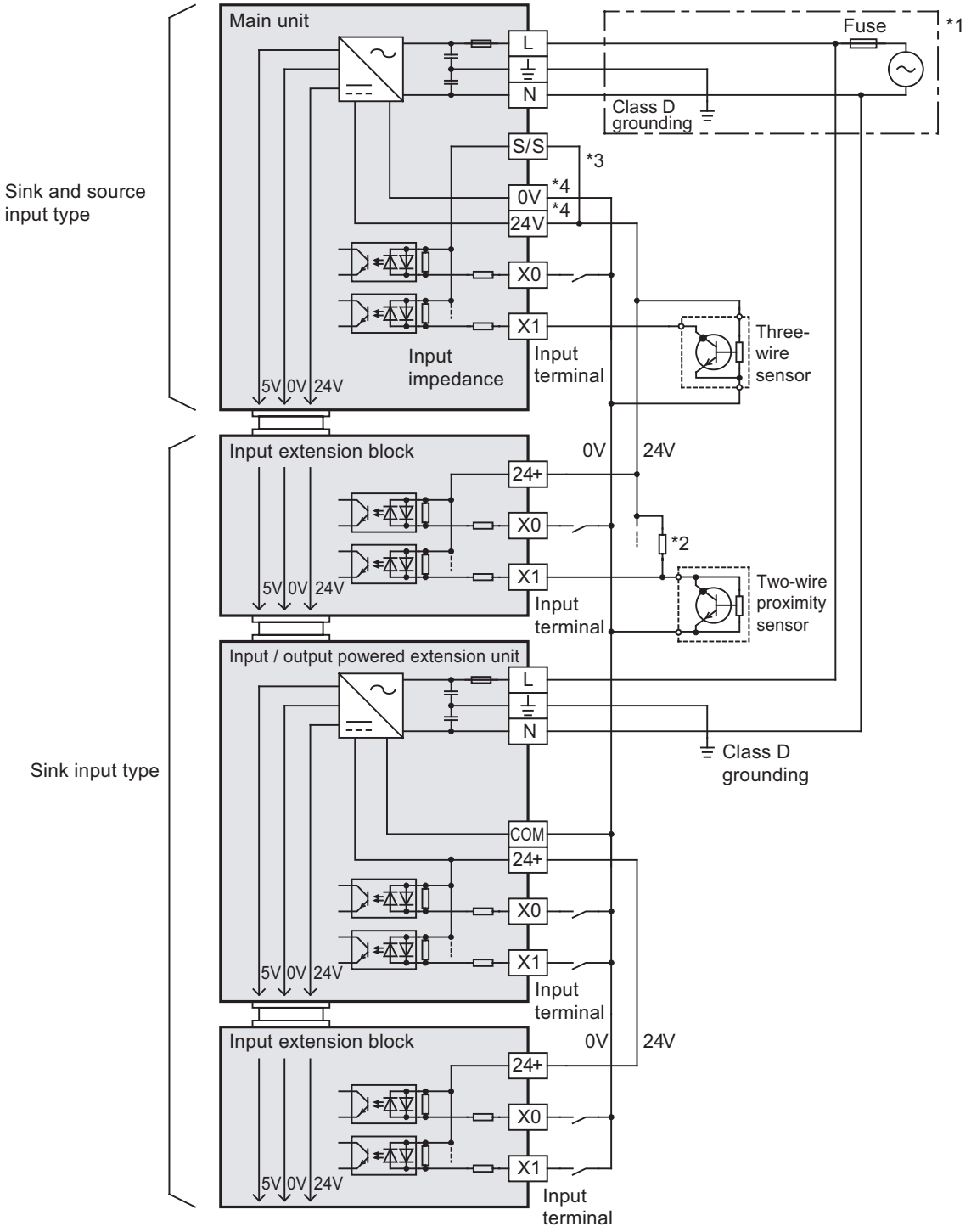

*1 Handle the power supply circuit correctly in accordance with Chapter 9 "Preparation for Wiring and Power Supply Wiring Procedures."

*2 For an input device having a parallel resistance or a two-wire proximity switch, a bleeder resistance may be required.

*3 In the case of sink input wiring, short-circuit the S/S terminal and the 24V terminal of the main unit.

*4 The "24V" and "0V" terminals are located on the output terminal side.
For details on the terminal layout, refer to Section 4.7.

10.2.4 Examples of external wiring (source input)

Sink and source input type

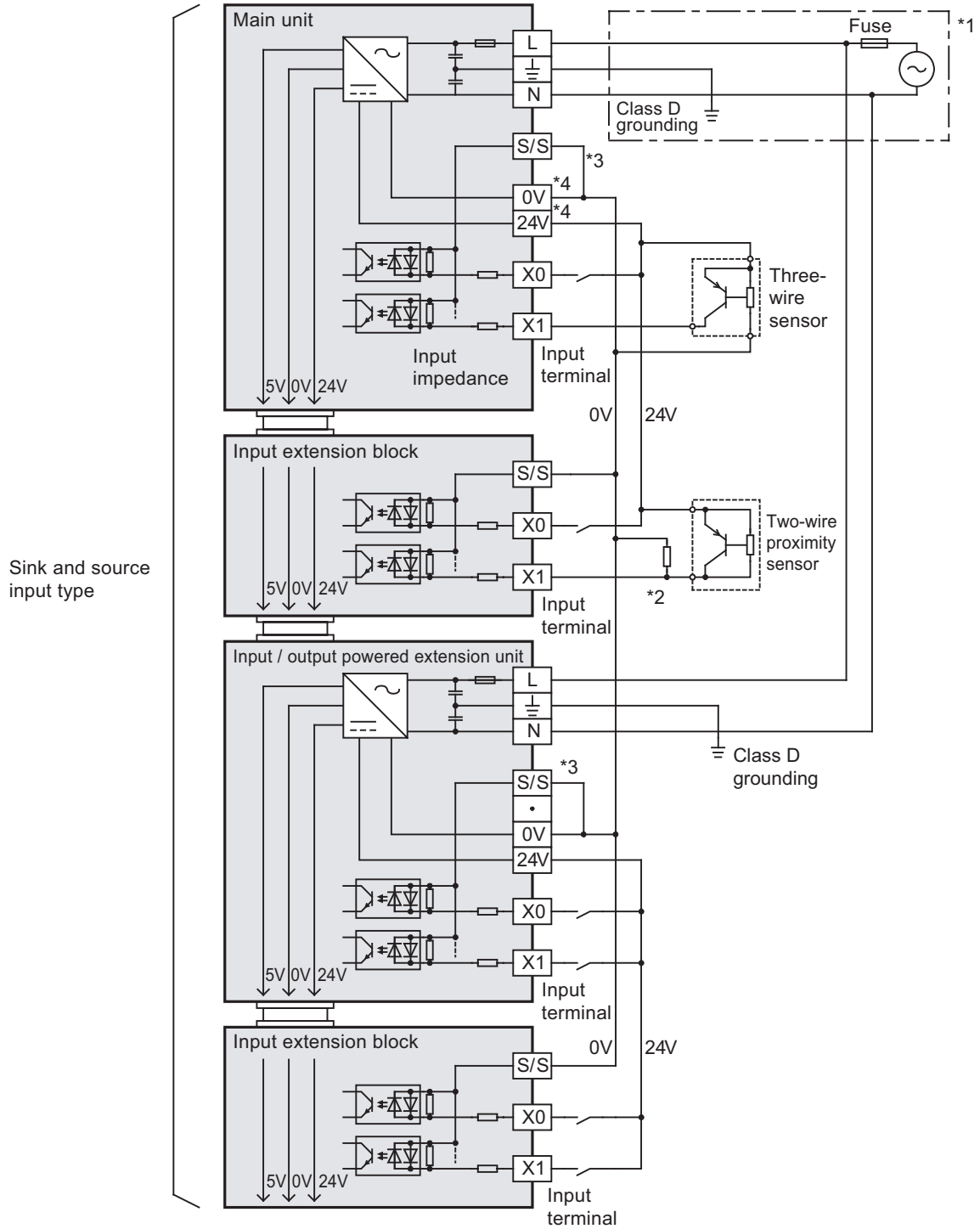

*1 Handle the power supply circuit correctly in accordance with Chapter 9 "Preparation for Wiring and Power Supply Wiring Procedures."

*2 For an input device having a parallel resistance or a two-wire proximity switch, a bleeder resistance may be required.

*3 In the case of source input wiring, short-circuit the terminals of the extension units as well as the S/S terminal and the 0V terminal of the main unit

*4 The "24V" and "0V" terminals are located on the output terminal side. For details on the terminal layout, refer to Section 4.7.

10.3 100V AC Input

10.3.1 Input specifications

Main units of a 100V AC input type are not available.
Select the input for the input/output powered extension units/blocks.

→ **For the specifications on input/output powered extension units, refer to Chapter 15.**
→ **For the specifications on input/output extension blocks, refer to Chapter 16.**

10.3.2 Handling of 100V AC Input

1. Input terminal

When voltage of 100 to 120V AC is applied between the input terminal and COM terminal, the input terminal is turned on. The input display LED lights.
Do not connect the COM terminal of an AC input type input/output powered extension unit/block with the COM terminal of a DC system.

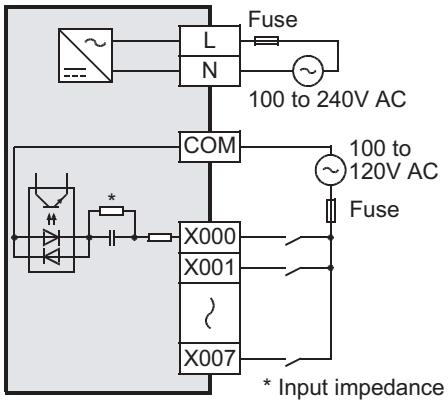

2. Input circuit

The primary input circuit and the secondary input circuit are insulated with a photocoupler.
There is a delay of approx. 25 to 30ms in response to input switching from ON to OFF and from OFF to ON.

3. Input sensitivity

The input current and input sensitivity of these PLCs are shown in the following table.

Item		Specifications	
Input voltage		100 to 120V AC +10%, -15% 50/60Hz	
Input current		6.2 mA/110V 60Hz 4.7 mA/100V 50Hz	Percentage of simultaneous power-on: 70% or less
Input sensitivity	ON	3.8mA/80V AC	
	OFF	1.7mA/30V AC	

10.3.3 Examples of external wiring (100V AC input)

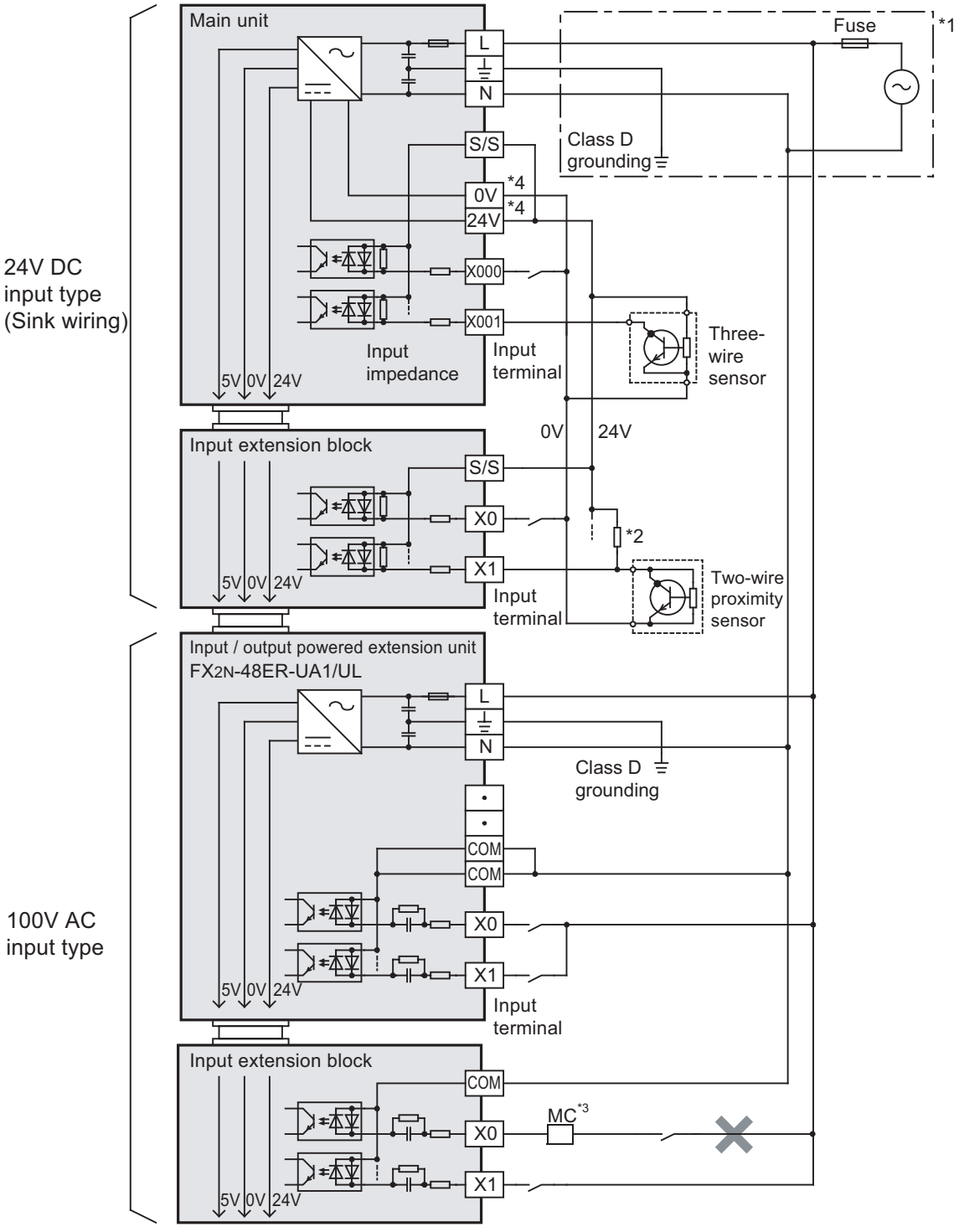

*1 Handle the power supply circuit correctly in accordance with Chapter 9 "Preparation for Wiring and Power Supply Wiring Procedures."
*2 For an input device having a parallel resistance or a two-wire proximity switch, a bleeder resistance may be required
*3 Do not take input signals from loads generating surge.
*4 The "24V" and "0V" terminals are located on the output terminal side.
For details on the terminal layout, refer to Section 4.7.

10.4 Input Interruption (I00□ to I50□)

The PLC (main unit) is provided with an input interruption function and has six interruption input points.
Make sure that the ON duration or OFF duration of interruption input signals is 10μs or more (X000, X001, X003 and X004) or 50μs or more (X002 and X005).

→ **For details on programming, refer to the programming manual.**

10.4.1 Allocation of pointers to input numbers (input signal ON/OFF duration)

Input number	Interrupt pointer		Interrupt disable control	ON or OFF duration of input signal
	Interruption on leading edge	Interruption on trailing edge		
X000	I001	I000	M8050	10μs or more
X001	I101	I100	M8051	
X002	I201	I200	M8052	50μs or more
X003	I301	I300	M8053	10μs or more
X004	I401	I400	M8054	
X005	I501	I500	M8055	50μs or more

10.4.2 Cautions for input interruption

1. Non-overlap of input numbers

The input terminals X000 to X005 can be used for high-speed counter, input interruption, pulse catch, SPD, ZRN and DSZR instructions and general-purpose inputs.
Take care not to overlap the input numbers.

Example:
When the input interrupt pointer "I001" is used, X000 is occupied. Therefore, it is impossible to use C235, C241, C244, C246, C247, C249, C252 and C254, input interruption pointer I000, pulse catch contact M8170 and SPD, ZRN and DSZR instructions at the same time.

10.5 Pulse Catch (M8170 to M8175)

The PLC (main unit) is provided with a pulse catch function and has 6 pulse catch input points.

→ **For details on programming, refer to the programming manual.**

10.5.1 Allocation of special memories to input numbers (ON duration of input signals)

Input number	Contact on sequence program	ON duration of input signal
X000	M8170	10μs or more
X001	M8171	
X002	M8172	50μs or more
X003	M8173	10μs or more
X004	M8174	
X005	M8175	50μs or more

10.5.2 Cautions for pulse catch

1. Non-overlap of input numbers

The input terminals X000 to X005 can be used for high-speed counter, input interruption, pulse catch, speed detection (SPD) instructions and general-purpose input.
Take care not to overlap the input numbers.

Example:
When the C235, C241, C244, C246, C247, C249, C252 and C254 is used, X000 is occupied. Therefore, it is impossible to use pulse catch input contact M8170.

10.6 Pulse width/Pulse period measurement function (Supported in Ver. 1.10 or later)

Four input points in the PLC (main unit) can be used for the pulse width/period measurement function which enables measurement of the pulse width or pulse frequency in units of 10μs.

→ **For details on programming, refer to the programming manual.**

10.6.1 Allocation of special memories to input numbers

Input number	Pulse width/ Pulse period measurement flag	Pulse period measurement mode	Ring counter value for rising edge*1 [in units of 1/6μs]	Ring counter value for falling edge*1 [in units of 1/6μs]	Pulse width/ Pulse period*1*2 (in units of 10μs)
X000	M8076	M8080	D8075, D8074	D8077, D8076	D8079, D8078
X001	M8077	M8081	D8081, D8080	D8083, D8082	D8085, D8084
X003	M8078	M8082	D8087, D8086	D8089, D8088	D8091, D8090
X004	M8079	M8083	D8093, D8092	D8095, D8094	D8097, D8096

*1. Cleared when PLC switches from STOP to RUN.

*2. The pulse width which can be measured is a minimum of 10μs and a maximum of 100s.
The pulse period which can be measured is a minimum of 20μs.

10.6.2 Cautions for pulse width/period measurement function

1. **Non-overlap of input numbers**
The input terminals X000, X001, X003 and X004 can be used for high-speed counter, input interruption, pulse catch, speed detection (SPD) instructions and general-purpose input.
Take care not to overlap the input numbers.
However, overlap of input numbers is allowed for input interruptions.

   Example:
   When the pulse width/period measurement flag M8076 is used, X000 is occupied. Therefore, it is impossible to use C235, C241, C244, C246, C247, C249, C252 and C254, pulse catch contact M8170, SPD, ZRN and DSZR instructions at the same time.

2. **When the pulse width/period measurement function and high-speed counters are used together, the overall frequency of high-speed counters is affected.**

→ **For more details, refer to Section 11.7.**

3. **Make sure that the total frequency of four input channels is 50kHz or less when using the pulse width/period measurement function.**

→ **For details on programming, refer to the programming manual.**

11. Use of High-speed Counters

11.1 Outline

High-speed counters use input terminals X000 to X007 of the main unit for inputs, and offer counting up to 60kHz (1 phase).
Input terminals not used for high-speed counters are available for general-purpose inputs.

→ **For the input specifications for X000 to X007 of the main unit, refer to Section 10.2.**

11.2 Types of Counting and Operations

The main unit has built-in 32-bit high speed bi-directional counters (1-phase 1-count input, 1-phase 2-count input and 2-phase 2-count input).
For some high-speed counters, external reset input terminals or external start input terminals (start of counting) can be selected.

11.2.1 Types and input signal forms

The types and input signals (waveforms) of high-speed counters (1-phase 1-count input, 1-phase 2-count input and 2-phase 2-count input) are shown below.

Counter type	Input signal form	Counting direction
1-phase 1-count input		Down-count or up-count is specified by turning on or off M8235 to M8245. ON:Down-counting OFF:Up-counting
1-phase 2-count input	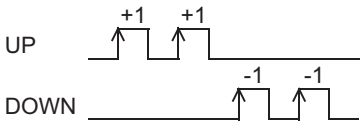	Up-count or down-count The counting direction can be checked with M8246 to M8250. ON:Down-counting OFF:Up-counting
2-phase 2-count input	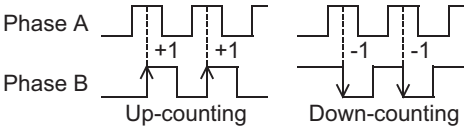	Automatic up-count or down-count according to change in input status of phase A/B The counting direction can be checked with M8251 to M8255. ON:Down-counting OFF:Up-counting

11.2.2 High-speed counter device notations

The input terminal assignments for FX3G PLC high-speed counters can be switched when used in combination with a special auxiliary relay. This section classifies these high-speed counter devices under the following notations. Note that an "(OP)" input cannot be programmed.

Standard Device Numbers	Switched Device Numbers
C248	C248(OP)
C253	C253(OP)
C254	C254(OP)

11.2.3 Cautions in connecting mating device

Encoders with the output forms in the following table can be connected to the input terminals. (The encoders may not function correctly depending on electrical compatibility. Check the specifications in advance.)
Voltage output type encoders and absolute encoders cannot be connected to the high-speed counter input terminals.

Terminals for connecting	Output form that can be directly connected
Input terminals of main unit	Open collector transistor output form (applicable to 24V DC)

11.3 List of Device Numbers and Functions

→ **For details on the counter number (OP), refer to Subsection 11.2.2**

Counter type	Device No. (counter)	Response Frequency*1 (kHz)	Data length	External reset input terminal	External start input terminal
1-phase 1-count input	C235	60	32-bit bi-directional counter	None	None
	C236				
	C237	10			
	C238	60			
	C239				
	C240	10			
	C241	60		Provided	None
	C242	10			
	C243				
	C244			Provided	Provided
	C245				
1-phase 2-count input	C246 C248(OP)	60	32-bit bi-directional counter	None	None
	C247 C248	10		Provided	None
	C249 C250			Provided	Provided
2-phase 2-count input	C251 C253(OP)	30	32-bit bi-directional counter	None	None
	C254(OP)	5			
	C252 C253			Provided	None
	C254 C255			Provided	Provided

*1. When using multiple high-speed counters, make sure that the sum of used frequency does not exceed the overall frequency.

→ **For details on the overall frequency, refer to Section 11.7.**

11.4 Allocation of Device Numbers to Input Numbers

The high-speed counter numbers are allocated to the input terminals X000 to X007 as shown in the following table. The input terminals not allocated for high-speed counters can be used as general input terminals.

11.4.1 Allocation table

U: Up-count input D: Down-count input A: A-phase input B: B-phase input
R: External reset input S: External start input

Counter type	Counter No.	Input allocation							
		X000	X001	X002	X003	X004	X005	X006	X007
1-phase 1-count input	C235	U/D							
	C236		U/D						
	C237			U/D					
	C238				U/D				
	C239					U/D			
	C240						U/D		
	C241	U/D	R						
	C242			U/D	R				
	C243					U/D	R		
	C244	U/D	R					S	
	C245			U/D	R				S
1-phase 2-count input	C246	U	D						
	C247	U	D	R					
	C248				U	D	R		
	C248(OP)*1				U	D			
	C249	U	D	R				S	
	C250				U	D	R		S
2-phase 2-count input	C251	A	B						
	C252	A	B	R					
	C253				A	B	R		
	C253(OP)*1				A	B			
	C254	A	B	R				S	
	C254(OP)*1							A	B
	C255				A	B	R		S

*1. When a special auxiliary relay is driven in a program, the input terminals and their associated functions are switched.

→ **For the function switching method, refer to Subsection 11.8.2.**

11.4.2 Restriction of redundant use of input numbers

The input terminals X000 to X007 can be used for high-speed counters, input interruption, pulse catch, SPD, ZRN and DSZR instructions and general-purpose inputs. Take care not to overlap the input numbers.

For example, when C251 is used, X000 and X001 are occupied. Therefore, it is impossible to use C235, C236, C241, C244, C246, C247, C249, C252 and C254, input interruption pointers I000 and I101, pulse catch contacts M8170 and M8171 and SPD, ZRN and DSZR instructions at the same time.

11.5 Handling of High-speed Counters

11.5.1 1-phase 1-count input

Examples of program

1) For C235

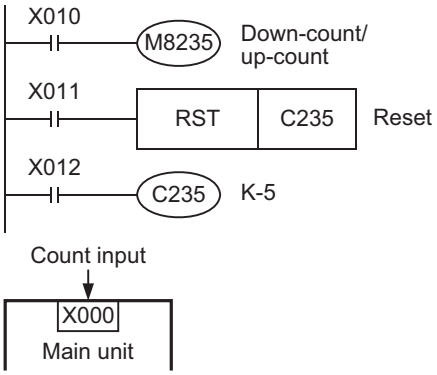

- C235 counts the number of times the input terminal X000 switches from OFF to ON while X012 is on.
- While X011 is on, the counter resets when RST instruction is executed.
- The counters C235 to C245 switch to the down-count or up-count mode by turning on or off M8235 to M8245.

2) For C244

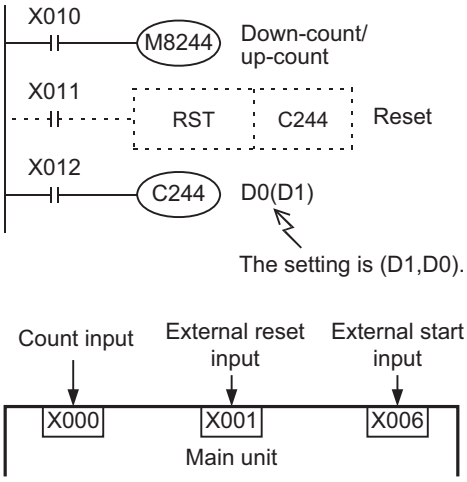

- C244 starts counting immediately when the input terminal X006 turns on while X012 is on. The count input terminal is X000. The setting for this example is the data of the indirectly designated data register (D1,D0).
- C244 can be reset by X011 on the sequence. For C244, X001 is allocated as the external reset input. The counter resets immediately when X001 turns on.
- The counters C235 to C245 switch to the down-count or up-count mode by turning on or off M8235 to M8245.

Example of operation

The above counter C235 operates as shown below.

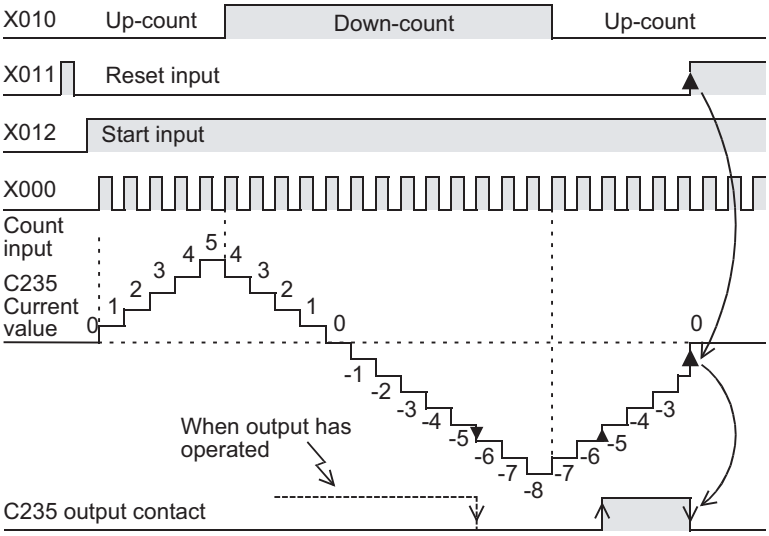

C235 is set to the up-count or down-count mode through interruption by the count input X000.

- When the current value increases from -6 to -5, the output contact is set, and when the value decreases from -5 to -6, it is reset.
- The current value increases and decreases regardless of the operation of the output contact. However, when the counter's value increments from 2,147,483,647, it changes to -2,147,483,648. In the same manner, when it decrements from -2,147,483,648, it changes to 2,147,483,647. (This type of counter is called a ring counter.)
- When RST instruction is executed after the reset input X011 turns on, the current counter's value resets to 0, and the output contact is restored.
- The current value, output contact operation and reset status of counters are backed up (kept) even if the power is turned off.

11.5.2 1-phase 2-count input

These counters are 32-bit up-count/down-count binary counters.
The operations of the output contact according to the current value are the same as those of the above-mentioned 1-phase 1-count input high-speed counters.

Examples of program

1) For C246

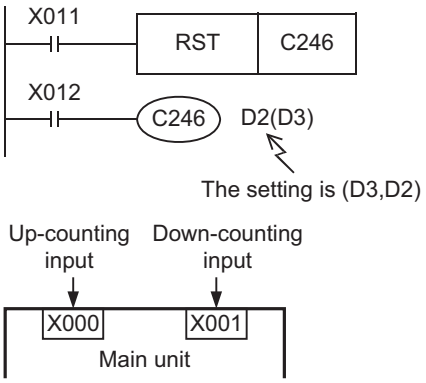

- While X012 is on, C246 increments the value when the input terminal X000 switches from OFF to ON and decrements the value when the input terminal X001 switches from OFF to ON.
- The down-count/up-count operations of C246 to C250 can be monitored through the ON/OFF operations of M8246 to M8250.

  ON: Down-counting
  OFF: Up-counting

2) For C249

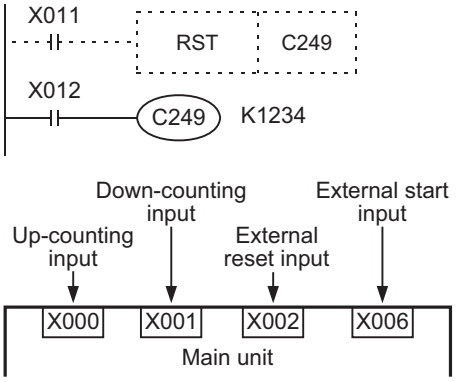

- While X012 is on, C249 starts counting immediately when the input terminal X006 turns on.
  The up-counting input terminal is X000, and the down-counting input terminal is X001.
- C249 can be reset on the sequence by X011.
  For C249, X002 is allocated as reset input. When X002 turns on, C249 is immediately reset.
- The down-count/up-count operations of C246 to C250 can be monitored through the ON/OFF operations of M8246 to M8250.

  ON: Down-counting
  OFF: Up-counting

11.5.3 2-phase 2-count input

These counters are 32-bit up-count/down-count binary counters.
The operations of the output contact according to the current value are the same as those of the above-mentioned 1-phase 1-count input high-speed counters.

Examples of program

1) For C251

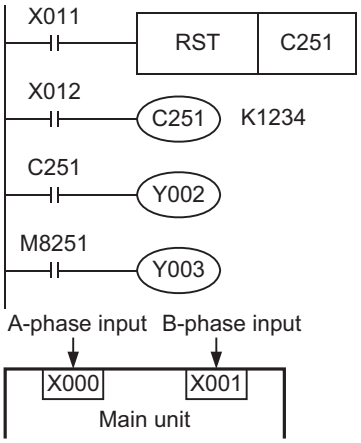

- While X012 is on, C251 counts the operation of the input terminals X000 (A-phase) and X001 (B-phase) through interruption.
- While X011 is turned on, the counter is reset when RST instruction is executed.
- When the current value exceeds the setting, Y002 turns on, and when the current value becomes lower than the setting, Y002 turns off.
- Y003 turns on (down-count) or off (up-count) according to the counting direction.

2) For C254

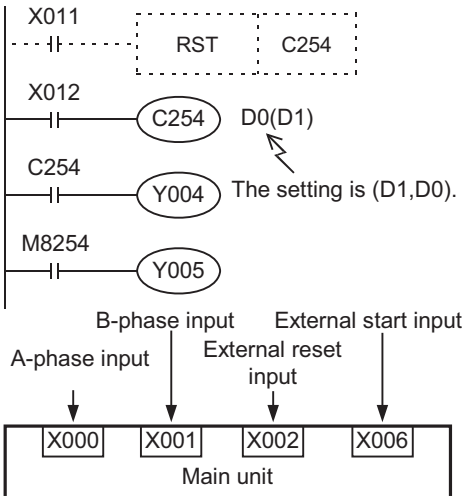

- C254 starts counting immediately when the input terminal X006 is turned on while X012 is on.
  The count input terminals are X000 (A-phase) and X001 (B-phase).
- C254 is reset by X011 on the sequence, and it is reset immediately when X002 is turned on.
- When the current value exceeds the setting (D1,D0), Y004 operates, and when the current value becomes lower than the setting, Y004 turns off.
- Y005 turns on (down-count) or off (up-count) according to the counting direction.

- A 2-phase encoder generates A-phase output and B-phase output between which there is a 90° phase difference. The high-speed counter automatically counts up or down according to the output as shown below.

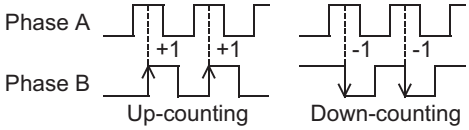

- The down-count/up-count operations of C251 to C255 can be monitored through the ON/OFF operations of M8251 to M8255.
  ON: Down-counting
  OFF: Up-counting

11.6 Timing of Updating of Current Value and Comparison of Current Value

11.6.1 Timing of updating of current value

When pulses are input to an input terminal for a high-speed counter, the high-speed counter executes up-counting or down-counting. The current values of devices are updated when counting is input.

11.6.2 Comparison of current value

To compare and output the current value of a high-speed counter, the following two methods are available.

1. **Use of comparison instruction (CMP), band comparison instruction (ZCP) or contact comparison instruction**
   Use the comparison instruction (CMP), band comparison instruction (ZCP) or contact comparison instruction if the comparison result is necessary at counting. Use these instructions only when high-speed processing is not required because these instructions are processed in the operation cycle of the PLC, and operation delay is generated before the comparison output result is obtained. Use the comparison instructions for high-speed counters (HSCS, HSCR and HSZ) described below if it is necessary to execute comparison and change the output contact (Y) at the same time when the current values of high-speed counters change.

2. **Use of Comparison instruction for high-speed counters (HSCS/HSCR/HSZ instruction)**
   Comparison instructions for high-speed counters (HSCS, HSCR and HSZ instructions) perform comparison and output the comparison results with the relevant high-speed counting operation. These instructions have limitations on the number of times of use as shown in the following table.
   When the output relay (Y) has been designated for comparison results, the ON/OFF status of the output is affected directly until the END instruction output is refreshed.
   When the PLC is a relay output type, a mechanical delay in operation (approx. 10ms) is caused.
   Therefore, it is best to use a transistor output type PLC.

Applied instruction	Limitation on number of times of use of instruction
HSCS*1	Up to 6 times
HSCR*1	
HSZ*1	

*1. The overall frequency changes when the HSCS, HSCR or HSZ instruction is used.
→ **For details on the overall frequency, refer to Section 11.7.**

11.7 Response Frequency and Overall Frequency

1. Response Frequency and Overall Frequency

When any of the following functions/instructions is used, the overall frequency is restricted without regard to the operand of the instruction.
Consider this restriction when examining the system or creating programs, and observe the specified overall frequency range.

- When two or more high speed counters are used.
- When the HSCS, HSCR, HSZ, PLSY, PLSR, DSZR, TBL, ZRN, PLSV, DRVI or DRVA instruction is used.
- When the pulse width/cycle measurement function is used.

Counter type		Response Frequency	Overall frequency determined by condition of used instruction	
			When HSCS, HSCR or HSZ instruction is not used	When HSCS, HSCR or HSZ instruction is used
1-phase 1-count input	C235, C236, C238, C239, C241	60kHz	200kHz - (Number of positioned axes*1 + Number of pulse width/cycle measurement inputs) x 40kHz	60kHz - (Number of positioned axes*1 x 5kHz) - (Number of pulse width/cycle measurement inputs x 20kHz)
	C237, C240, C242, C243, C244, C245	10kHz		
1-phase 2-count input	C246, C248(OP)	60kHz		
	C247, C248, C249, C250	10kHz		
2-phase 2-count input	C251, C253(OP)	30kHz		
	C252, C253, C254, C254(OP), C255	5kHz		

*1. Number of axes used in the following positioning instructions:
PLSY(FNC57), PLSR(FNC59), DSZR(FNC150), TBL(FNC152), ZRN(FNC156), PLSV(FNC157), DRVI(FNC158), DRVA(FNC159)

2. Calculation of overall frequency

Obtain the overall frequency using the following expression:

Overall frequency ≥ [(Sum of used frequency of 1-phase counters) + (Sum of used frequency of 2-phase counters)]

3. Example of calculation

Example1:
When HSCS, HSCR or HSZ instruction is not used, and instructions related to positioning (DRVI instruction [Y000] and DRVA instruction [Y001]) are used

Overall frequency : 200kHz - (2 axes x 40kHz) = 120kHz

<Counter No.>	<Contents of use>
C235(1-phase 1-count input):	50kHz is input.
C236(1-phase 1-count input):	50kHz is input.
C237(1-phase 1-count input):	10kHz is input.
C253(2-phase 2-count input):	5kHz is input.
Total	115kHz ≤ 120kHz (Overall frequency)

Example2:
When HSCS, HSCR or HSZ instruction is not used, and instructions related to positioning (DRVI instruction [Y000]) are used, Number of pulse width/cycle measurement inputs(X003)

Overall frequency : 200 kHz - [(1 axes + 1 input) x 40 kHz] = 120 kHz

<Counter No.>	<Contents of use>
C235(1-phase 1-counting):	50kHz is input.
C236(1-phase 1-counting):	50kHz is input.
Total	100kHz ≤ 120kHz (Overall frequency)

11.8 Related Devices and Function Switching Procedures

11.8.1 Related devices

1. For switching 1-phase 1-count input counter mode to up-count or down-count

Counter type	Counter No.	Specifying device	Up-counting	Down-counting
1-phase 1-count input	C235	M8235	OFF	ON
	C236	M8236		
	C237	M8237		
	C238	M8238		
	C239	M8239		
	C240	M8240		
	C241	M8241		
	C242	M8242		
	C243	M8243		
	C244	M8244		
	C245	M8245		

2. For monitoring of up-count/down-count counting direction of 1-phase 2-count input and 2-phase 2-count input counters

Counter type	Counter No.	Monitoring device	OFF	ON
1-phase 2-count input	C246	M8246	Up-counting	Down-counting
	C247	M8247		
	C248	M8248		
	C249	M8249		
	C250	M8250		
2-phase 2-count input	C251	M8251		
	C252	M8252		
	C253	M8253		
	C254	M8254		
	C255	M8255		

3. For switching high-speed counter function

Device No.	Name	Description	Reference
M8388	Contact for changing high-speed counter function	Changes the function of high-speed counter	-
M8392	Function switching devices	Switches the function of C248 and C253	Subsection 11.8.2
M8395	Function switching devices	Switches the function of C254	Subsection 11.8.2

11.8.2 [Function switching] switching of allocation and functions of input terminals

When the counters C248, C253 and C254 are combined with the following special auxiliary relays, the allocation of the input terminals and functions are changed.
Program the special auxiliary relays just before the counters.

Counter No.	Function switching method	Details of change
C248(OP)	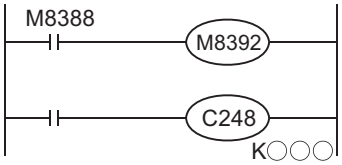	• Reset input is not given.
C253(OP)	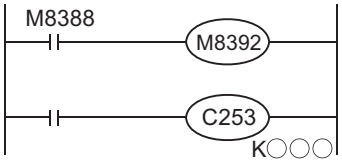	• Reset input is not given.
C254(OP)	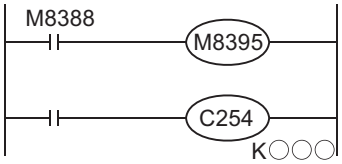	• The input count (2-phase 2-count) changes as follows Phase A : Changes from X000 to X006. Phase B : Changes from X001 to X007. • Reset input is not given. • Start input is not given.

12. Output Wiring Procedures

DESIGN PRECAUTIONS ⚠DANGER

- Make sure to have the following safety circuits outside of the PLC to ensure safe system operation even during external power supply problems or PLC failure.
  Otherwise, malfunctions may cause serious accidents.
  1) Most importantly, have the following: an emergency stop circuit, a protection circuit, an interlock circuit for opposite movements (such as normal vs. reverse rotation), and an interlock circuit (to prevent damage to the equipment at the upper and lower positioning limits).
  2) Note that when the PLC CPU detects an error, such as a watchdog timer error, during self-diagnosis, all outputs are turned off. Also, when an error that cannot be detected by the PLC CPU occurs in an input/output control block, output control may be disabled.
     External circuits and mechanisms should be designed to ensure safe machinery operation in such a case.
  3) Note that the output current of the 24V DC service power supply varies depending on the model and the absence/presence of extension blocks. If an overload occurs, the voltage automatically drops, inputs in the PLC are disabled, and all outputs are turned off.
     External circuits and mechanisms should be designed to ensure safe machinery operation in such a case.
  4) Note that when an error occurs in a relay, triac or transistor output device, the output could be held either on or off.
     For output signals that may lead to serious accidents, external circuits and mechanisms should be designed to ensure safe machinery operation in such a case.

DESIGN PRECAUTIONS ⚠CAUTION

- Do not bundle the control line together with or lay it close to the main circuit or power line. As a guideline, lay the control line at least 100mm (3.94") or more away from the main circuit or power line.
  Noise may cause malfunctions.
- Install module so that excessive force will not be applied to peripheral device connectors.
  Failure to do so may result in wire damage/breakage or PLC failure.

WIRING PRECAUTIONS ⚠DANGER

- Connect the AC power supply to the dedicated terminals specified in this manual.
  If an AC power supply is connected to a DC input/output terminal or DC power supply terminal, the PLC will burn out.
- Make sure to cut off all phases of the power supply externally before attempting installation or wiring work.
  Failure to do so may cause electric shock or damage to the product.
- Make sure to attach the terminal cover, offered as an accessory, before turning on the power or initiating operation after installation or wiring work.
  Failure to do so may cause electric shock.

WIRING PRECAUTIONS **⚠CAUTION**

- Do not supply power to the [24+] and [24V] terminals (24V DC service power supply) on the main unit or extension units.
  Doing so may cause damage to the product.
- Perform class D grounding (grounding resistance: 100 Ω or less) to the grounding terminal on the main unit and extension units with a wire 2 mm^2 or thicker.
  Do not use common grounding with heavy electrical systems (refer to Section 9.3).
- Do not wire vacant terminals externally.
  Doing so may damage the product.
- Connect the DC power supply to the dedicated terminals specified in this manual.
  If an AC power supply is connected to a DC input/output terminal or DC power supply terminal, the PLC will burn out.
- When drilling screw holes or wiring, make sure cutting or wire debris does not enter the ventilation slits.
  Failure to do so may cause fire, equipment failures or malfunctions.
- Make sure to properly wire the FX2N/FX3U Series extension equipment in accordance with the following precautions.
  Failure to do so may cause electric shock, a short-circuit, wire breakage, or damage to the product.
  - The disposal size of the cable end should follow the dimensions described in this manual.
  - Tightening torque should be between 0.5 and 0.8 N•m.
- Make sure to properly wire to the European terminal board in accordance with the following precautions.
  Failure to do so may cause electric shock, a short-circuit, wire breakage, or damage to the product.
  - The disposal size of the cable end should follow the dimensions described in this manual.
  - Tightening torque should be between 0.22 and 0.25 N•m.
  - Twist the end of strand wire and make sure that there are no loose wires.
  - Do not solder-plate the electric wire ends.
  - Do not connect more than the specified number of wires or electric wires of unspecified size.
  - Affix the electric wires so that neither the terminal block nor the connected parts are directly stressed.
- Make sure to properly wire to the FX Series terminal blocks in accordance with the following precautions.
  Failure to do so may cause electric shock, a short-circuit, wire breakage, or damage to the product.
  - The disposal size of the cable end should follow the dimensions described in this manual.
  - Tightening torque should be between 0.5 and 0.8 N•m.

12.1 External Wiring for Relay Output Type

This section explains relay outputs and external wiring.

- There are not relay output type of main units.
  Select from the input/output powered extension units/blocks.
- For the relay output specifications, refer to the following.

→ **For the specifications on the input/output powered extension unit, refer to Chapter 15.**
→ **For the specifications on the input/output extension block, refer to Chapter 16.**

12.1.1 Product life of relay contacts

→ **For product life of relay contacts, refer to Subsection 14.4.3.**

12.1.2 Handling of relay output

1. Output terminal

One common terminal is used for 4 or 8 relay output points.
The common terminal blocks can drive loads of different circuit voltage systems (for example,100V AC and 24V DC).

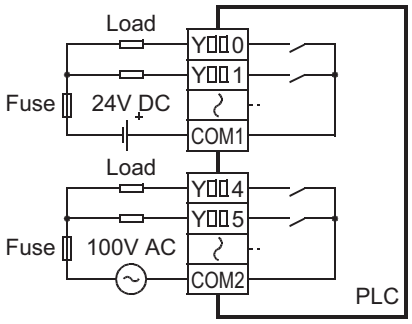

2. External power supply

Use an external power supply of 30V DC or less or 240V AC or less (250V AC or less when the unit does not comply with CE, UL or cUL standards) for loads.

3. Circuit insulation

The PLC internal circuit and external load circuits are electrically insulated between the output relay coil and contact. The common terminal blocks are separated from one another.

4. Display of operation

When power is applied to the output relay coil, the LED is lit, and the output contact is turned on.

5. Response time

The response time of the output relay from when the power is applied to the coil until the output contact is turned on and from when the coil is shut off until the output contact is turned off is approx. 10ms.

6. Output current

At a circuit voltage of 240V AC or less (250V AC or less when the unit does not comply with CE, UL or cUL standards), a resistance load of 2A per point or an inductive load of 80VA or less (100V AC or 200V AC) can be driven.

→ **For the life of the contact for switching an inductive load, refer to Subsection 14.4.3.**

When an inductive load is switched, connect a diode (for commutation) or a surge absorber in parallel with this load.

DC circuit	Diode (for commutation)
AC circuit	Surge absorber

7. Open circuit leakage current

Because there is no leakage current even while output contacts are OFF, the neon ball, etc. can be driven directly.

12.1.3 External wiring precautions

1. Protection circuit for load short-circuiting

A short-circuit at a load connected to an output terminal could cause burnout at the output element or the PCB. To prevent this, a protection fuse should be inserted at the output.

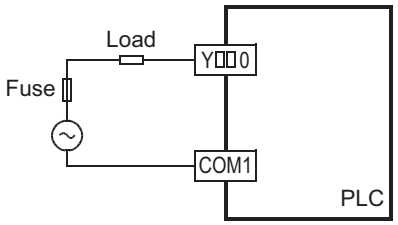

2. Contact protection circuit for inductive loads

An internal protection circuit for the relays is not provided for the relay output circuit in the extension blocks. It is recommended to use inductive loads with built-in protection circuits. When using loads without built-in protection circuits, insert an external contact protection circuit, etc. to reduce noise and extend the product life.

1) DC circuit

Connect a diode in parallel with the load.
The diode (for commutation) must comply with the following specifications.

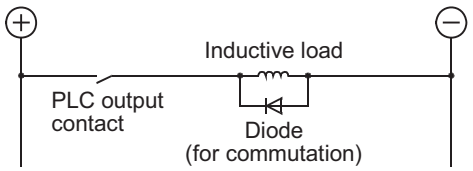

Item	Guide
Reverse voltage	5 to 10 times the load voltage
Forward current	Load current or more

2) AC circuit

Connect the surge absorber (combined CR components such as a surge killer and spark killer, etc.) parallel to the load.
Select the rated voltage of a surge absorber that is suitable for the load being used. Refer to the table below for other specifications.

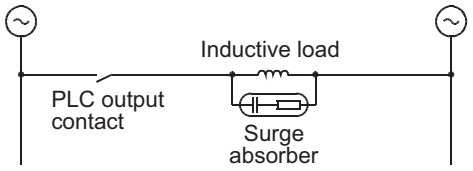

Item	Standard
Static electricity capacity	Approx. 0.1μF
Resistance value	Approx. 100 to 200Ω

Reference

Manufacturer	Model name
Okaya Electric Industries Co., Ltd.	CR-10201

Manufacturer	Model name
Rubycon Corporation	250MCRA104100M B0325

3. Interlock

For loads such as forward/reverse contactors, etc., where a hazardous condition could result if switched ON simultaneously, an external interlock should be provided for interlocking the PLC's internal programs as shown to the right.

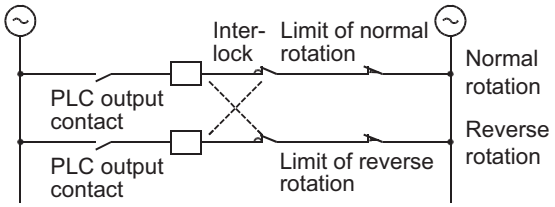

4. In-phase

PLC output contacts (*) should be used in an "in-phase" manner.

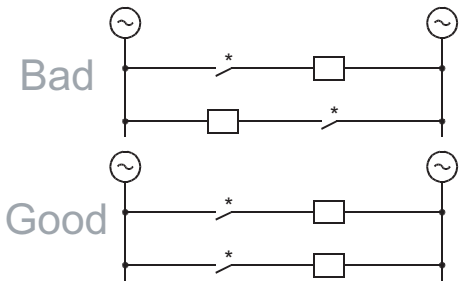

12.1.4 Example of external wiring

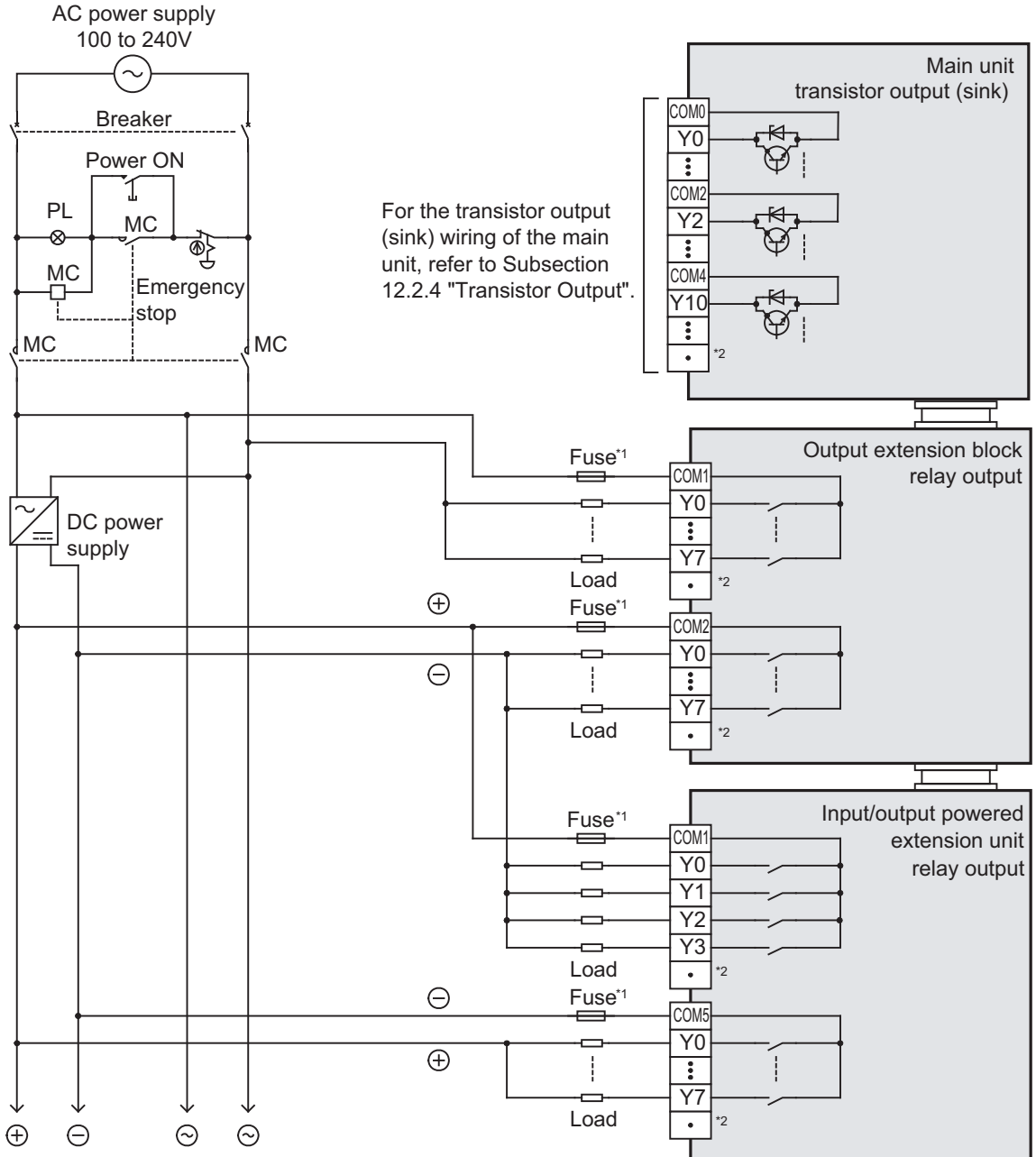

*1. The output circuit of this PLC does not have a built-in fuse.
Provide a fuse suitable to each load to prevent blowout of the wires on the circuit board caused by output element fracture due to load short-circuiting.
*2. " ・ " represents vacant terminals.

WIRING PRECAUTIONS **⚠CAUTION**

- Do not wire the vacant terminals externally.
  Doing so may damage the product.

12.2 External Wiring of Transistor Output (Sink/Source) Type

This section explains the procedures for handling transistor output and external wiring.

- There are not transistor output source type of main units.
  Select from the input/output powered extension units/blocks.
- For the transistor output specifications, refer to the following.

→ **For the specifications on the main unit, refer to Subsection 4.4.1.**
→ **For the specifications on the input/output powered extension unit, refer to Chapter 15.**
→ **For the specifications on the input/output extension block, refer to Chapter 16.**

12.2.1 Transistor Output Sink and Source

FX2N Series input/output extension units/blocks of transistor sink output type and of transistor source output type are available. FX3G Series main units provide only sink outputs.

1. Differences in circuit

- Sink output [-common]
  Output to make load current flow into the output (Y) terminal is called sink output.

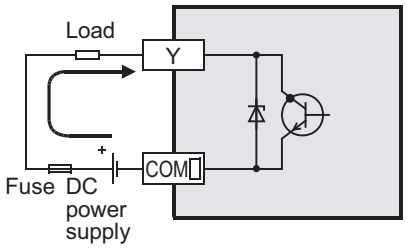

- Source output [+common]
  Output to make load current flow out of the output (Y) terminal is called source output.

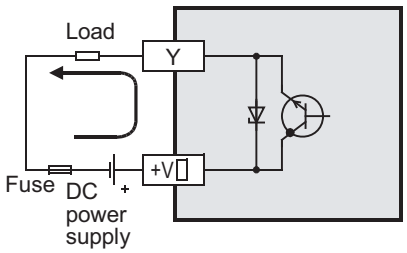

12.2.2 Handling of transistor output

1. Output terminals

One, 4 or 8 transistor output points are covered by one common terminal.

Sink output

Load current flows into the output (Y) terminals.
Connect each COM☐ (number) terminal to the minus side of the load power supply.
The COM☐ terminals are not connected internally.

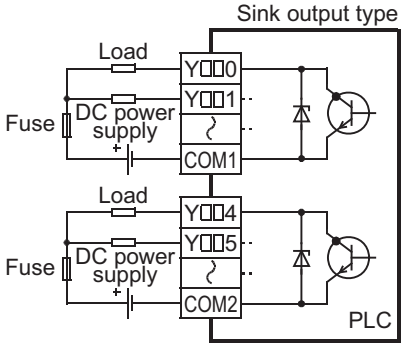

Source output

Load current flows out of the output (Y) terminals.
Connect each +V☐ (number) terminal to the plus side of the load power supply.
The +V☐ terminals are not connected internally.

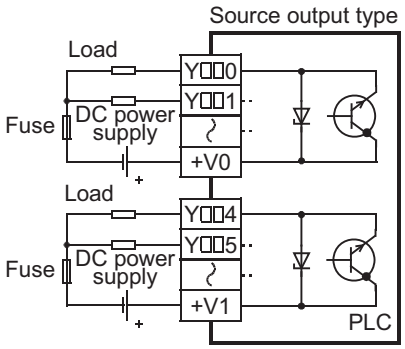

2. External power supply

For driving the load, use a smoothing power supply of 5 to 30V DC that can output current two or more times the rated current of the fuse connected to the load circuit.

3. Insulation of circuit

The internal circuit of the PLC and the output transistor are insulated with a photocoupler.
The common blocks are separated from one another.

4. Display of operation

Operation indicator LEDs are built into the main unit and output extension blocks, and turn ON when photocouplers are actuated.

5. Response time

The time from when the PLC drives (or shuts down) the photocoupler until the transistor is turned on (or off) is shown in the following table.

Classification		Response time	Load current	
Main unit 14/24 point type	Y000, Y001	5μs or less	5 to 24V DC 10mA or more	When using an instruction related to pulse train output or positioning, make sure to set the load current to 10 to 100mA (5 to 24V DC).
	Y002 or more	0.2ms or less	24V DC 200 mA or more *1	
Main unit 40/60 point type	Y000 to Y002	5μs or less	5 to 24V DC 10mA or more	When using an instruction related to pulse train output or positioning, make sure to set the load current to 10 to 100mA (5 to 24V DC).
	Y003 or more	0.2ms or less	24V DC 200mA or more *1	
Input/output powered extension unit Output extension block		0.2ms or less	24V DC 200mA *1	

*1. The transistor OFF time is longer under lighter loads. For example, under a load of 24V DC 40mA, the response time is approx. 0.3ms. When response performance is required under light loads, provide a dummy resistor as shown below to increase the load current.

- **Sink output type**

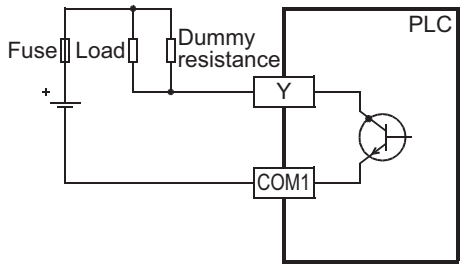

- **Source output type**

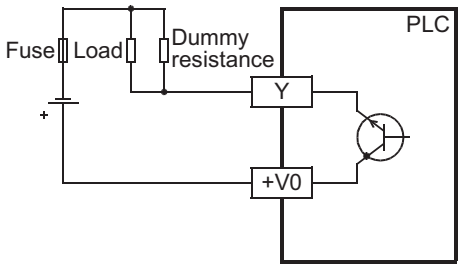

6. Output current

The maximum resistance loads for the input/output powered extension units and output extension blocks are shown in the following table.
The ON voltage of the output transistor is approx. 1.5V.
When driving a semiconductor element, carefully check the input voltage characteristics of the applied element.

Model		Output current	Limitation
Main units	FX3G-14MT/ES	0.5A/point	The total load current of resistance loads per common terminal should be the following value. 1 point/common: 0.5A or less 4 points/common: 0.8A or less 8 points/common: 1.6A or less For FX2N-16EYT-C: 16 points/common: 1.6A or less For FX2N-8EYT-H: 4 points/common: 2A or less
	FX3G-24MT/ES		
	FX3G-40MT/ES		
	FX3G-60MT/ES		
Input/output powered extension units	FX2N-32ET-ESS/UL		
	FX2N-48ET-ESS/UL		
	FX2N-32ET		
	FX2N-48ET		
Output extension block	FX2N-16EYT-ESS/UL		
	FX2N-8EYT-ESS/UL		
	FX2N-16EYT		
	FX2N-8EYT		
	FX2N-8EYT-H	1A/point	
	FX2N-16EYT-C	0.3A/point	

7. Open circuit leakage current

0.1mA or less

12.2.3 External wiring precautions

1. Protection circuit for load short-circuits

A short-circuit at a load connected to an output terminal could cause burnout at the output element or the PCB. To prevent this, a protection fuse should be inserted at the output.
Use a load power supply capacity that is at least 2 times larger than the total rated fuse capacity.

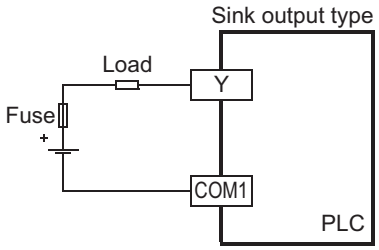

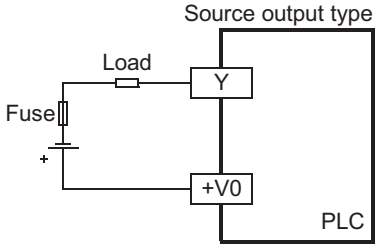

2. Contact protection circuit for inductive loads

When an inductive load is connected, connect a diode (for commutation) in parallel with the load as necessary.
The diode (for commutation) must comply with the following specifications.

Item	Guide
Reverse voltage	5 to 10 times of the load voltage
Forward current	Load current or more

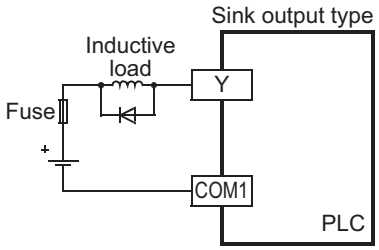

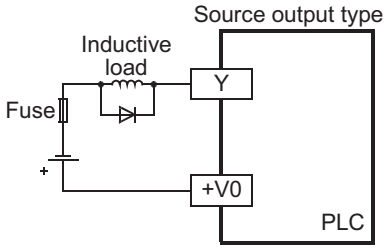

3. Interlock

For loads such as forward/reverse contactors, etc., where a hazardous condition could result if switched ON simultaneously, an external interlock should be provided for interlocking the PLC's internal programs, as shown to the right.

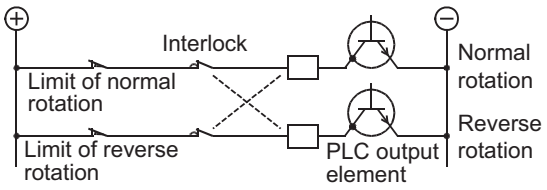

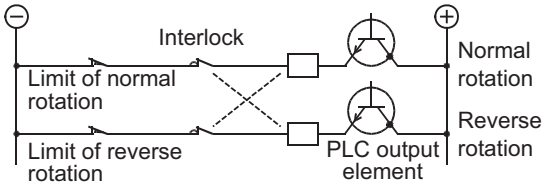

12.2.4 Example of external wiring

1. Transistor output (Sink)

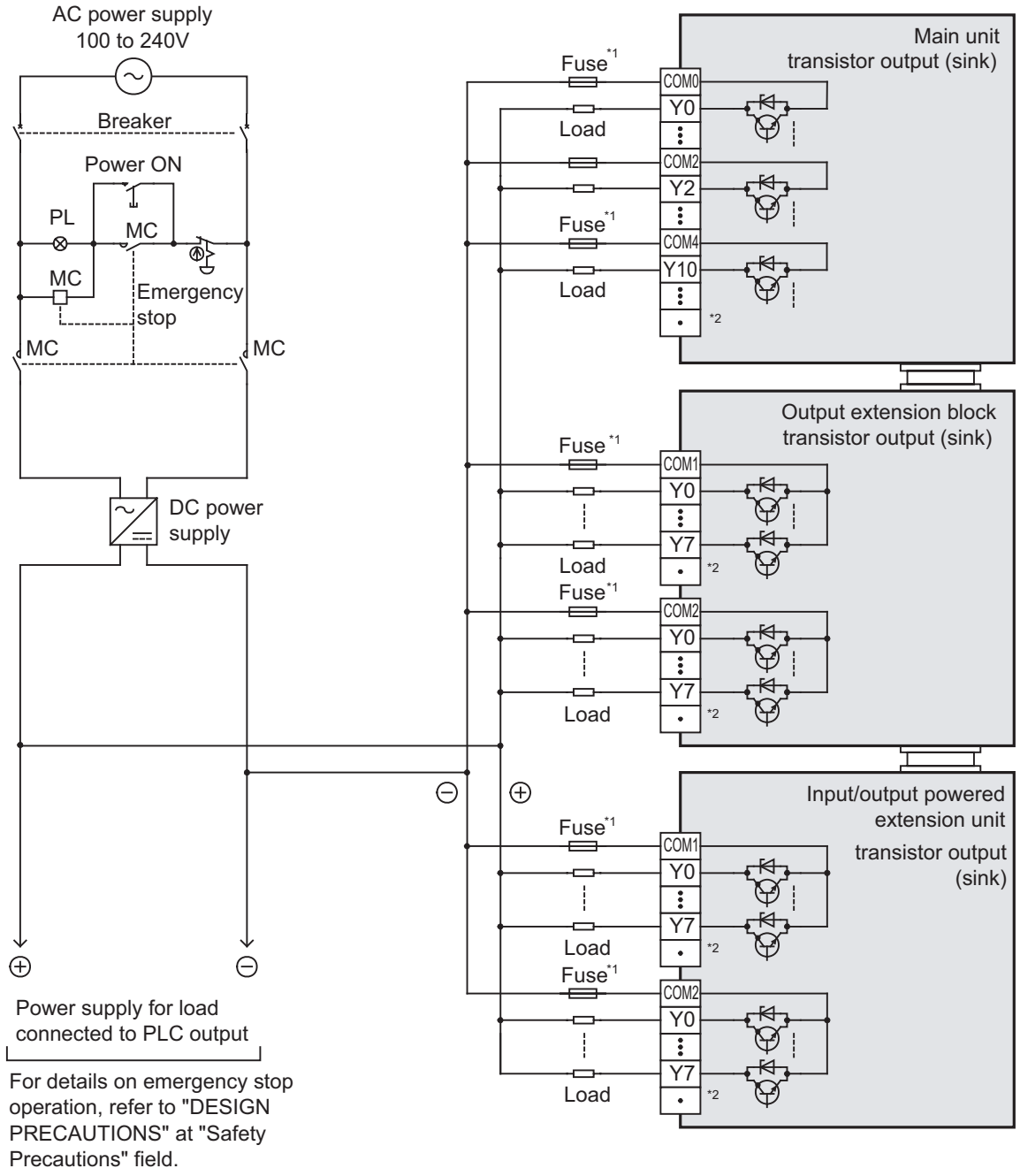

*1. The output circuit of this PLC does not have a built-in fuse.
Provide a fuse suitable to each load to prevent blowout of the wires on the circuit board caused by output element fracture due to load short-circuiting.

*2. "・" represents vacant terminals.

WIRING PRECAUTIONS **⚠CAUTION**

- Do not wire the vacant terminals externally.
Doing so may damage the product.

12.3 External Wiring for Triac (SSR) Output Type

This section explains the procedures for handling triac output and external wiring.

- There are not triac output type of main units.
  Select from the input/output powered extension units/blocks.
- For the triac output specifications, refer to the following.

→ **For the specifications on the input/output powered extension unit, refer to Chapter 15.**
→ **For the specifications on the input/output extension block, refer to Chapter 16.**

12.3.1 Handling of triac output

1. Output terminals

On the triac output type units/blocks, one common terminal is used for 8 points.
Therefore, the common terminal blocks can drive loads of different circuit voltage systems (for example, 100V AC and 200V AC).

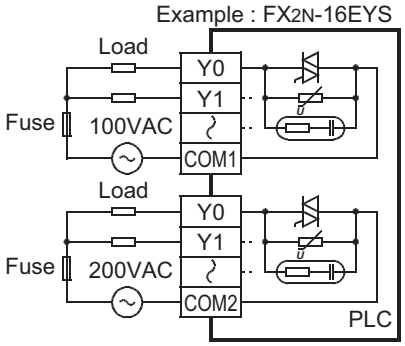

2. Circuit insulation

The PLC internal circuit and the output element (triac) are insulated with a photo-thyristor.
The common terminal blocks are separate from one another.

3. Display of operation

When the photo-thyristor is driven, the LED is lit, and the output triac is turned on.

4. Response time

The time from when the photo-thyristor is driven or shut down until the output triac is turned on and until it is turned off is 1ms or less and 10ms or less, respectively.

5. Output current

The max current per output point is 0.3A. However, to restrict temperature rise, the max current per one output from four points should be 0.8A (average per point is 0.2A).
When a load with high rush current is turned on and off frequently, the root-mean-square current should be 0.2A or less.

<Example>

$$\sqrt{\frac{4^2 \times 0.02 + 0.4^2 \times 0.7}{0.02 + 0.7 + 10}} = 0.2A$$

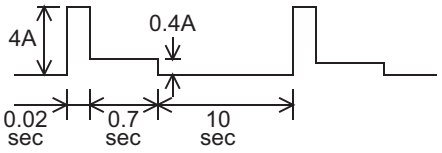

6. Open circuit leakage current

A C-R absorber is connected for turn-off in parallel with the triac output terminal of this type of PLC.
Therefore, when the circuit opens, a leakage current will be 1mA at 100V AC and 2mA at 200V AC.

Since the triac output type devices leak current when the circuits are open, small-size relays and micro current loads having low rated operating current may keep operating even when the triac output is turned off. Therefore, use a load of 0.4VA or more at 100V AC or 1.6VA or more at 200V AC. If the load is less than this value, connect a surge absorber as stated below in parallel with the load.

→ **For the connection of the surge absorber, refer to 12.3.2 External wiring precautions.**

12.3.2 External wiring precautions

1. Protection circuit for load short-circuits

A short-circuit at a load connected to an output terminal could cause burnout at the output element or the PCB. To prevent this, a protection fuse should be inserted at the output.

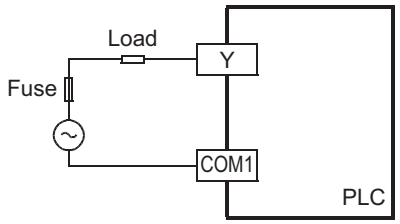

2. Micro current load

The PLC's internal Triac output circuit is equipped with a turn-off C-R absorber. When connecting a very low current load of "0.4VA/100V AC or less, or 1.6VA/200V AC or less", please connect a surge absorber parallel to the load.
Select the rated voltage of a surge absorber that is suitable for the load being used. Refer to the table below for other specifications.

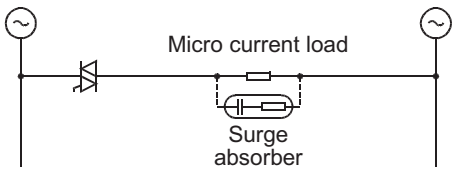

Item	Guide
Static electricity capacity	Approx. 0.1μF
Resistance value	Approx. 100 to 200Ω

Reference

Manufacturer	Model name
Okaya Electric Industries Co., Ltd.	CR-10201

Manufacturer	Model name
Rubycon Corporation	250MCRA104100M B0325

3. Interlock

For loads such as forward/reverse contactors, etc., where a hazardous condition could result if switched ON simultaneously, an external interlock should be provided for interlocking the PLC's internal programs as shown to the right.

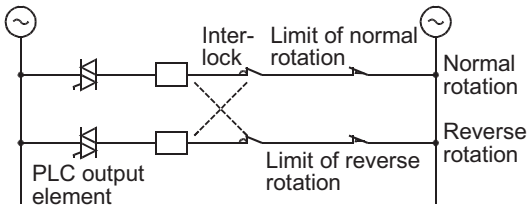

4. In-phase

PLC output contacts (*) should be used in an "in-phase" manner.

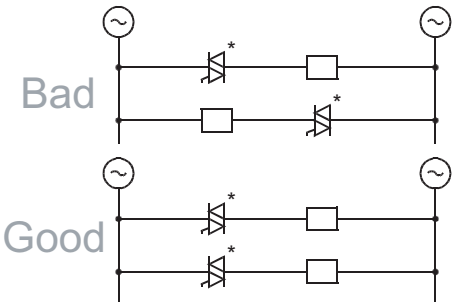

12.3.3 Example of external wiring

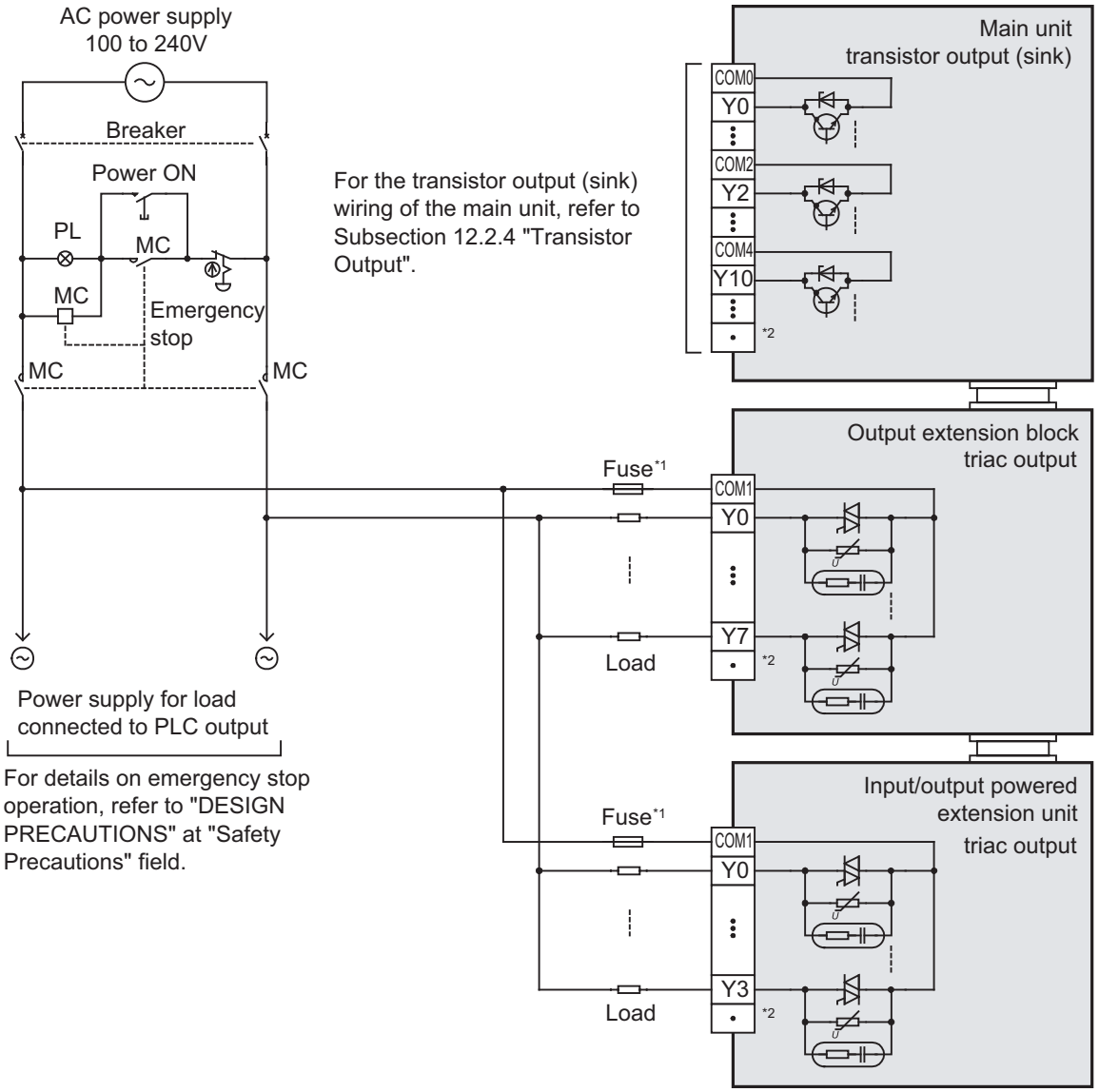

*1. The output circuit of this PLC does not have a built-in fuse.
Provide a fuse suitable to each load to prevent blowout of the wires on the circuit board caused by output element fracture due to load short-circuiting.

*2. "•" represents vacant terminals.

WIRING PRECAUTIONS ⚠**CAUTION**

- Do not wire the vacant terminals externally.
Doing so may damage the product.

13. Examples of Wiring for Various Uses

DESIGN PRECAUTIONS ⚠ **DANGER**

- Make sure to have the following safety circuits outside of the PLC to ensure safe system operation even during external power supply problems or PLC failure.
  Otherwise, malfunctions may cause serious accidents.
  1) Most importantly, have the following: an emergency stop circuit, a protection circuit, an interlock circuit for opposite movements (such as normal vs. reverse rotation), and an interlock circuit (to prevent damage to the equipment at the upper and lower positioning limits).
  2) Note that when the PLC CPU detects an error, such as a watchdog timer error, during self-diagnosis, all outputs are turned off. Also, when an error that cannot be detected by the PLC CPU occurs in an input/output control block, output control may be disabled.
  External circuits and mechanisms should be designed to ensure safe machinery operation in such a case.
  3) Note that when the PLC CPU detects an error, such as a watchdog timer error, during self-diagnosis, all outputs are turned off. Also, when an error that cannot be detected by the PLC CPU occurs in an input/output control block, output control may be disabled.
  External circuits and mechanisms should be designed to ensure safe machinery operation in such a case.
  4) Note that when an error occurs in a relay, triac or transistor output device, the output could be held either on or off.
  For output signals that may lead to serious accidents, external circuits and mechanisms should be designed to ensure safe machinery operation in such a case.

DESIGN PRECAUTIONS ⚠ **CAUTION**

- Do not bundle the control line together with or lay it close to the main circuit or power line. As a guideline, lay the control line at least 100mm (3.94") or more away from the main circuit or power line.
  Noise may cause malfunctions.
- Install module so that excessive force will not be applied to peripheral device connectors.
  Failure to do so may result in wire damage/breakage or PLC failure.

WIRING PRECAUTIONS ⚠ **DANGER**

- Connect the AC power supply to the dedicated terminals specified in this manual.
  If an AC power supply is connected to a DC input/output terminal or DC power supply terminal, the PLC will burn out.
- Make sure to cut off all phases of the power supply externally before attempting installation or wiring work.
  Failure to do so may cause electric shock or damage to the product.
- Make sure to attach the terminal cover, offered as an accessory, before turning on the power or initiating operation after installation or wiring work.
  Failure to do so may cause electric shock.

WIRING PRECAUTIONS **⚠CAUTION**

- Do not supply power to the [24+] and [24V] terminals (24V DC service power supply) on the main unit or extension units.
  Doing so may cause damage to the product.
- Perform class D grounding (grounding resistance: 100 Ω or less) to the grounding terminal on the main unit and extension units with a wire 2 mm^2 or thicker.
  Do not use common grounding with heavy electrical systems (refer to Section 9.3).
- Do not wire vacant terminals externally.
  Doing so may damage the product.
- Connect the DC power supply to the dedicated terminals specified in this manual.
  If an AC power supply is connected to a DC input/output terminal or DC power supply terminal, the PLC will burn out.
- When drilling screw holes or wiring, make sure cutting or wire debris does not enter the ventilation slits.
  Failure to do so may cause fire, equipment failures or malfunctions.
- Make sure to properly wire the FX2N/FX3U Series extension equipment in accordance with the following precautions.
  Failure to do so may cause electric shock, a short-circuit, wire breakage, or damage to the product.
  - The disposal size of the cable end should follow the dimensions described in this manual.
  - Tightening torque should be between 0.5 and 0.8 N•m.
- Make sure to properly wire to the European terminal board in accordance with the following precautions.
  Failure to do so may cause electric shock, a short-circuit, wire breakage, or damage to the product.
  - The disposal size of the cable end should follow the dimensions described in this manual.
  - Tightening torque should be between 0.22 and 0.25 N•m.
  - Twist the end of strand wire and make sure that there are no loose wires.
  - Do not solder-plate the electric wire ends.
  - Do not connect more than the specified number of wires or electric wires of unspecified size.
  - Affix the electric wires so that neither the terminal block nor the connected parts are directly stressed.
- Make sure to properly wire to the FX Series terminal blocks in accordance with the following precautions.
  Failure to do so may cause electric shock, a short-circuit, wire breakage, or damage to the product.
  - The disposal size of the cable end should follow the dimensions described in this manual.
  - Tightening torque should be between 0.5 and 0.8 N•m.

13.1 Notes about Examples of Wiring

The examples of wiring are given under the following conditions.

→ **For the example of positioning wiring, refer to the Positioning Control Edition.**

- The input/output numbers are the actual numbers on the program. (They may differ from the numbers shown on the product terminals.)
- Product input/output specifications
  Check the product input/output specifications when using any example of wiring.
  - Products only for sink input and products both for sink input and for source input are available.
- The examples of programming (applied instructions) are given based on the allocation of the input/output numbers for wiring.

→ **For the applied instructions, refer to the Programming Manual.**

13.2 Digital Switch [DSW Instructions (FNC72)/BIN Instructions (FNC19)]

13.2.1 When DSW instructions are used

Examples of wiring for capturing values from a 4-digit digital switch to the data register D100 are given below.

1. Main unit

Example of program

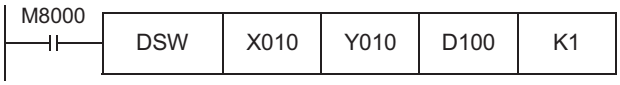

Example of wiring

1) In the case of sink wiring
When inputs are used for both sink and source and outputs are the transistor sink type in the used main unit

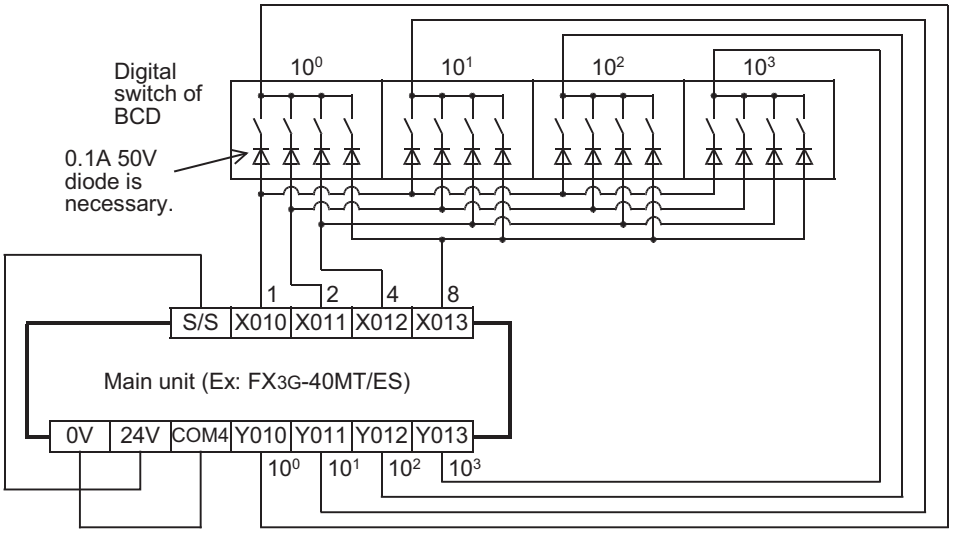

2. Main unit + input/output powered extension unit/block

Example of program

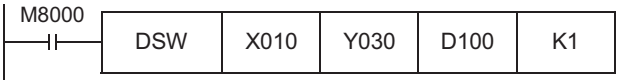

Example of wiring

1) In the case of sink wiring
When the main unit and a transistor output (sink) type input/output powered extension unit/block are used

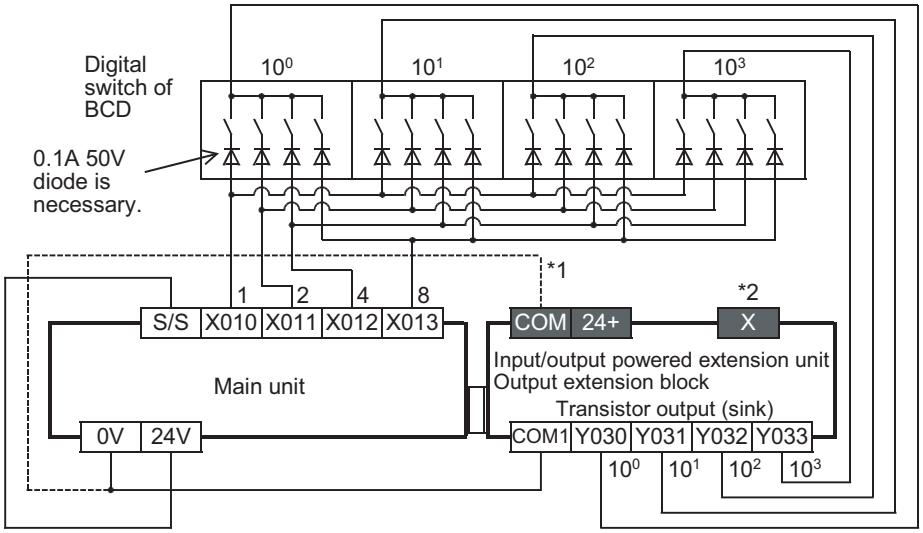

*1 To use the input terminal (X) of the input/output powered extension unit, wire the terminal as shown by the dotted line.
*2 The terminals in the shaded areas are provided on input/output powered extension units (ex.: FX2N-32ET).
Output extension blocks do not have the terminals.

3. Input/output powered extension unit

Example of program

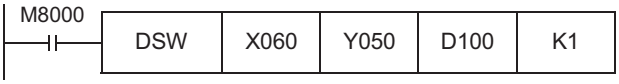

Example of wiring

1) In the case of sink wiring
When inputs are used for sink only and outputs are the transistor sink type in the used input/output powered extension unit

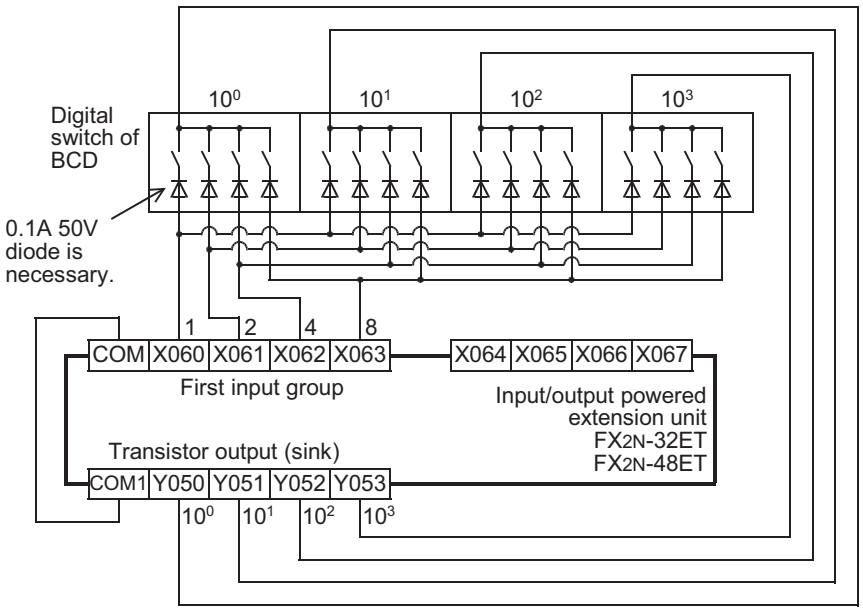

13.2.2 When BIN instructions are used

Examples of wiring for capturing values from a 2-digit digital switch to the data register D102 are given below.

Example of program

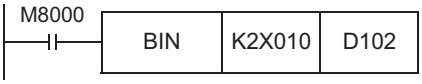

Example of wiring

1) In the case of sink wiring
When inputs are used for both sink and source in the used main unit or input/output powered extension unit

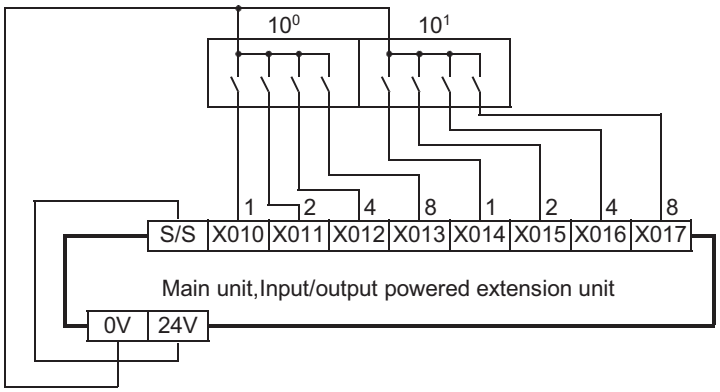

2) In the case of sink wiring
When inputs are used for sink only in the used input/output powered extension unit

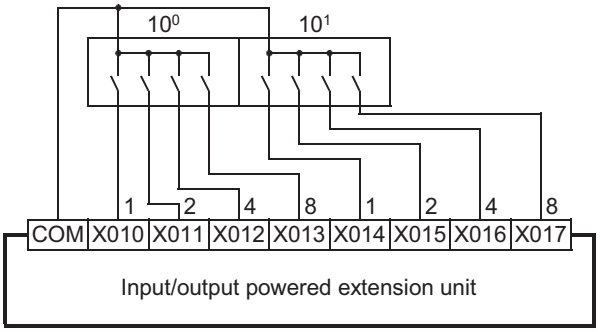

3) In the case of source wiring
When inputs are used for both sink and source in the used main unit or input/output powered extension unit

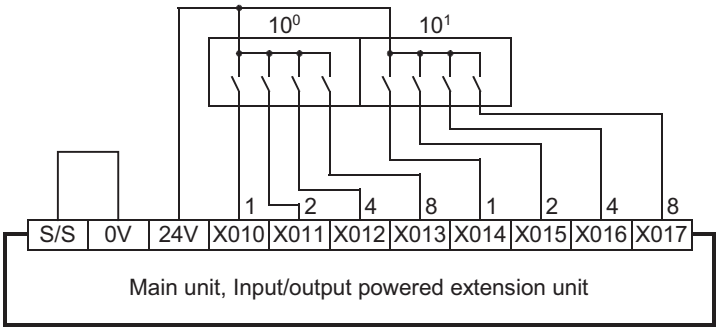

13.3 Input Matrix [MTR Instructions (FNC 52)]

This section gives examples of wiring for capturing the ON/OFF status of 24 switches to M30 to M37, M40 to M47 and M50 to M57 using MTR instructions.

1. Main unit

Example of program

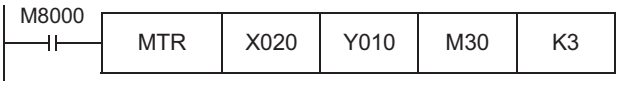

Example of wiring

1) In the case of sink wiring
When inputs are used for both sink and source and outputs are the transistor sink type in the used main unit

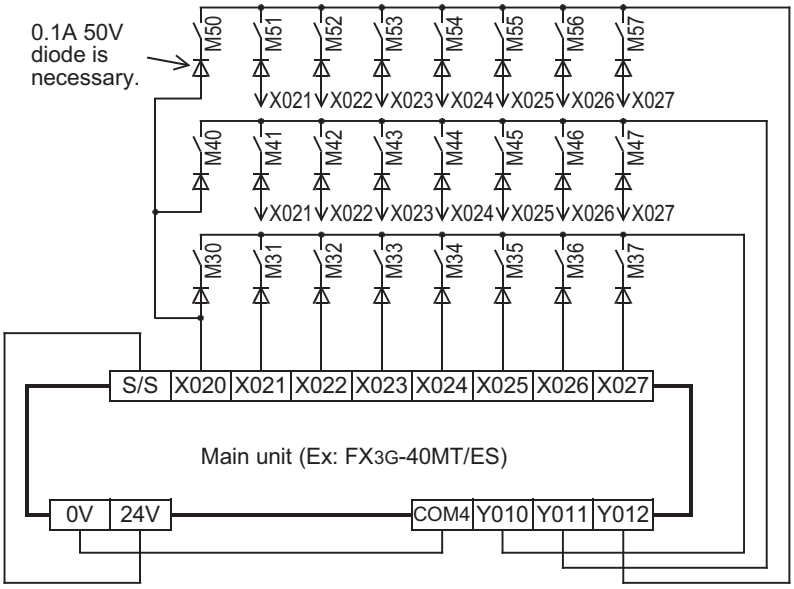

2. Main unit + input/output powered extension unit/block

Example of program

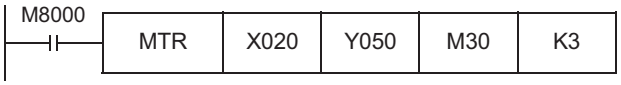

Example of wiring

1) In the case of sink wiring
When the main unit and a transistor output (sink) type input/output powered extension unit/block are used

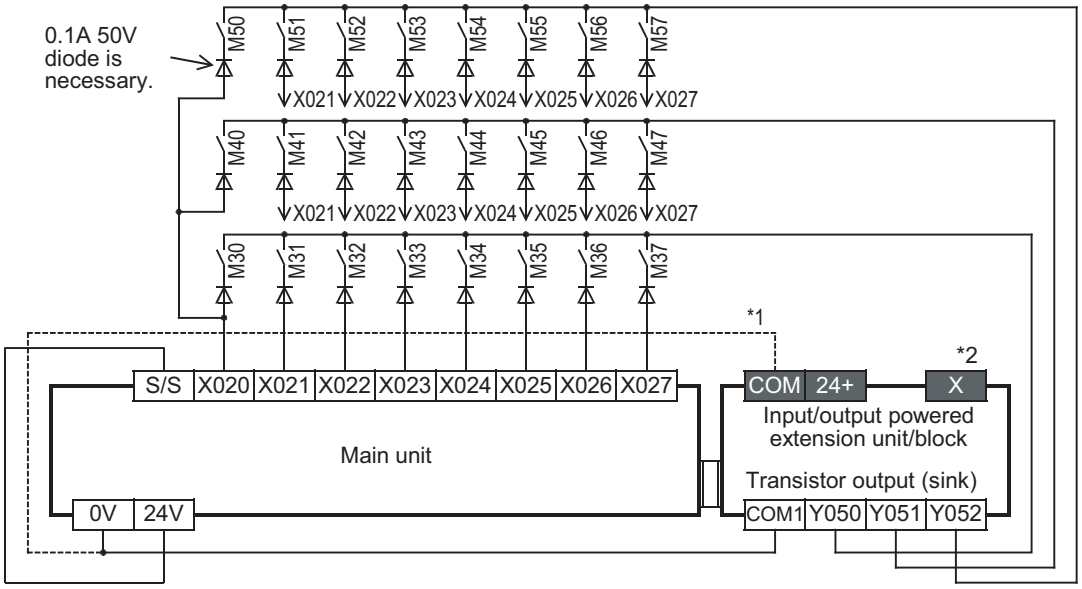

*1 To use the input terminal (X) of the input/output powered extension unit, wire the terminal as shown by the dotted line.
*2 The terminals in the shaded areas are provided on input/output powered extension units (ex.: FX2N-32ET).
Output extension blocks do not have the terminals.

3. Input/output powered extension unit

Example of program

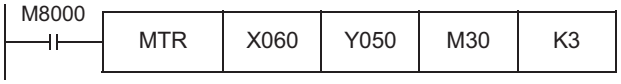

Example of wiring

1) In the case of sink wiring
When inputs are used for sink only and outputs are the transistor sink type in the used input/output powered extension unit

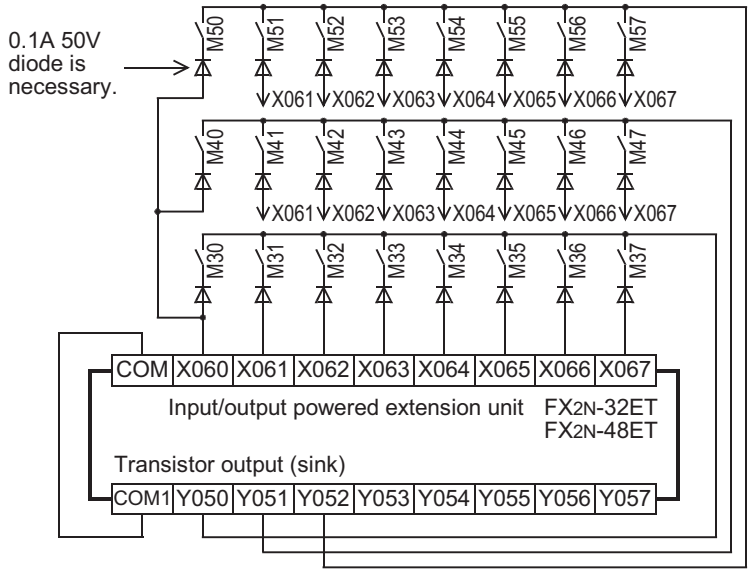

13.4 Seven Segment with Latch [SEGL Instructions (FNC74)/BCD Instructions (FNC18)]

13.4.1 When SEGL instructions are used

This subsection gives examples of wiring for displaying the current value of D100 on the 4-digit 7-segment display.

1. Main unit

Example of program

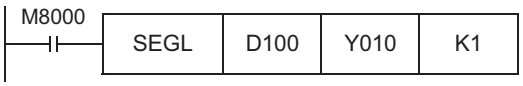

Example of wiring

1) In the case of sink wiring
When inputs are used for both sink and source and outputs are the transistor sink type in the used main unit

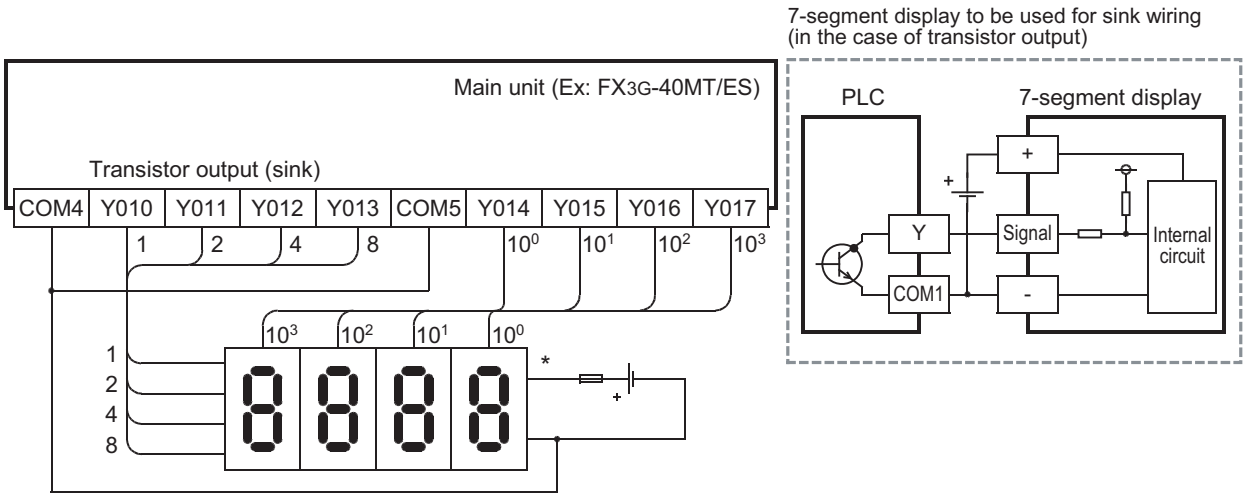

* Use a 7-segment display with a latch and a built-in BCD decoder.

2. Input/output powered extension unit

Example of program

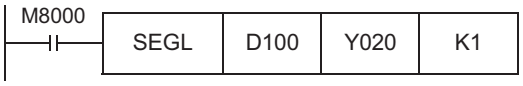

Example of wiring

1) In the case of sink wiring
When inputs are used for sink only and outputs are the transistor sink type in the used input/output powered extension unit

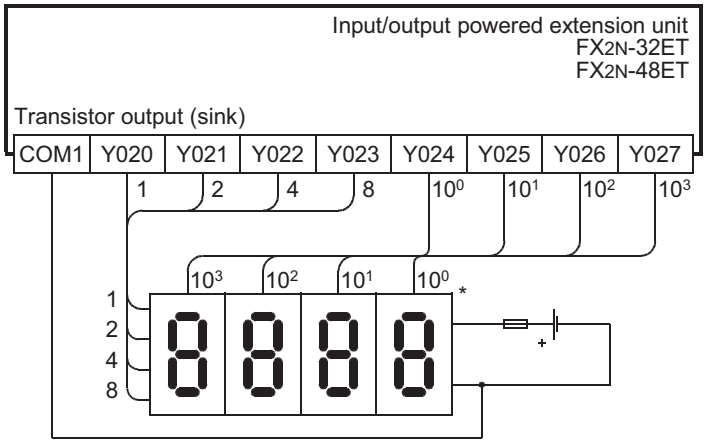

7-segment display to be used for sink wiring
(in the case of transistor output)

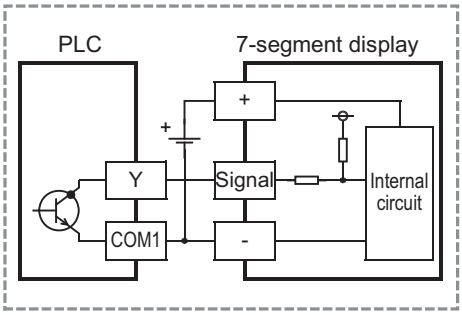

* Use a 7-segment display with a latch and a built-in BCD decoder.

13.4.2 When BCD instructions are used

This subsection gives examples of wiring for displaying the current value of D100 on the 2-digit 7-segment display.

1. Main unit

Example of program

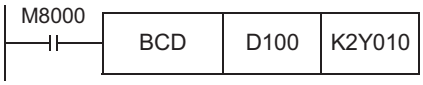

Example of wiring

1) In the case of sink wiring
When inputs are used for both sink and source and outputs are the transistor sink type in the used main unit

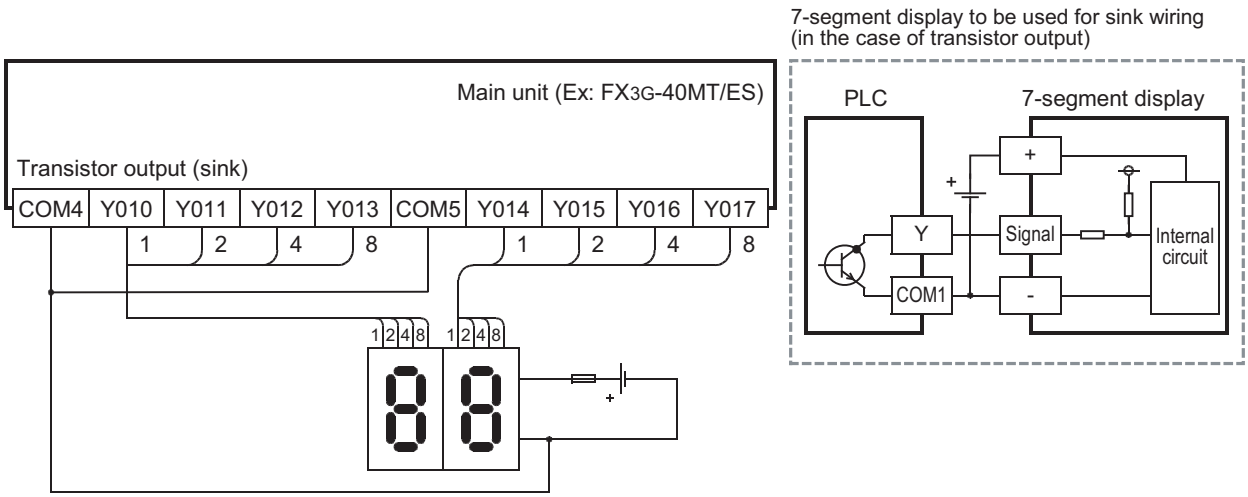

2. Input/output powered extension unit

Example of program

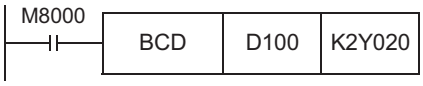

Example of wiring

1) In the case of sink wiring
When inputs are used for sink only and outputs are the transistor sink type in the used input/output powered extension unit

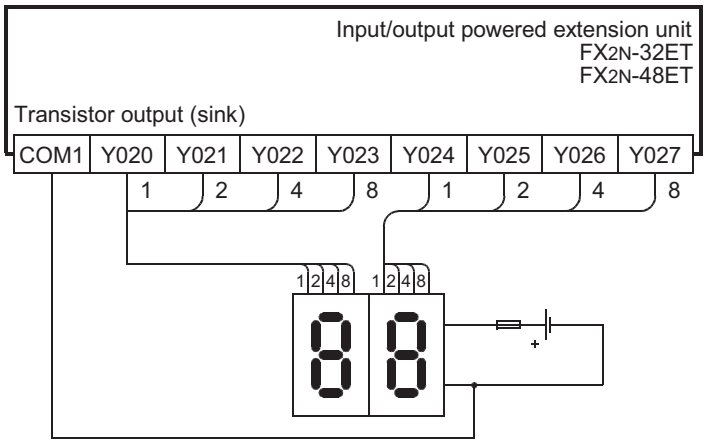

7-segment display to be used for sink wiring
(in the case of transistor output)

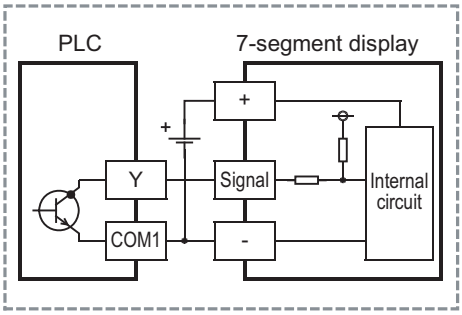

14. Test Operation, Adjustment, Maintenance and Troubleshooting

STARTUP AND MAINTENANCE PRECAUTIONS ⚠ **DANGER**

- Do not touch any terminal while the PLC's power is on.
  Doing so may cause electric shock or malfunctions.
- Before cleaning or retightening terminals, cut off all phases of the power supply externally.
  Failure to do so may cause electric shock.
- Make sure to connect the battery for memory backup correctly.
  Do not charge, disassemble, heat, short-circuit, or expose the battery to fire.
  Doing so may rupture or ignite it.
- Before modifying or disrupting the program in operation or running the PLC, carefully read through this manual and the associated manuals and ensure the safety of the operation.
  An operation error may damage the machinery or cause accidents.
- Do not change the program in the PLC from two or more peripheral equipment devices at the same time. (i.e. from a programming tool and a GOT)
  Doing so may cause destruction or malfunction of the PLC program.

STARTUP AND MAINTENANCE PRECAUTIONS ⚠ **CAUTION**

- Turn off the power to the PLC before attaching or detaching the memory cassette. If the memory cassette is attached or detached while the PLC's power is on, the data in the memory may be destroyed, or the memory cassette may be damaged.
- Do not disassemble or modify the PLC.
  Doing so may cause fire, equipment failures, or malfunctions.
  For repair, contact your local Mitsubishi Electric distributor.
- Turn off the power to the PLC before connecting or disconnecting any extension cable.
  Failure to do so may cause equipment failures or malfunctions.
- Turn off the power to the PLC before attaching or detaching the following devices.
  Failure to do so may cause equipment failures or malfunctions.
  - Peripheral devices, expansion boards, and special adapters
  - Extension units/blocks and FX Series terminal blocks
  - Battery and memory cassette

DISPOSAL PRECAUTIONS ⚠ **CAUTION**

- Please contact a certified electronic waste disposal company for the environmentally safe recycling and disposal of your device.

TRANSPORTATION PRECAUTIONS ⚠ **CAUTION**

- When transporting the FX3G Series PLC incorporating the optional battery, turn on the PLC before shipment, confirm that the battery mode is set using a parameter and the ALM LED is OFF, and check the battery life.
  If the PLC is transported with the ALM LED on or the battery exhausted, the battery-backed data may be unstable during transportation.
- The PLC is a precision instrument. During transportation, avoid impacts larger than those specified in the general specifications (Section 4.1). Failure to do so may cause failures in the PLC.
  After transportation, verify the operations of the PLC.

14.1 Preparation for Test Operation

14.1.1 Preliminary inspection [power OFF]

Incorrect connection of the power supply terminal, contact of the DC input wire and power supply wire, or short-circuiting of output wires may result in serious damage.
Before applying power, check that the power supply and ground terminals are connected correctly and input/output devices are wired properly.

Notes
The dielectric withstand voltage and insulation resistance test of the PLC should be measured in accordance with the following procedures. 1) Remove all input/output wires and power supply wires from the PLC. 2) Connect a crossing wire to each of the PLC terminals (power supply terminal, input terminals and output terminals) except the ground terminal. For the dielectric withstand voltage test of each terminal, refer to the generic specifications for the product.(refer to Section 4.1) 3) Measure the dielectric withstand voltage and insulation resistance between each terminal and the ground terminal. Dielectric withstand voltage: 1.5kV AC or 500V for 1min (The terminals vary in dielectric withstand voltage.) Insulation resistance: 500V DC/5MΩ or more

14.1.2 Connection to built-in programming connector (RS-422)

1. When connecting a peripheral device

Connect and disconnect the communication cable for the peripheral device.
At connection, align the "positioning mark" between the cable and the main unit.

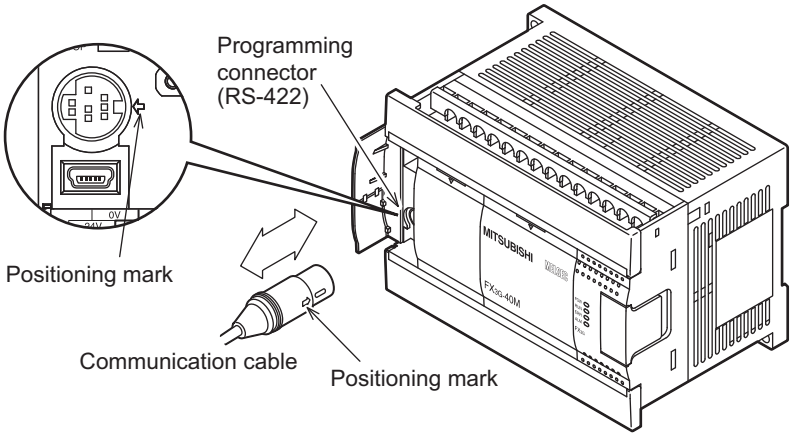

2. For continuous use of a peripheral device (such as GOT)

Cut off the area shown in the left figure below of the peripheral device connector cover (main unit) using a nipper, etc., and connect the peripheral device as shown in the right figure below.

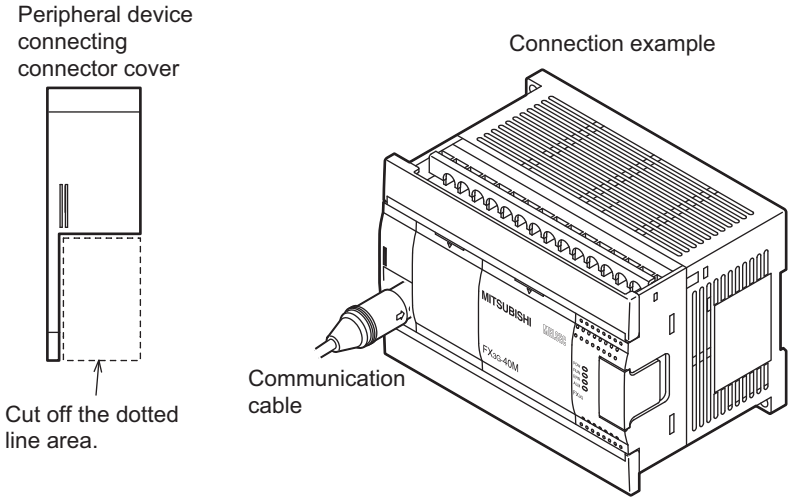

3. For continuous use of a peripheral device (such as GOT) (using the connector conversion adapter)

Cut off the area shown in the left figure below of the connector conversion adapter using a nipper, etc., and connect the peripheral device as shown in the right figure below.

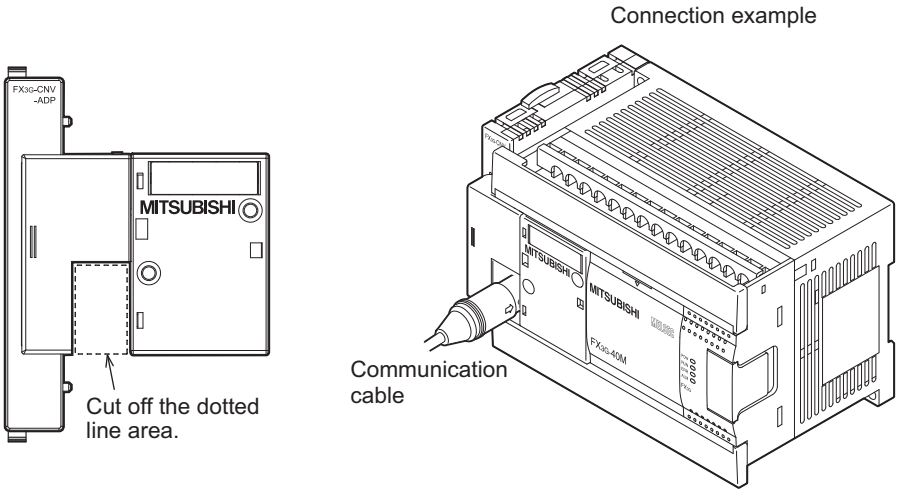

14.1.3 Connection to built-in programming connector (USB)

Connect and disconnect the communication cable for the peripheral device (personal computer).
At connection, confirm the cable and connector shape.

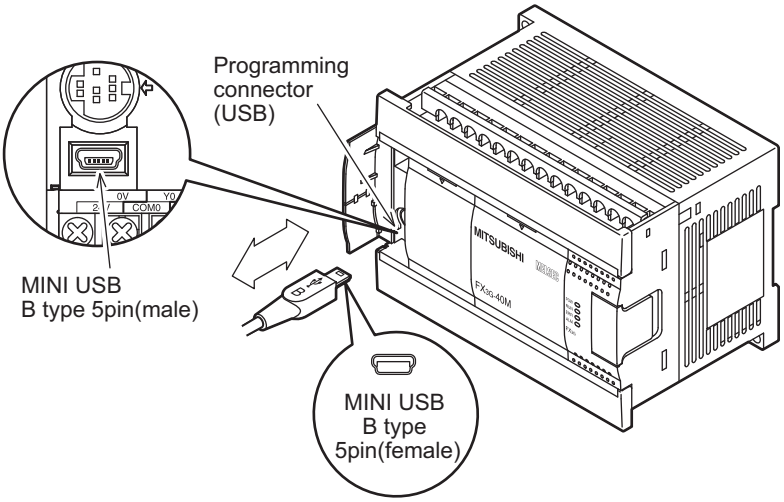

14.1.4 Writing of program and program check [power ON and PLC stopped]

1 Turn on the PLC power.

Make sure that the RUN/STOP switch of the PLC is set to STOP, and turn the power on.

2 Check the program.

Check for circuit errors and grammatical errors with the program check function of the programming tool.

3 Transfer the sequence program.

Write the program to the PLC with the programming tool.

When the memory cassette is used
Make sure to set the PROTECT switch of the memory cassette to OFF (shown right).
→ **For details on handling of the memory cassette, refer to Chapter 21.**

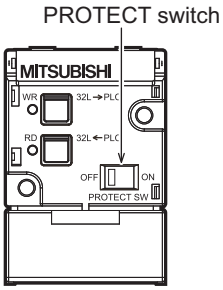

4 Verify the sequence program.

Verify that the program has been correctly written to the PLC.

5 Execute PLC diagnosis.

Check for errors in the PLC main body with the PLC diagnostic function of the programming tool.
→ **For details on the PLC diagnosis with the display module or GX Developer, refer to Section 14.6.**

14.2 Running and Stopping Procedures [Power ON]

14.2.1 Methods of running and stopping

FX3G PLCs can be started or stopped by any of the following three methods.
Two of the methods can be combined.
The RUN/STOP switch is located under the peripheral device connector cover.

1. Operation with built-in RUN/STOP switch

Operate the RUN/STOP switch on the front panel of the main unit to start and stop the PLC (refer to the right figure).
Turn the switch to RUN, and the PLC will start. Turn it to STOP, and the PLC will stop.

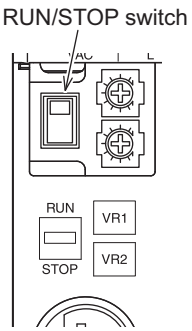

2. Running and stopping with general-purpose input (RUN terminal)

Operation with one switch (RUN)

One of the input terminals X000 to X017*1 of the main unit can be used as a RUN input terminal by a parameter setting (refer to the figure below).
When the specified input terminal is turned on, the PLC starts. When it is turned off, the PLC is started or stopped depending on the state of the built-in RUN/STOP switch.

*1. X000 to X007 in 14-point type main units, and X000 to X015 in 24-point type main units
→ **For details, refer to "Kinds of Parameters and Settings" in Programming Manual.**

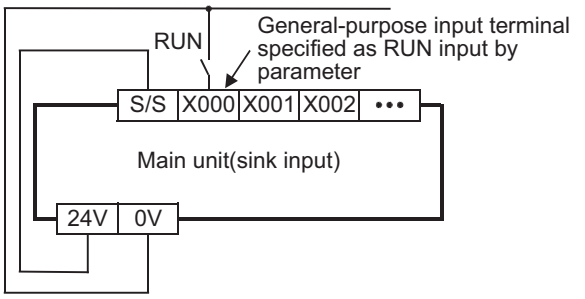

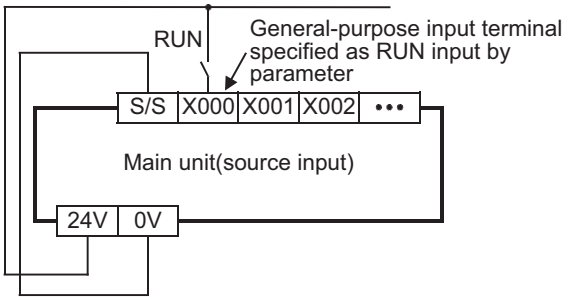

Operation with two switches (RUN and STOP)

The PLC can be started and stopped with individual RUN and STOP pushbutton switches.
For this operation, a sequence program using M8035 to M8037 is necessary.
→ **For details, refer to "Operations of Special Devices" in Programming Manual.**

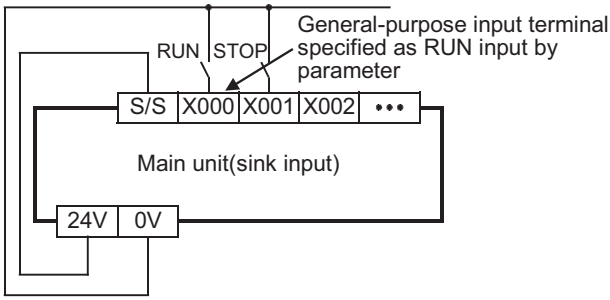

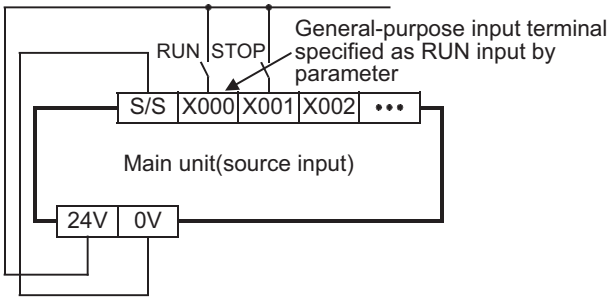

3. Starting and stopping by remote control from programming software

The programming software has a function to forcibly start and stop the PLC by remote control (remote RUN/STOP function).
However, when power is reapplied, the remote RUN/STOP function is disabled. The RUN/STOP status is then determined by the RUN/STOP switch or RUN terminal.
For details on the start and stop procedures with remote control from programming software, refer to Paragraph 2 of Subsection 14.2.2.

14.2.2 Use of several running/stopping methods

1. When the built-in RUN/STOP switch and the general-purpose RUN terminal are used

(without remote running/stopping operation from the programming software)
The RUN/STOP status of the PLC is determined by the conditions shown in the following table.

Condition of built-in RUN/STOP switch	Condition of general-purpose input terminal specified as RUN terminal by parameter	Status of PLC
RUN	OFF	RUN
	ON	RUN
STOP	OFF	STOP
	ON	RUN

Use either built-in RUN/STOP switch or the general input specified as RUN terminal.
(When specifying the general-purpose terminal as the RUN terminal, always set the built-in RUN/STOP switch to STOP.)

2. When the remote running/stopping operation from the programming software is performed

For this operation, keep both the built-in RUN/STOP switch and the general-purpose input RUN terminal in the STOP position.
If the stop command is given from the programming software after the PLC is started by either the built-in RUN/STOP switch or the general-purpose input RUN terminal, the PLC will be restored to the running status by giving the RUN command from the programming software. This can also be accomplished by setting the built-in RUN/STOP switch or the general-purpose input RUN terminal to STOP and then to RUN.

14.3 Operation and Test [Power ON and PLC Running]

14.3.1 Self-diagnostic function

When the PLC's power is turned on, its self-diagnostic function starts automatically. If there are no problems with the hardware, parameters or program, the PLC will start and the RUN command (refer to Section 14.2) is given (RUN LED is lit). If any problems are found, the "ERR" LED flashes or lights.

14.3.2 Test functions

Functions of the programming tool to turn on/off the PLC devices and change the current values/settings are effective or ineffective depending on the PLC status as shown below.

✓ : Effective △ : Conditionally effective - : Ineffective

Item		In running status	In stopped status
Forcible ON/OFF*1	Devices used in program	△*1	△*1
	Devices not in use	✓	✓
Change of current values of timers, counters, data registers, extension registers, extension file registers and file registers	Devices used in program	△*2*3	✓*3
	Devices not in use	✓*3	✓*3
Change of settings of timers and counters*4	When the program memory is the built-in EEPROM	✓	✓
	When the program memory is in the memory cassette and the PROTECT switch is on	-	-
	When the program memory is in the memory cassette and the PROTECT switch is off	✓	✓

*1. Forcible ON/OFF
- The forcible ON/OFF function is effective on the input relays (X), output relays (Y), auxiliary relays (M), state (S), timers (T) and counters (C). On the display module, the function cannot be operated for the input relays (X).
- The forcible ON/OFF function can turn on or off the devices only for one scan.
  While the PLC is running, the function is substantially effective in clearing the current values of the timers (T), counters (C), data registers (D), index registers (Z and V) and extension registers (R) and in controlling the SET/RST circuit and self-retaining circuit. (The operation to forcibly turn on timers is effective only when the timers are driven by the program.)
- The results of forcible ON/OFF operation performed while the PLC in the stopped state or performed for devices not used in the program are retained.
  However, the results of the operation performed for the input relays (X) are not retained because the relays refresh input even while the PLC is in the stopped state. (They are updated according to the input terminal conditions.)

*2. Since the current values may be changed according to MOV instruction in the program and the operation results, the most recently obtained values are retained.

*3. Only display modules can change the current value by the extension file register test function.

*4. Change of timer and counter settings
The settings of the timers (T) and counters (C) can be changed only when the timers are driven by the program.

14.3.3 Program modification function

The sequence program can be transferred while the PLC is running or in the stopped state as shown below.

✓ : Effective - : Ineffective

Item		In running status	In stopped status
Batch writing of file registers (D) and extension file registers (ER)		-	✓
Writing of program to PLC	Partial modification of program	✓*1	✓
	Modification of whole program (batch writing)	-	✓
Writing of parameters to PLC		-	✓
Writing of comments to PLC		-	✓

*1. Since the writing function is used during running, the programming tool must be applicable to the writing function white running, such as GX Developer.

14.3.4 Built-in variable analog potentiometer function

The main unit has two built-in variable analog potentiometers (shown in the figure below).
The current value increases from 0 to 255 when a variable analog potentiometer is turned clockwise.

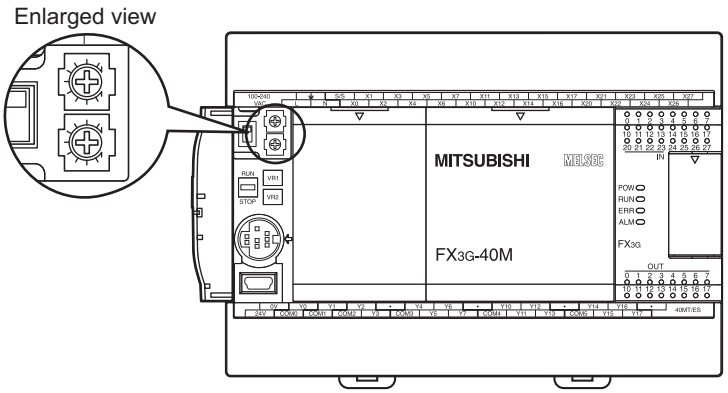

The current value of each variable analog potentiometer is stored in special data registers shown below.

Volume	Data register to store current value
VR1 : variable analog potentiometer1	D8030 (Integer from 0 to 255)
VR2 : variable analog potentiometer2	D8031 (Integer from 0 to 255)

1. Use example 1 of variable analog potentiometer

The current value of VR1 is used as the set value of a timer.

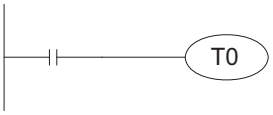

D8030 ····The current value of VR1 is used as the set value of the timer T0.
The setting range in this example using T0 (100ms timer) is from 0 to 25.5 sec.

2. Use example 2 of variable analog potentiometer

The current value of VR2 multiplied by "10" is used as the set value of a timer.

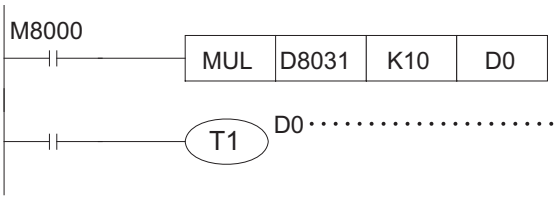

····The value of D8031 is multiplied by "10", and stored in D0.

D0 ·····The current value of VR2 multiplied by "10" is used as the set value of the timer T1.
The setting range in this example using T1 (100ms timer) is from 0 to 255 sec.

14.4 Maintenance and Periodic Inspection

This PLC does not incorporate consumable parts that are factors in the reduction of service life. However, the output relays (points of contact) and batteries (option) have a limited life expectancy.

14.4.1 Procedures for checking model name

The model name of the main unit can be checked on the nameplate on the right side. After extension devices are connected, the nameplate cannot be seen. Check the model name in the following places.

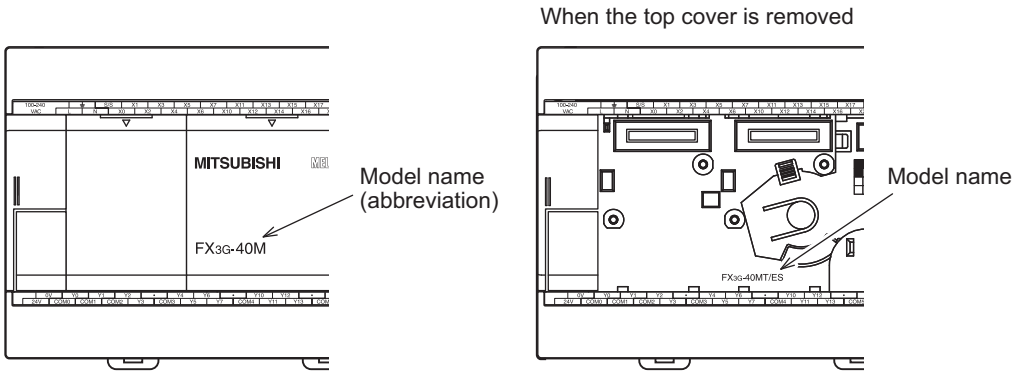

14.4.2 Periodic inspection - battery life, etc.

1. Battery

Part	Life
Model FX3U-32BL battery	Standard life: 5 years (at ambient temperature of 25°C (77°F))

Standard life of FX3U-32BL: 5 years (at ambient temperature of 25°C (77°F))

→ For details on the standard life and recommended replacement frequency, refer to Subsection 22.4.1.

2. Other devices

When inspecting the battery, check the following points.

- Check that the temperature in the panel is not abnormally increased by other heat generating bodies or direct sunlight.
- Check that dust or conductive dust has not entered the panel.
- Check for loosening of wiring and other abnormalities.

3. Battery Replacement

When the battery voltage drops while the PLC power is on, the "ALM" LED on the panel is lit in red, and M8005 and M8006 (latch) are turned on.
The memory can be retained for about one month after the lamps turn on. However, the operators may not immediately find the lamps to be on. Prepare a new battery promptly, and replace the battery with the new one.

→ For details on the specifications and functions of the battery, refer to 22. Battery

Caution

Select the battery mode using a parameter when using the battery.If the battery mode is not selected, the data is not backed up, and the "ALM" LED on the panel does not light.

→ For the battery mode setting method, refer to Subsection 22.3.2.

14.4.3 Maintenance - product life of relay contacts

The product life of relay contacts varies considerably depending on the load type used. Take care that loads generating reverse electromotive force or rush current may cause poor contact or deposition of contacts which may lead to considerable reduction of the contact product life.

1. Inductive load

Inductive loads generate large reverse electromotive force between contacts at shutdown, which may cause arcing. At a fixed current consumption, as the power factor (phase between current and voltage) gets smaller, the arc energy gets larger.

1) Input/output powered extension units and input/output extension blocks

→ **For the applicable models, refer to Chapter 3.**

The standard life of contacts used for Inductive loads, such as contactors and solenoid valves, is 500,000 operations at 20VA.
The following table shows the approximate life of a relay based on the results of an operation life test.

Test condition: 1 sec. ON / 1 sec.OFF

Load capacity		Contact life
20VA	0.2A/100V AC	3,000,000 times
	0.1A/200V AC	
35VA	0.35A/100V AC	1,000,000 times
	0.17A/200V AC	
80VA	0.8A/100V AC	200,000 times
	0.4A/200V AC	

2) FX Series terminal blocks

→ **For the applicable models, refer to Chapter 3.**

The standard life of contacts used for Inductive loads, such as contactors and solenoid valves, is 500,000 operations at 35VA.
The following table shows the approximate life of a relay based on the results of an operation life test.

Test condition: 1 sec. ON / 1 sec.OFF

Load capacity		Contact life
35VA	0.35A/100V AC	3,000,000 times
	0.17A/200V AC	
80VA	0.8A/100V AC	1,000,000 times
	0.4A/200V AC	
120VA	1.2A/100V AC	200,000 times
	0.6A/200V AC	

The product life of relay contacts becomes considerably shorter than the above conditions when the rush overcurrent is shut down.
Please refer to the following measures regarding the inductive load.

→ **For precautions on the main unit, Input/output extension block, refer to Subsection 12.1.3-2.**
→ **For precautions on inductive loads for the terminal block, refer to Subsection 20.7.4-2.**

Some types of inductive loads generate rush current 5 to 15 times the stationary current at activation.
Make sure that the rush current does not exceed the current corresponding to the maximum specified resistance load.

2. Lamp load

Lamp loads generally generate rush current 10 to 15 times the stationary current. Make sure that the rush current does not exceed the current corresponding to the maximum specified resistance load.

3. Capacitive load

Capacitive loads can generate rush current 20 to 40 times the stationary current. Make sure that the rush current does not exceed the current corresponding to the maximum specified resistance load. Capacitive loads such as capacitors may be present in electronic circuit loads including inverters.

* About the maximum load specifications of the resistance load, refer to the specification for each model.

→ **For specifications on the input/output powered extension units, refer to Chapter 15.**
→ **For specifications on the input/output extension blocks, refer to Chapter 16.**
→ **For specifications on the terminal block, refer to Chapter 20.**

14.5 Troubleshooting with LEDs

When trouble occurs, check the LEDs on the PLC to identify the problem with the PLC.

14.5.1 POW LED [on/flashing/off]

State of LED	State of PLC	Remedies
On	Power of the specified voltage is being correctly supplied to the power supply terminal.	The power supply is normal.
Flashing	One of the following problems may have occurred. • Power of the specified voltage and current is not being supplied to the power supply terminal. • External wiring is incorrect. • Internal error of PLC	• Check the supply voltage. • After disconnecting the cables other than the power cable, re-apply power to the PLC, and check for changes in the state. If no improvement is obtained, consult your local Mitsubishi Electric distributer.
Off	One of the following problems may have occurred. • The power supply is off. • External wiring is incorrect. • Power of the specified voltage is not being supplied to the power supply terminal. • The power cable is broken.	• If the power is not off, check the power supply and the power supply route. If power is being supplied correctly, consult your local Mitsubishi Electric distributer. • After disconnecting the cables other than the power cable, re-apply power to the PLC, and check for changes in the state. If no improvement is obtained, consult your local Mitsubishi Electric distributer.

14.5.2 ALM LED [on/off]

This LED is valid when the optional battery is installed and the battery mode is selected using a parameter.

State of LED	State of PLC	Remedies
On	The battery voltage is low.	Immediately replace the battery. (Refer to Section 22.5.)
Off	The battery voltage is higher than the value set with D8006.	Normal

→ **For details on the battery, refer to Chapter 22.**

14.5.3 ERR LED [on/flashing/off]

State of LED	State of PLC	Remedies
On	A watchdog timer error may have occurred, or the hardware of the PLC may be damaged.	1) Stop the PLC, and re-apply power. If ERR LED goes off, a watchdog timer error may have occurred. Take any of the following measures. - Review the program. The maximum value (D8012) of the scan time should not exceed the setting (D8000) of the watchdog timer. - Check that the input used for input interruption or pulse catch is not being abnormally turned on and off in one scan. - Check that the frequency of the pulse (duty of 50%) input to the high-speed counter does not exceed the specified range. - Add the WDT instructions. Add some WDT instructions to the program, and reset the watchdog timer several times in one scan. - Change the setting of the watchdog timer. Change the watchdog timer setting (D8000) in the program so that the setting is larger than the maximum value of the scan time (D8012). 2) Remove the PLC and supply power to it from another power supply on a desk. If the ERR LED goes off, noise may have affected the PLC. Take the following measures. - Check the ground wiring, and reexamine the wiring route and installation location. - Fit a noise filter onto the power supply line. 3) If the ERR LED does not go off even after the measures stated in (1) and (2) are taken, consult your local Mitsubishi Electric distributer.
Flashing	One of the following errors has occurred in the PLC. • Parameter error • Syntax error • Ladder error	Perform PLC diagnosis and program check with the programming tool. For the remedies, refer to 14.6 Judgment by Error Codes and Representation of Error Codes.
Off	No errors that stop the PLC have occurred.	If the operations of the PLC are abnormal, perform PLC diagnosis and program check with the programming tool. An I/O error, Comms.error or Runtime error may have occurred.

14.6 Judgment by Error Codes and Representation of Error Codes

Error codes can be checked with the programming tool and display module.

14.6.1 Operation and check by GX Developer

1 Connect the personal computer and the PLC.

2 Execute the PLC diagnosis.

Click [Diagnostics] → [PLC diagnostics] on the tool menu, and the diagnosis of PLC will start.

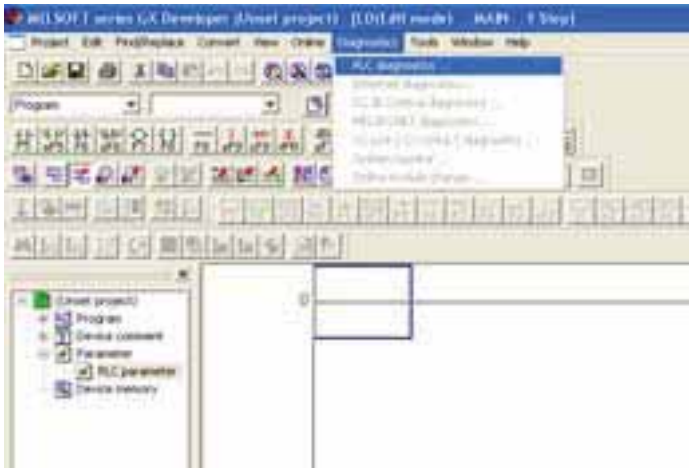

3 Check the results of diagnosis.

Display the following window to check the errors.

Example: one error occurs

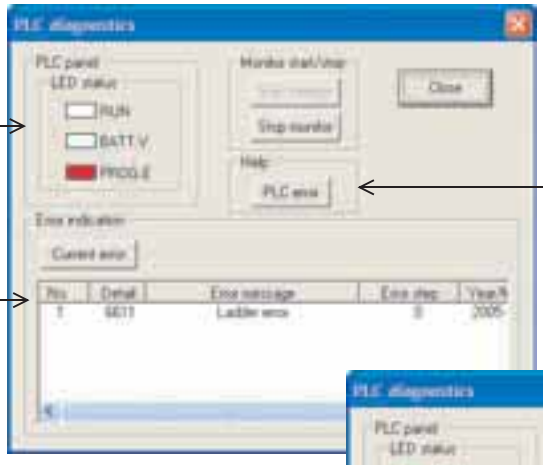

The LED status of FX PCL is displayed.

Open the help window of GX Developer to check the error details.

The error in PLC is displayed.

Example: No error

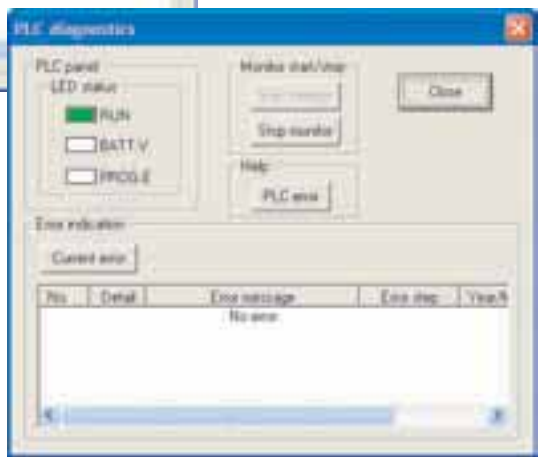

14.6.2 Operation and check on display module (FX3G-5DM)

1) Move the cursor to "ErrorCheck" pressing the + or - button on the menu screen (shown right). For the menu structure, refer to Section 19.5.

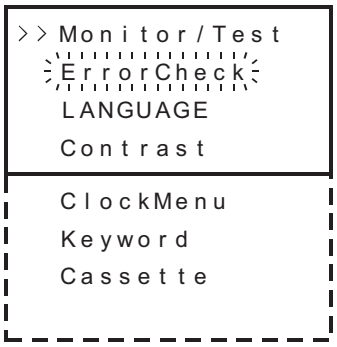

The buttons on the menu screen work as stated below.

Button	Operation Description
ESC	The screen returns to the top screen (time display).
-	The cursor moves upward. When the button is held for 1 second or more, the cursor moves quickly. When the cursor is in the uppermost position, the button is ineffective.
+	The cursor moves downward. When the button is held for 1 second or more, the cursor moves quickly. When the cursor is in the lowermost position, the button is ineffective.
OK	The flashing item at the cursor is selected.

2) When the OK button is pressed, an error check is performed. The results are displayed on the error display screen (shown to the right).
Pressing the ESC button on the menu screen cancels the operation and returns the screen to the top screen (time display).

When no errors have occurred



3) If some errors have occurred, the pages can be switched with the + or - button.

Button		Operation Description
ESC		The screen returns to the Menu screen.
-	1 error or less	Ineffective operation
	2 errors or more	The previous page of the error display screen is displayed.
+	1 error or less	Ineffective operation
	2 errors or more	The following page of the error display screen is displayed.
OK		The screen returns to the Menu screen.

When 1 error has occurred

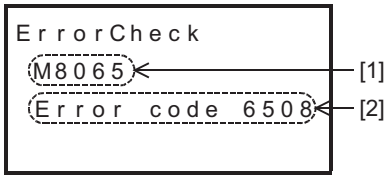

When multiple errors have occurred

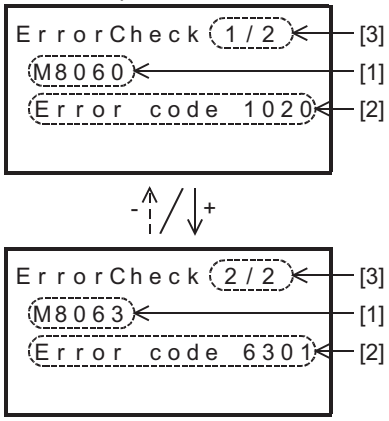

Displayed data

	Display Content
[1]	Flag of occurred error
[2]	Error code
[3]	Number of simultaneously occurring errors (displayed only when more than one error has occurred)

4) Pressing the ESC button cancels the operation and returns the screen to the Menu screen.

14.6.3 Representation of errors

Errors are represented in this manual, GX Developer as shown in the following table.

This manual	GX Developer	
	English version	Japanese version
I/O configuration error	I/O config err	I/O構成ｴﾗｰ
PLC hardware error	PLC H/W error	PC ハードウェアエラー
PLC/PP communication error	PLC/PP comm err	PC/PP 通信 エラー
Serial communication error 1 [ch1]	Link error	リンク エラー
Serial communication error 2 [ch2]	Link error2	シリアル通信エラー2 [ch2]
Parameter error	Param error	パラメータ エラー
Syntax error	Syntax error	文法 エラー
Circuit error	Ladder error	回路 エラー
Operation error	Operation err	演算 エラー
Special block error	-	-

14.6.4 Error Code List and Action

When a program error occurs in the PLC, the error code is stored in special data registers D8061 - D8067 and D8438. The following actions should be followed for diagnostic errors.

Error code	PLC operation at error occurrence	Contents of error	Action
I/O configuration error [M8060(D8060)]			
Example: 1020	Continues operation	The head number of unconnected I/O devic Example: When X020 is unconnected 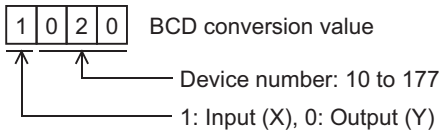 • 1st to 3rd digits: Device number • 4th digit: I/O type (1 = input (X), 0 = output (Y)) Example: When 1020 is stored in D8060 Inputs X020 and later are unconnected.	Unconnected I/O relay numbers are programmed. The PLC continues its operation. Modify the program, check wiring connection, or add the appropriate unit/block.
Serial communication error 2 [M8438 (D8438)]			
0000	—	No error	
3801	Continues operation	Parity, overrun or framing error	• Inverter communication, computer link and programming: Ensure the communication parameters are correctly set according to their applications. • N:N network, parallel link, etc.: Check programs according to the applications. • Remote maintenance: Ensure modem power is ON and check the settings of the AT commands. • Wiring: Check the communication cables for correct wiring.
3802		Communication character error	
3803		Communication data sum check error	
3804		Communication data format error	
3805		Command error	
3806		Communication time-out detected	
3807		Modem initialization error	
3808		N:N network parameter error	
3812		Parallel link character error	
3813		Parallel link sum error	
3814		Parallel link format error	
3820		Inverter communication error	
PLC hardware error [M8061(D8061)]			
0000	—	No error	
6101	Stops operation	RAM error	When memory casette is used, make sure that the memory cassette is installed correctly.
6102		Operation circuit error	
6103		I/O bus error (M8069 = ON)	Check for the correct connection of extension cables.
6104		Powered extension unit 24 V failure (M8069 = ON)	
6105		Watchdog timer error	Check user program. The scan time exceeds the value stored in D8000.
6106		I/O table creation error (CPU error)	When turning the power ON to the main unit, a 24V power failure occurs in a powered extension unit. (The error occurs if the 24V power is not supplied for 10 seconds or more after the main power is turned ON.)
PLC/PP communication error (D8062)			
0000	—	No error	
6201	Continues operation	Parity, overrun or framing error	Check the cable connection between the programming panel (PP) / programming device and the PLC. This error may occur when a cable is disconnected and reconnected during PLC monitoring.
6202		Communication character error	
6203		Communication data sum check error	
6204		Data format error	
6205		Command error	

Error code	PLC operation at error occurrence	Contents of error	Action
Serial communication error 1 [M8063 (D8063)]			
0000	—	No error	
6301	Continues operation	Parity, overrun or framing error	• Inverter communication, computer link and programming: Ensure that the communication parameters are correctly set according to their applications. • N:N network, parallel link, etc.: Check programs according to applications. • Remote maintenance: Ensure modem power is ON and check the settings of the AT commands. • Wiring: Check the communication cables for correct wiring.
6302		Communication character error	
6303		Communication data sum check error	
6304		Communication data format error	
6305		Command error	
6306		Communication time-out detected	
6307		Modem initialization error	
6308		N:N network parameter error	
6312		Parallel link character error	
6313		Parallel link sum error	
6314		Parallel link format error	
6320		Inverter communication error	
Parameter error [M8064(D8064)]			
0000	—	No error	
6401	Stops operation	Program sum check error	STOP the PLC, and correctly set the parameters.
6402		Memory capacity setting error	
6403		Latched device area setting error	
6404		Comment area setting error	
6405		File register area setting error	
6406		Special unit (BFM) initial value setting, positioning instruction setting sum check error	
6407		Special unit (BFM) initial value setting, positioning instruction setting error	
6409		Other setting error	
Syntax error [M8065(D8065)]			
0000	—	No error	
6501	Stops operation	Incorrect combination of instruction, device symbol and device number	During programming, each instruction is checked. If a syntax error is detected, modify the instruction correctly.
6502		No OUT T or OUT C before setting value	
6503		No setting value after OUT T or OUT C Insufficient number of operands for an applied instruction	
6504		Same label number is used more than once. Same interrupt input or high speed counter input is used more than once.	
6505		Device number is out of allowed range.	
6506		Invalid instruction	
6507		Invalid label number [P]	
6508		Invalid interrupt input [I]	
6509		Other error	
6510		MC nesting number error	

Error code	PLC operation at error occurrence	Contents of error	Action
Circuit error [M8066(D8066)]			
0000	—	No error	
6610	Stops operation	LD, LDI is continuously used 9 times or more.	This error occurs when a combination of instructions is incorrect in the entire circuit block or when the relationship between a pair of instructions is incorrect. Modify the instructions in the program mode so that their mutual relationship becomes correct.
6611		More ANB/ORB instructions than LD/LDI instructions	
6612		Less ANB/ORB instructions than LD/LDI instructions	
6613		MPS is continuously used 12 times or more.	
6614		No MPS instruction	
6615		No MPP instruction	
6616		No coil between MPS, MRD and MPP, or incorrect combination	
6617		Instruction below is not connected to bus line: STL, RET, MCR, P, I, DI, EI, FOR, NEXT, SRET, IRET, FEND or END	
6618		STL, MC or MCR can be used only in main program, but it is used elsewhere (e.g. in interrupt routine or subroutine).	
6619		Invalid instruction is used in FOR-NEXT loop: STL, RET, MC, MCR, I (interrupt pointer) or IRET.	
6620		FOR-NEXT instruction nesting level exceeded	
6621		Numbers of FOR and NEXT instructions do not match.	
6622		No NEXT instruction	
6623		No MC instruction	
6624		No MCR instruction	
6625		STL instruction is continuously used 9 times or more.	
6626		Invalid instruction is programmed within STL-RET loop: MC, MCR, I (interrupt pointer), SRET or IRET.	
6627		No STL instruction	
6628		Invalid instruction is used in main program: I (interrupt pointer), SRET or IRET	
6629		No P or I (interrupt pointer)	
6630		No SRET or IRET instruction STL-RET or MC-MCR instructions in subroutine	
6631		SRET programmed in invalid location	
6632		FEND programmed in invalid location	

Error code	PLC operation at error occurrence	Contents of error	Action
Operation error [M8067(D8067)]			
0000	—	No error	
6701	Continues operation	• No jump destination (pointer) for CJ or CALL instruction • Label is undefined or out of P0 to P4095 due to indexing. • Label P63 is executed in CALL instruction; cannot be used in CALL instruction as P63 is for jumping to END instruction.	This error occurs in the execution of operation. Review the program, or check the contents of the operands used in the applied instructions. Even if the syntax or circuit design is correct, an operation error may still occur. For example: "T500Z" itself is not an error. But if Z had a value of 100, the timer T600 would attempt to be accessed. This would cause an operation error since there is no T600 device available.
6702		CALL instruction nesting level is 6 or more	
6703		Interrupt nesting level is 3 or more	
6704		FOR-NEXT instruction nesting level is 6 or more.	
6705		Operand of applied instruction is inapplicable device.	
6706		Device number range or data value for operand of applied instruction exceeds limit.	
6707		File register is accessed without parameter setting of file register.	
6708		FROM/TO instruction error	This error occurs in the execution of the operation. • Review the program, or check the contents of the operands used in the applied instructions. • Check whether the specified buffer memories exist in the equipment. • Check whether the extension cables are correctly connected.
6709		Other (e.g. improper branching)	This error occurs in the execution of operation. Review the program, or check the contents of the operands used in the applied instructions. Even if the syntax or circuit design is correct, an operation error may still occur. For example: "T500Z" itself is not an error. But if Z had a value of 100, the timer T600 would attempt to be accessed. This would cause an operation error since there is no T600 device available.
6710		Mismatch among parameters	This error occurs when the same device is used within the source and destination in a shift instruction, etc.
6730		Incorrect sampling time (TS) (TS ≤ 0)	<PID instruction is stopped.> This error occurs in the parameter setting value or operation data executing PID instruction. Check the contents of the parameters.
6732		Incompatible input filter constant (α) (α < 0 or 100 ≤ α)	
6733		Incompatible proportional gain (KP) (KP < 0)	
6734		Incompatible integral time (TI) (TI < 0)	
6735		Incompatible derivative gain (KD) (KD < 0 or 201 ≤ KD)	
6736		Incompatible derivative time (TD) (TD < 0)	
6740		Sampling time (TS) ≤ Scan time	<Auto tuning is continued.> The operation is continued in the condition "sampling time (TS) = cyclic time (scan time)".

Error code	PLC operation at error occurrence	Contents of error	Action
Operation error [M8067(D8067)]			
6742	Continues operation	Variation of measured value exceeds limit. (△PV < -32768 or +32767 < △PV)	<PID operation is continued.> The operation is continued with each parameter set to the maximum or minimum value.
6743		Deviation exceeds limit. (EV < -32768 or +32767 < EV)	
6744		Integral result exceeds limit. (Outside range from -32768 to +32767)	
6745		Derivative value exceeds limit due to derivative gain (KD).	
6746		Derivative result exceeds limit. (Outside range from -32768 to +32767)	
6747		PID operation result exceeds limit. (Outside range from -32768 to +32767)	
6748		PID output upper limit set value < PID output lower limit set value.	<Transpose of output upper limit value and output lower limit value. → PID operation is continued.> Check whether the target setting contents are correct.
6749		Abnormal PID input variation alarm set value or output variation alarm set value (Set value < 0)	<Alarm output is not given. → PID operation is continued.> Check whether the target setting contents are correct.
6750		<Step response method> Improper auto tuning result	<Auto tuning is finished. → PID operation is started.> • The deviation at start of auto tuning is 150 or less. • The deviation at end of auto tuning is 1/3 or more of the deviation at start of auto tuning. Check the measured value and target value, and then execute auto tuning again.
6751		<Step response method> Auto tuning operation direction mismatch	<Auto tuning is forcibly finished. → PID operation is not started.> The operation direction estimated from the measured value at the start of auto tuning was different from the actual operation direction of the output during auto tuning. Correct the relationship among the target value, output value for auto tuning, and the measured value, and then execute auto tuning again.
6752		<Step response method> Improper auto tuning result	<Auto tuning is finished. → PID operation is not started.> Because the set value was fluctuated during auto tuning, auto tuning was not executed correctly. Set the sampling time to a value larger than the output change cycle, or set a larger value for the input filter constant. After changing the setting, execute auto tuning again.
6753		<Limit cycle method> Auto tuning operation direction mismatch	<Auto tuning is forcibly finished. → PID operation is not started.> Check whether the target setting contents are correct.
6754		<Limit cycle method> Abnormal PV threshold (hysteresis) set value for auto tuning (SHPV < 0)	
6755		<Limit cycle method> Abnormal auto tuning transfer status (Data of device controlling transfer status is abnormally overwritten.)	<Auto tuning is forcibly finished. → PID operation is not started.> Ensure that devices occupied by PID instruction are not overwritten in the program.
6756		<Limit cycle method> Abnormal result due to excessive auto tuning measurement time (τon > τ, τon < 0, τ < 0)	<Auto tuning is forcibly finished. → PID operation is not started.> The auto tuning time is longer than necessary. Increase the difference (ULV - LLV) between the upper limit and lower limit of the output value for auto tuning, set a smaller value to the input filter constant (α), or set a smaller value to the PV threshold (SHPV) for auto tuning, and then check the result for improvement.

Error code	PLC operation at error occurrence	Contents of error	Action
Operation error [M8067(D8067)]			
6757	Continues operation	<Limit cycle method> Auto tuning result exceeds proportional gain. (KP = outside range from 0 to 32767)	<Auto tuning is finished (KP = 32767). → PID operation is started.> The variation of the measured value (PV) is small compared with the output value. Multiply the measured value (PV) by "10" so that the variation of the measured value will increase during auto tuning.
6758		<Limit cycle method> Auto tuning result exceeds integral time. (TI = outside range from 0 to 32767)	<Auto tuning is finished (KP = 32767). → PID operation is started.> The auto tuning time is longer than necessary. Increase the difference (ULV - LLV) between the upper limit and lower limit of the output value for auto tuning, set a smaller value to the input filter constant (α), or set a smaller value to the PV threshold (SHPV) for auto tuning, and then check the result for improvement.
6759		<Limit cycle method> Auto tuning result exceeds derivative time. (TD = outside range from 0 to 32767)	
6760		ABS data read from servo sum check error	Check servo wiring and parameter setting. Also check ABS instruction.
6762		Port specified by inverter communication instruction is already used in another communication.	Check to make sure the port is not specified by another instruction.
6763		Input (X) specified by DSZR or ZRN instruction is already used in another instruction.	Check to make sure the input (X), as specified by DSZR or ZRN instruction, is not being used for the following purposes: - Input interrupt (including the delay function) - High speed counter C235 to C255 - Pulse catch M8170 to M8175 - SPD instruction
6764		Pulse output number is already used in a positioning instruction or pulse output instruction (PLSY, PWM, etc.).	Check to make sure the pulse output destination is not being driven by another positioning instruction.
6765		Number of applied instruction exceeds limit.	The number of times an applied instruction is used in the program exceeds the specified limit.
6770		EEPROM access error	
6772		EEPROM memory cassette is protected against writing.	The write-protect switch of the EEPROM memory cassette was set to ON when data was transferred to the EEPROM memory.
Special block error [M8449 (D8449)]			
□020*1	Continues operation	General data sum error	Check for the correct connection of extension cables.
□021*1		General data message error	
□080*1		FROM/TO error	This error occurs in the execution of operation. • Review the program, or check the contents of the operands used in the applied instructions. • Check whether the specified buffer memories exist in the counterpart equipment. • Check for the correct connection of extension cables.
□090*1		Peripheral equipment access error	• Check the cable connection between the programming panel (PP) / programming device and the PLC. • Check for the correct connection of extension cables.

*1. The unit number 0 to 7 of the special function unit/block error is put in □.

14.7 Troubleshooting

→ For the procedures on running and stopping the PLC, refer to Section 14.2.
→ For the procedures on operating peripheral devices, refer to the manuals for the peripheral devices.
→ For the phone numbers and addresses of Mitsubishi Electric System & Service Co., Ltd., refer to the service network at the end of this manual.

14.7.1 Output does not operate (main unit and input/output extension blocks)

1. Output does not turn on.

Stop the PLC, and forcibly turn the inoperable output on then off with a peripheral device or the display module to check its operation.
Check for troubles with external wiring.

- When the output operates
  The output may be turned off unintentionally in the program. Reexamine the program.
  (Duplicate coil or RST instructions)
- When the output does not operate
  Check the configuration of the connected devices and the connection of the extension cables.
  If the configuration of the external wiring and connected devices and the connection of the extension cables are acceptable, the output circuit may be damaged.
  Consult your local Mitsubishi Electric distributer.

2. Output does not turn off.

Stop the PLC, and check that the output turns off.
Check for trouble with external wiring.

→ For the procedures on running and stopping the PLC, refer to Section 14.2.

- When the output turns off
  The output may be turned on unintentionally in the program.
  Check that there are no duplicate coils in the program.
- When the output does not turn off
  The output circuit may be damaged. Consult your local Mitsubishi Electric distributer.

14.7.2 24V DC input does not operate (main unit and input/output extension blocks)

1. Input does not turn on.

Disconnect the external wiring and connect the S/S terminal and the 0V terminal or the 24V terminal.
Short-circuit the 0V terminal or 24V terminal not connected to the S/S terminal and the input terminal, then check the input display LED or a peripheral device to confirm that the input turns on.

	Measures
When input turns on	Check that the input device does not have a built-in diode or parallel resistance. If so, refer to Subsection 10.2.2.
When input does not turn on	Measure the voltage between the 0V terminal or 24V terminal not connected to the S/S terminal and the input terminal with a tester to confirm that the voltage is 24V DC. • Check the configuration of the external wiring and connected devices and the connection of the extension cables.

2. Input does not turn off.

Check for leakage current from input devices.
If the leakage current is 1.5mA or more, it is necessary to connect a bleeder resistance.

→ For details on the measures, refer to Subsection 10.2.2.

14.7.3 Cautions in registering keyword

1. **Cautions in registering keyword**
   The keyword limits access to the program prepared by the user from peripheral devices.
   Keep the keyword carefully.
   If you forget the keyword, you cannot operate the PLC online from the programming tool depending on the type of the programming tool and the registered keyword.

2. **Caution on using a peripheral device which does not support the second keyword and customer keyword**
   Sequence programs in which the second keyword and customer keyword are registered cannot be all-cleared using the programming tool (GX Developer whose version is earlier than Ver. 8.72A).

3. **Non-resettable protect function**
   When the non-resettable protect function is set, the protect function cannot be reset.

15. Input/Output Powered Extension Units

DESIGN PRECAUTIONS ⚠DANGER

- Make sure to have the following safety circuits outside of the PLC to ensure safe system operation even during external power supply problems or PLC failure.
  Otherwise, malfunctions may cause serious accidents.
  1) Most importantly, have the following: an emergency stop circuit, a protection circuit, an interlock circuit for opposite movements (such as normal vs. reverse rotation), and an interlock circuit (to prevent damage to the equipment at the upper and lower positioning limits).
  2) Note that when the PLC CPU detects an error, such as a watchdog timer error, during self-diagnosis, all outputs are turned off. Also, when an error that cannot be detected by the PLC CPU occurs in an input/output control block, output control may be disabled.
     External circuits and mechanisms should be designed to ensure safe machinery operation in such a case.
  3) Note that when the PLC CPU detects an error, such as a watchdog timer error, during self-diagnosis, all outputs are turned off. Also, when an error that cannot be detected by the PLC CPU occurs in an input/output control block, output control may be disabled.
     External circuits and mechanisms should be designed to ensure safe machinery operation in such a case.
  4) Note that when an error occurs in a relay, triac or transistor output device, the output could be held either on or off.
     For output signals that may lead to serious accidents, external circuits and mechanisms should be designed to ensure safe machinery operation in such a case.

DESIGN PRECAUTIONS ⚠CAUTION

- Do not bundle the control line together with or lay it close to the main circuit or power line. As a guideline, lay the control line at least 100mm (3.94") or more away from the main circuit or power line.
  Noise may cause malfunctions.

WIRING PRECAUTIONS ⚠DANGER

- Connect the AC power supply to the dedicated terminals specified in this manual.
  If an AC power supply is connected to a DC input/output terminal or DC power supply terminal, the PLC will burn out.
- Make sure to cut off all phases of the power supply externally before attempting installation or wiring work.
  Failure to do so may cause electric shock or damage to the product.
- Make sure to attach the terminal cover, offered as an accessory, before turning on the power or initiating operation after installation or wiring work.
  Failure to do so may cause electric shock.

WIRING PRECAUTIONS ⚠ **CAUTION**

- Do not supply power to the [24+] and [24V] terminals (24V DC service power supply) on the main unit or extension units.
  Doing so may cause damage to the product.
- Perform class D grounding (grounding resistance: 100 Ω or less) to the grounding terminal on the main unit and extension units with a wire 2mm^2 or thicker.
  Do not use common grounding with heavy electrical systems (refer to Section 9.3).
- Connect the DC power supply to the dedicated terminals specified in this manual.
  If an AC power supply is connected to a DC input/output terminal or DC power supply terminal, the PLC will burn out.
- Do not wire vacant terminals externally.
  Doing so may damage the product.
- When drilling screw holes or wiring, make sure cutting or wire debris does not enter the ventilation slits.
  Failure to do so may cause fire, equipment failures or malfunctions.
- Make sure to properly wire the FX2N/FX3U Series extension equipment in accordance with the following precautions.
  Failure to do so may cause electric shock, a short-circuit, wire breakage, or damage to the product.
  - The disposal size of the cable end should follow the dimensions described in this manual.
  - Tightening torque should be between 0.5 and 0.8 N•m.

15.1 Outline

An input/output powered extension unit is used to expand inputs/outputs.
Power can be supplied to subsequent extension blocks from an input/output powered extension unit with a built-in 24V DC power supply.
An input/output powered extension unit is required when the capacity of the main unit's built-in power supply is insufficient for the current consumption demands of the extension blocks.

15.1.1 Product configuration

There are various types of input/output powered extension units. They differ in supply voltage, number of input/output points, input form, output form and connection type.

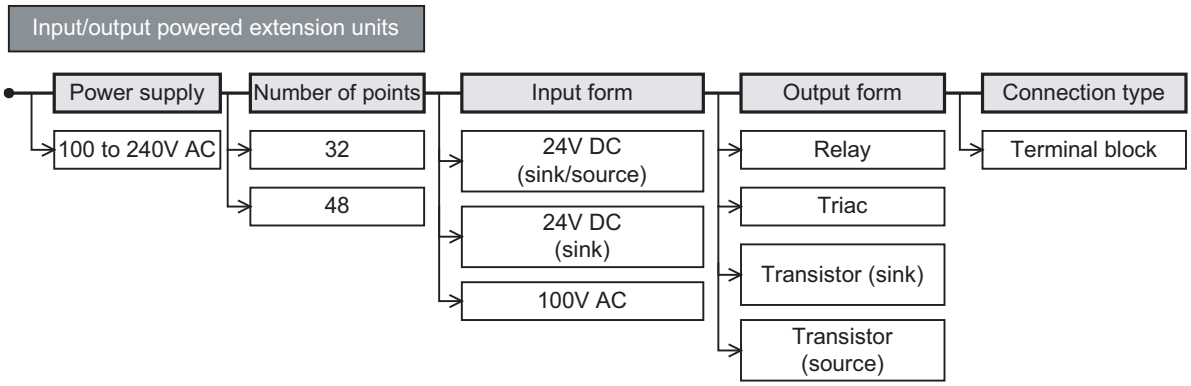

15.1.2 Product list

Each model of input/output powered extension unit has a sink and source type and a sink type. If you intend to add input/output powered extension units, we recommend you to add the same types of units as the main unit or the sink and source type.

Sink :Sink [-common], Source :Source [+common]

Model	Input			Output			Connection type
	Type	Number of points	Common wiring system	Type	Number of points	Common wiring system	
AC power supply common to 24V DC sink and source input							
FX2N-32ER-ES/UL	24V DC	16	Sink Source	Relay	16	-	Terminal block
FX2N-48ER-ES/UL		24	Sink Source		24	-	
FX2N-32ET-ESS/UL		16	Sink Source	Transistor	16	Source	
FX2N-48ET-ESS/UL		24	Sink Source		24	Source	
AC power supply only for 24V DC sink input							
FX2N-32ER	24V DC	16	Sink	Relay	16	-	Terminal block
FX2N-48ER		24	Sink		24	-	
FX2N-32ES		16	Sink	Triac(SSR)	16	-	
FX2N-32ET		16	Sink	Transistor	16	Sink	
FX2N-48ET		24	Sink		24	Sink	
AC power supply only for 100V AC							
FX2N-48ER-UA1/UL	100V AC	24	-	Relay	24	-	Terminal block

15.2 Power supply specifications

Item		FX2N-32ER-ES/UL FX2N-32ET-ESS/UL	FX2N-32ER FX2N-32ES FX2N-32ET	FX2N-48ER-ES/UL FX2N-48ET-ESS/UL	FX2N-48ER FX2N-48ET
Classification		FX2N powered extension unit			
Supply voltage		100 to 240V AC			
Allowable supply voltage range		85 to 264V AC			
Rated frequency		50/60 Hz			
Power fuse		250V 3.15A(3A) 5φ x 20mm (0.79")		250V 5A 5φ x 20mm (0.79")	
Rush current	100V AC	Up to 40A, 5ms or less			
	200V AC	Up to 60A, 5ms or less			
Power consumption		30W (35VA)		35W (45VA)	
24V DC service power supply	Without extension block	24V DC, 250mA or less		24V DC, 460mA or less	
	With extension block	When input/output extension blocks are connected, 24V DC service power is consumed by them. → **For details, refer to Chapter 6.**			
Connection type		Removable terminal block (M3 screw)			

Item		FX2N-48ER-UA1/UL
Classification		FX2N powered extension unit
Supply voltage		100 to 240V AC
Allowable supply voltage range		85 to 264V AC
Power fuse		250V 5A 5φ x 20mm (0.79")
Rush current	100V AC	Up to 40A, 5ms or less
	200V AC	Up to 60A, 5ms or less
Power consumption		35W (45VA)
24V DC service power supply		None
Connection type		Removable terminal block (M3 screw)

15.2.1 Weight, accessories, etc.

Item	FX2N-32ER-ES/UL FX2N-32ET-ESS/UL	FX2N-32ER FX2N-32ES FX2N-32ET	FX2N-48ER-ES/UL FX2N-48ET-ESS/UL	FX2N-48ER FX2N-48ET	FX2N-48ER-UA1/UL
MASS (Weight)	0.65kg (1.43 lbs)		0.85kg (1.87 lbs)		1.00kg (2.2 lbs)
Accessories	• Terminal protective cover (2 pcs.) (Fitted to FX2N-32ER-ES/UL, FX2N-32ET-ESS/UL, FX2N-48ER-ES/UL, FX2N-48ET-ESS/UL and FX2N-48ER-UA1/UL) • Extension cable (55mm (2.16")) Optional extension cables (FX0N-30EC and FX0N-65EC) are available. • Input/output number label				
Others	• The terminal block uses M3 terminal screws. • Installation of the DIN46277 (35mm (1.37") wide) rail or screws.				

15.2.2 Part names

1. Front

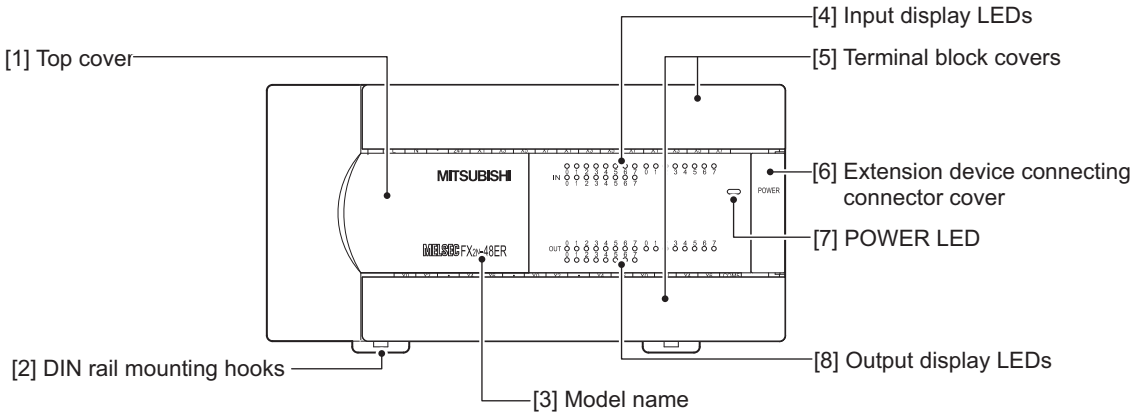

[1] Top cover
When adding this to the main unit, connect the supplied extension cable or the optional extension cable to the connector under this top cover.

[2] DIN rail mounting hooks (2 places)
The input/output powered extension unit can be installed on DIN rail (35mm (1.38") wide).

[3] Model name
The model name of the input/output powered extension unit is indicated.

[4] Input display LEDs (red)
When an input terminal (X0, X1, etc.) is turned on, the corresponding LED lamps are also turned on.
The input numbers change depending on input/output allocation.
The input/output powered extension unit (48 points type) assigns input numbers in ascending order from A→B→C below.

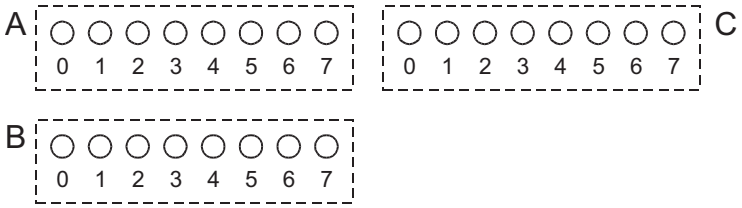

[5] Terminal block covers
The covers can be opened about 90° for wiring.
Keep the covers closed while the PLC is running (the unit power is on).

[6] Extension device connecting connector cover
Connect the extension cable of input/output powered extension unit/block or special function unit/block to the extension device connecting connector under this cover.
FX3U Series extension devices, FX2N Series extension devices, are compatible and can be connected.
→ **For details on extension devices, refer to Chapter 15, Chapter 16 and Section 18.1.**

[7] POWER LED (green)
The LED lamp is on (green) while the power supply terminal is on.

[8] Output display LEDs (red)
When an output terminal (Y0, Y1, etc.) is turned on, the corresponding LED lamps are also turned on. The output numbers change depending on input/output allocation.
The input/output powered extension unit (48 points type) assigns output numbers in ascending order from A→B→C below.

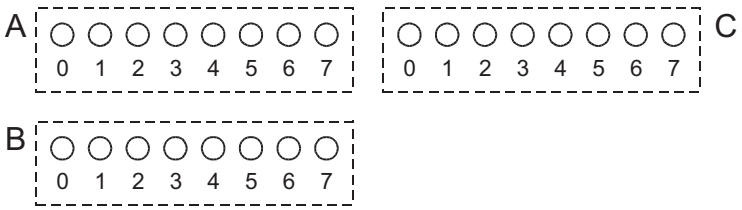

When the terminal block covers are open

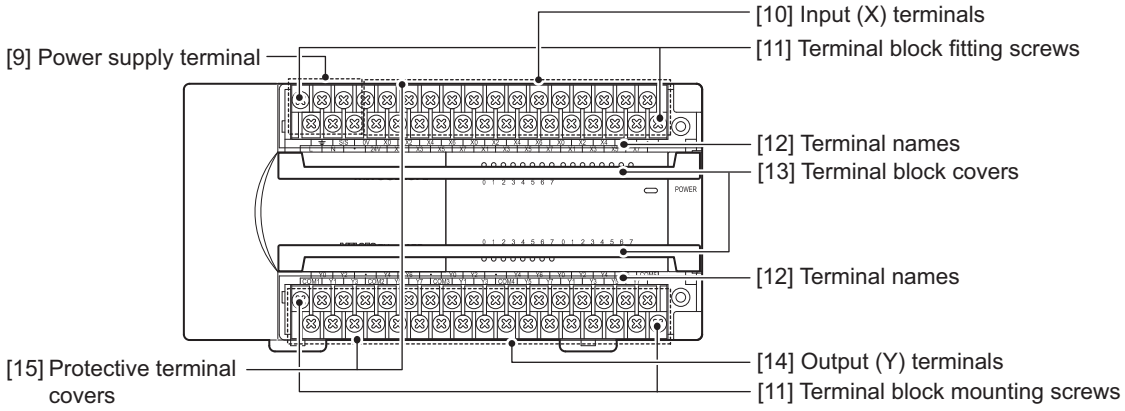

[9]	**Power supply terminal**	Connect the power supply to the input/output powered extension unit at this terminal.
[10]	**Input (X) terminals**	Wire switches and sensors to these terminals.
[11]	**Terminal block mounting screws**	If the input/output powered extension unit must be replaced, loosen these screws to remove the upper part of the terminal block. → **For anchoring the terminal block, refer to Subsection 9.1.2.**
[12]	**Terminal names**	The signal names for the power supply, input terminals and output terminals are shown.
[13]	**Terminal block covers**	Protects the upper and lower stages of the terminal block.
[14]	**Output (Y) terminals**	Wire the intended loads (contactors, solenoid valves, etc.) to these terminals.
[15]	**Protective terminal covers**	A protective terminal cover (refer to the following drawing) is fitted to the lower stage of each terminal block to prevent fingers from touching terminals, thereby improving the safety. (FX2N-★★E□-ES(S)/UL, UA1/UL)



2. Side

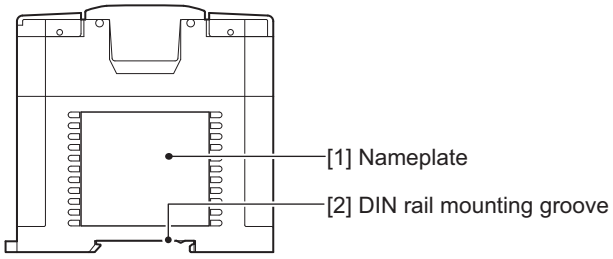

[1]	**Nameplate**	The product model name, control number and power supply specifications are shown.
[2]	**DIN rail mounting groove**	The unit can be installed on DIN46277 rail (35mm (1.38") wide).

15.3 FX2N-32ER-ES/UL, FX2N-48ER-ES/UL

15.3.1 Product specifications

The generic specifications are the same as those for the main unit.

→ **Refer to Section 4.1 for generic specifications.**

For external wiring, refer to the following chapters.

→ **Refer to Chapter 9 for power supply wiring.**
→ **Refer to Chapter 10 for input wiring.**
→ **Refer to Chapter 12 for output wiring.**

1. Power supply specifications

→ **For the power supply specifications, refer to Section 15.2.**

2. Input specifications (for sink input and source input)

Item		FX2N-32ER-ES/UL	FX2N-48ER-ES/UL
Input points		16 points	24 points
Connection type		Removable terminal block (M3 screw)	
Input form		sink/source	
Input signal voltage		24V DC ± 10%	
Input signal current		5mA/24V DC	
Input impedance		4.3 kΩ	
Input response time	Input ON current	3.5mA or more/24V DC	
	Input OFF current	1.5mA or less	
Input response time		Approx. 10ms	
Input signal form		No-voltage contact input Sink: NPN open collector transistor Source: PNP open collector transistor	
Input circuit insulation		Photo-coupler insulation	
Indication of input operation		LED on panel lights when input.	
Input circuit diagram		Sink input wiring / Source input wiring	

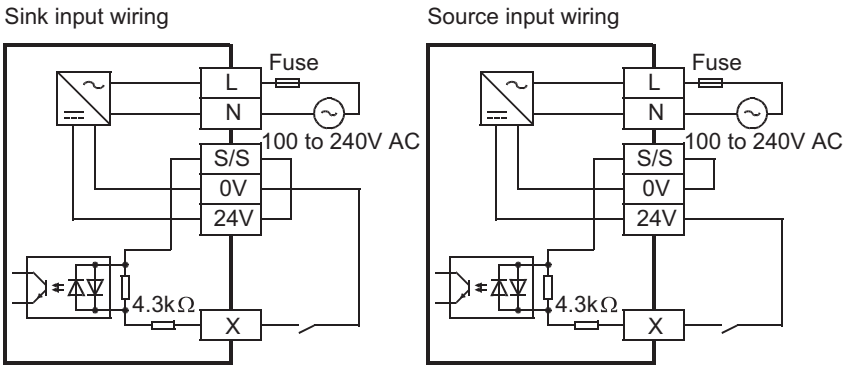

3. Output specifications (relay output type)

Item		FX2N-32ER-ES/UL	FX2N-48ER-ES/UL
Output Points		16 points	24 points
Connection type		Removable terminal block (M3 screw)	
Output unit		Relay	
External power supply		30V DC or less 240V AC or less (250V AC or less when the unit does not comply with CE, UL or cUL standards)	
Output circuit insulation		Mechanical insulation	
Indication of output operation		Supplying power to the relay coil will light the LED indicator lamp on panel.	
Max. load	Resistance load	2A/point The total load current per common terminal should be the following value. • 4 output points/common terminal: 8A or less	The total load current per common terminal should be the following value. • 4 output points/common terminal: 8A or less • 8 output points/common terminal: 8A or less
	Inductive load	80VA → **For the product life, refer to Subsection 14.4.3.** → **For cautions on external wiring, refer to Subsection 12.1.3.**	
Open circuit leakage current		-	
Min. load		5V DC, 2mA (reference value)	
Response time	OFF→ON	Approx. 10ms	
	ON→OFF	Approx. 10ms	
Output circuit configuration		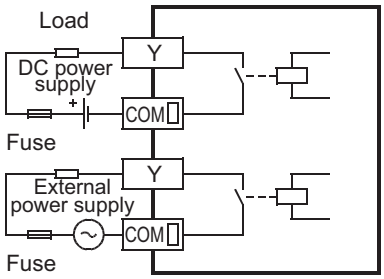 A common number applies to the □ of [COM□].	

15.3.2 External dimensions

FX2N-32ER-ES/UL

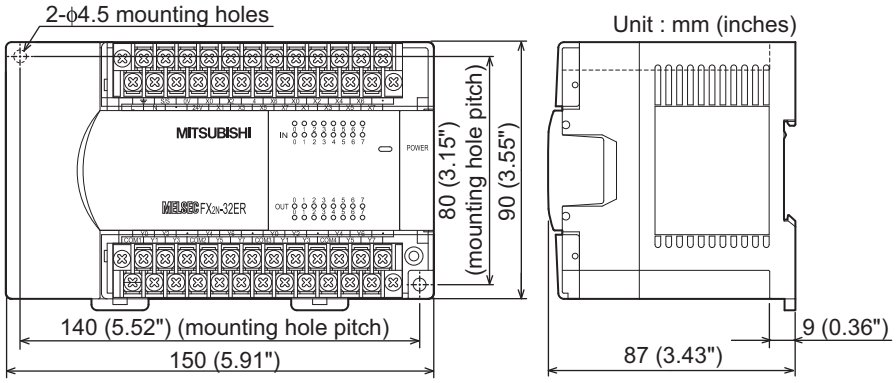

FX2N-48ER-ES/UL

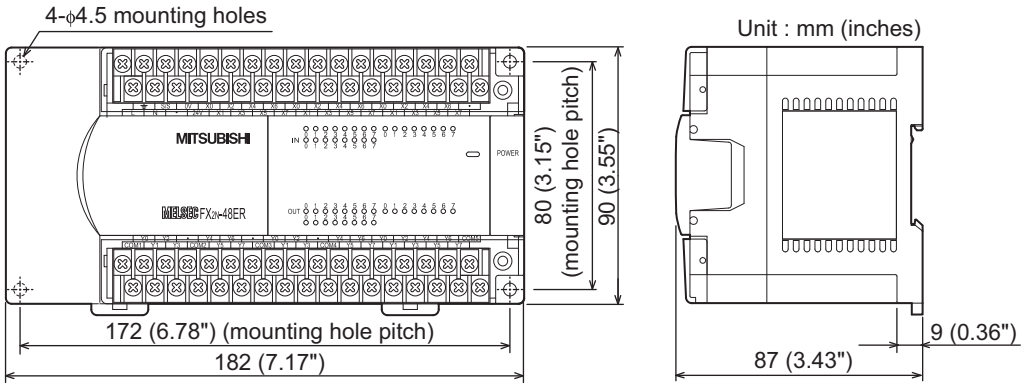

15.3.3 Terminal layout

FX2N-32ER-ES/UL

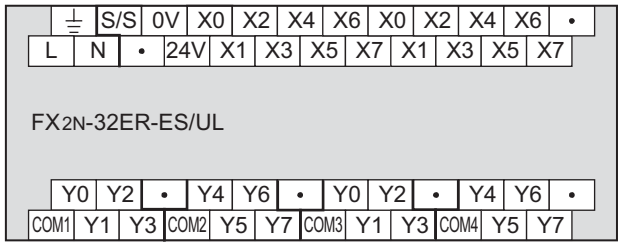

FX2N-48ER-ES/UL

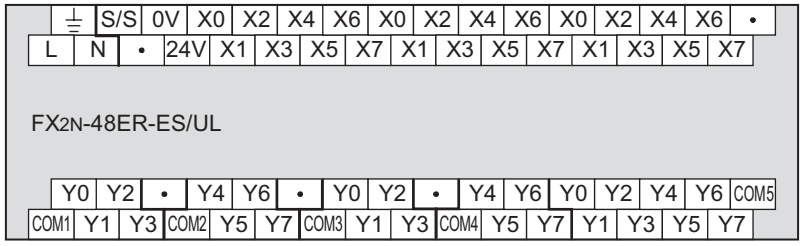

15.4 FX2N-32ET-ESS/UL, FX2N-48ET-ESS/UL

15.4.1 Product specifications

The generic specifications are the same as those for the main unit.

→ **Refer to Section 4.1 for generic specifications.**

For external wiring, refer to the following chapters.

→ **Refer to Chapter 9 for power supply wiring.**
→ **Refer to Chapter 10 for input wiring.**
→ **Refer to Chapter 12 for output wiring.**

1. Power supply specifications

→ **For the power supply specifications, refer to Section 15.2.**

2. Input specifications (for sink input and source input)

Item		FX2N-32ET-ESS/UL	FX2N-48ET-ESS/UL
Input points		16 points	24 points
Connection type		Removable terminal block (M3 screw)	
Input form		sink/source	
Input signal voltage		24V DC ± 10%	
Input signal current		5mA/24V DC	
Input impedance		4.3 kΩ	
Input response time	Input ON current	3.5mA or more/24V DC	
	Input OFF current	1.5mA or less	
Input response time		Approx. 10ms	
Input signal form		No-voltage contact input Sink: NPN open collector transistor Source: PNP open collector transistor	
Input circuit insulation		Photo-coupler insulation	
Indication of input operation		LED on panel lights when input.	
Input circuit diagram		Sink input wiring / Source input wiring	

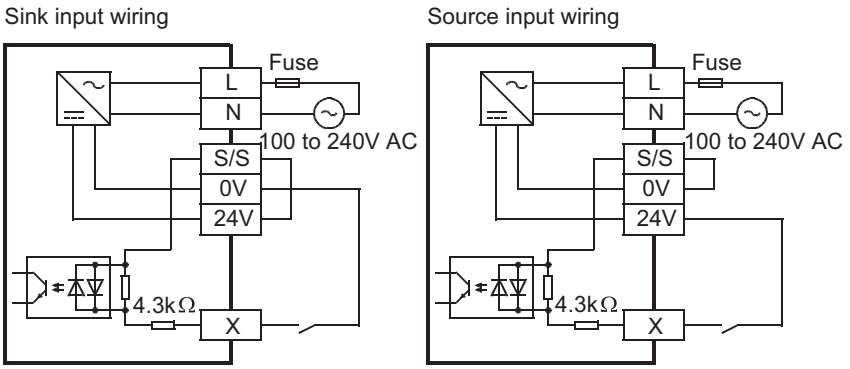

3. Output specifications (transistor output type)

Item		FX2N-32ET-ESS/UL	FX2N-48ET-ESS/UL
Output Points		16 points	24 points
Connection type		Removable terminal block (M3 screw)	
Output unit/type		Transistor/source output	
External power supply		5 to 30V DC	
Output circuit insulation		Photo-coupler insulation	
Indication of output operation		Activation of the photo-coupler will light the LED indicator lamp on panel.	
Max. load	Resistance load	0.5A/point The total load current per common terminal should be the following value. • 4 output points/common terminal: 0.8A or less	0.5A/point The total load current per common terminal should be the following value. • 4 output points/common terminal: 0.8A or less • 8 output points/common terminal: 1.6A or less
	Inductive load	12W/24V DC	
Open circuit leakage current		0.1mA/30V DC	
Min. load		-	
Response time	OFF→ON	0.2ms or less/200mA (at 24V DC)	
	ON→OFF	0.2ms or less/200mA (at 24V DC)	
Output circuit configuration		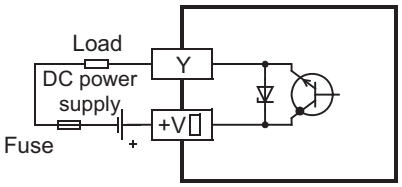 A common number applies to the □ of [+V□].	

15.4.2 External dimensions

FX2N-32ET-ESS/UL

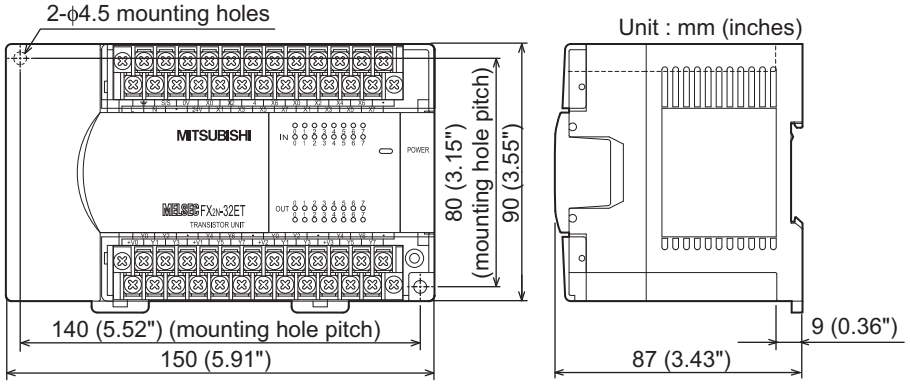

FX2N-48ET-ESS/UL

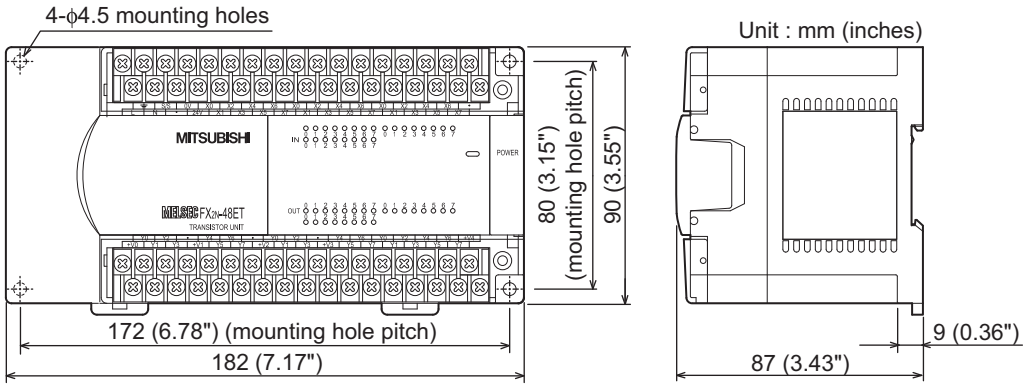

15.4.3 Terminal layout

FX2N-32ET-ESS/UL

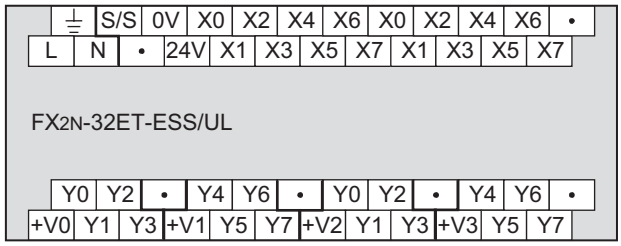

FX2N-48ET-ESS/UL

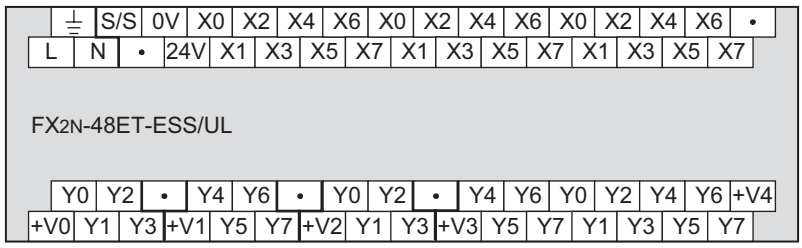

15.5 FX2N-32ER, FX2N-48ER

15.5.1 Product specifications

The generic specifications are the same as those for the main unit.

→ **Refer to Section 4.1 for generic specifications.**

For external wiring, refer to the following chapters.

→ **Refer to Chapter 9 for power supply wiring.**
→ **Refer to Chapter 10 for input wiring.**
→ **Refer to Chapter 12 for output wiring.**

1. Power supply specifications

→ **For the power supply specifications, refer to Section 15.2.**

2. Input specifications (sink input)

Item		FX2N-32ER	FX2N-48ER
Input points		16 points	24 points
Connection type		Removable terminal block (M3 screw)	
Input form		sink	
Input signal voltage		24V DC ±10%	
Input signal current		5mA/24V DC	
Input impedance		4.3 kΩ	
Input response time	Input ON current	3.5mA or more/24V DC	
	Input OFF current	1.5mA or less	
Input response time		Approx. 10ms	
Input signal form		No-voltage contact input NPN open collector transistor	
Input circuit insulation		Photo-coupler insulation	
Indication of input operation		LED on panel lights when input.	
Input circuit diagram		Sink input wiring 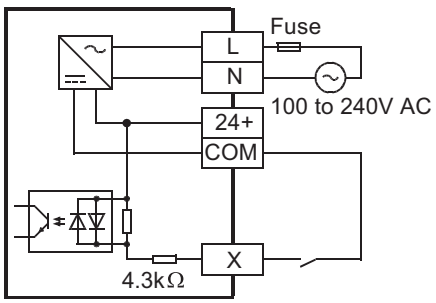	

3. Output specifications (relay output type)

Item		FX2N-32ER	FX2N-48ER
Output Points		16 points	24 points
Connection type		Removable terminal block (M3 screw)	
Output unit		Relay	
External power supply		250V AC/30V DC or less	
Output circuit insulation		Mechanical insulation	
Indication of output operation		When power is applied to relay coil, LED is lit.	
Max. load	Resistance load	2A/point The total load current per common terminal should be the following value. • 8 output points/common terminal: 8A or less	2A/point The total load current per common terminal should be the following value. • 4 output points/common terminal: 8A or less • 8 output points/common terminal: 8A or less
	Inductive load	80VA → **For the product life, refer to Subsection 14.4.3.** → **For cautions on external wiring, refer to Subsection 12.1.3.**	
Open circuit leakage current		-	
Min. load		5V DC, 2mA (reference value)	
Response time	OFF→ON	Approx. 10ms	
	ON→OFF	Approx. 10ms	
Output circuit configuration		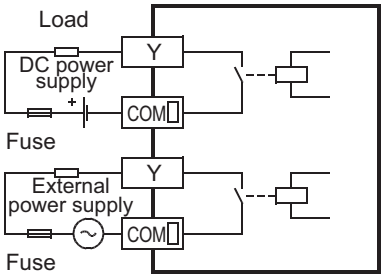 A common number applies to the□of [COM□].	

15.5.2 External dimensions

FX2N-32ER

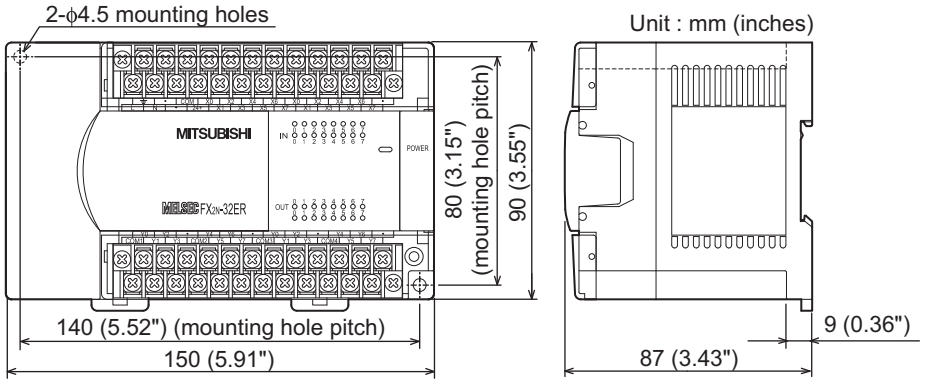

FX2N-48ER

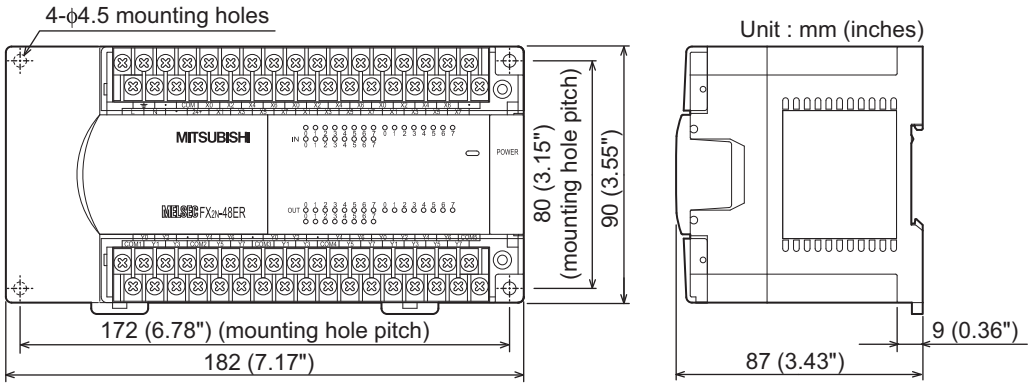

15.5.3 Terminal layout

FX2N-32ER

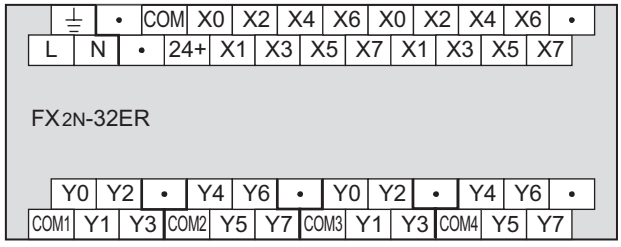

FX2N-48ER

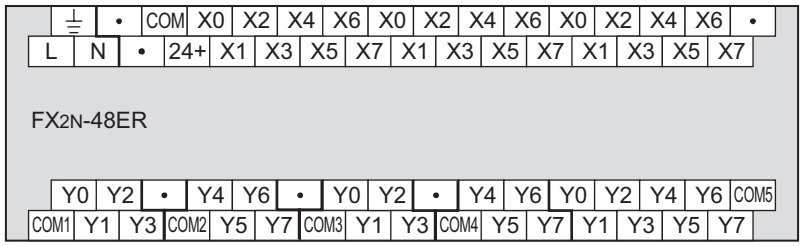

15.6 FX2N-32ET, FX2N-48ET

15.6.1 Product specifications

The generic specifications are the same as those for the main unit.

→ **Refer to Section 4.1 for generic specifications.**

For external wiring, refer to the following chapters.

→ **Refer to Chapter 9 for power supply wiring.**
→ **Refer to Chapter 10 for input wiring.**
→ **Refer to Chapter 12 for output wiring.**

1. Power supply specifications

→ **For the power supply specifications, refer to Section 15.2.**

2. Input specifications (sink input)

Item		FX2N-32ET	FX2N-48ET
Input points		16 points	24 points
Connection type		Removable terminal block (M3 screw)	
Input form		sink	
Input signal voltage		24V DC ±10%	
Input signal current		5mA/24V DC	
Input impedance		4.3 kΩ	
Input response time	Input ON current	3.5mA or more/24V DC	
	Input OFF current	1.5mA or less	
Input response time		Approx. 10ms	
Input signal form		No-voltage contact input NPN open collector transistor	
Input circuit insulation		Photo-coupler insulation	
Indication of input operation		LED on panel lights when input.	
Input circuit diagram		Sink input wiring 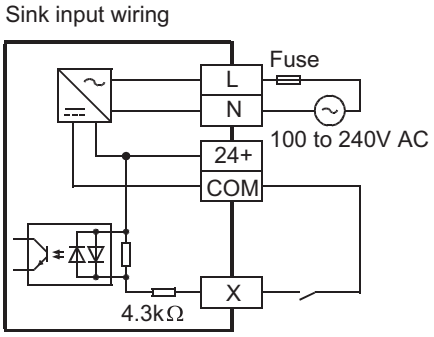	

3. Output specifications (transistor output type)

Item		FX2N-32ET	FX2N-48ET
Output Points		16 points	24 points
Connection type		Removable terminal block (M3 screw)	
Output unit/type		Transistor/sink output	
External power supply		5 to 30V DC	
Output circuit insulation		Photo-coupler insulation	
Indication of output operation		Activation of the photo-coupler will light the LED indicator lamp on panel.	
Max. load	Resistance load	0.5A/point The total load current per common terminal should be the following value. • 8 output points/common terminal: 1.6A or less	0.5A/point The total load current per common terminal should be the following value. • 4 output points/common terminal: 0.8A or less • 8 output points/common terminal: 1.6A or less
	Inductive load	12W/24V DC	
Open circuit leakage current		0.1mA/30V DC	
Min. load		-	
Response time	OFF→ON	0.2ms or less/200mA (at 24V DC)	
	ON→OFF	0.2ms or less/200mA (at 24V DC)	
Output circuit configuration		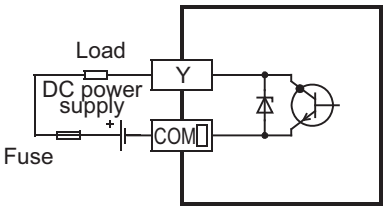 A common number applies to the □ of [COM□].	

15.6.2 External dimensions

FX2N-32ET

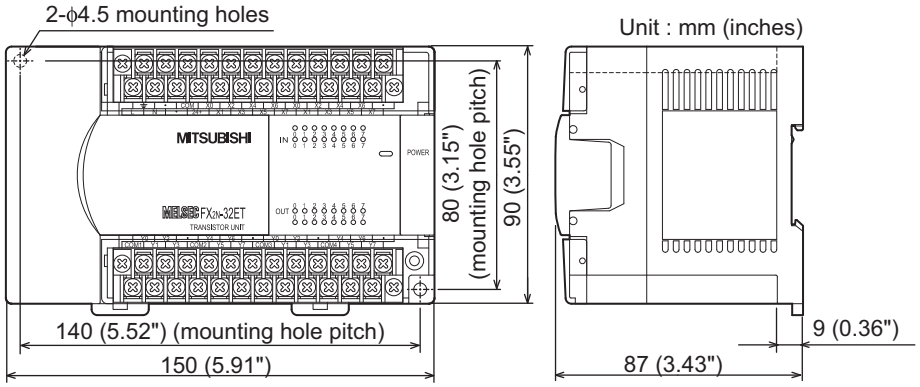

FX2N-48ET

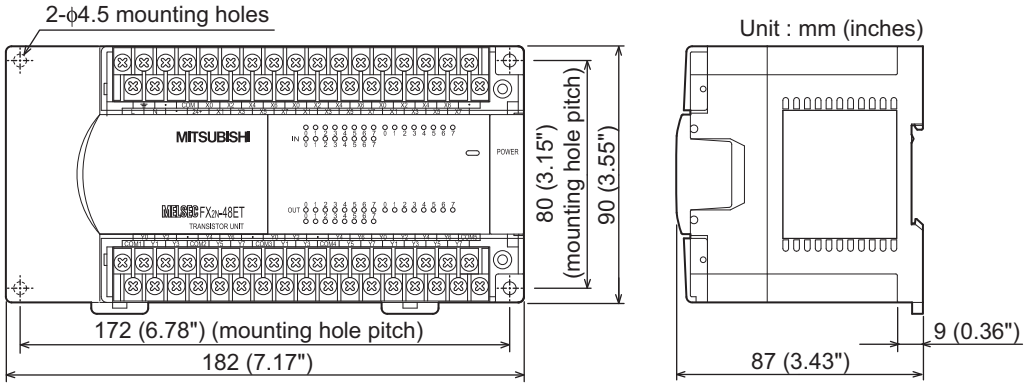

15.6.3 Terminal layout

FX2N-32ET

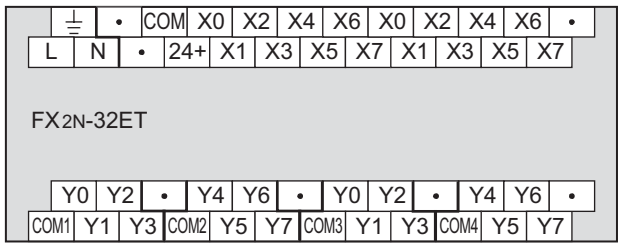

FX2N-48ET

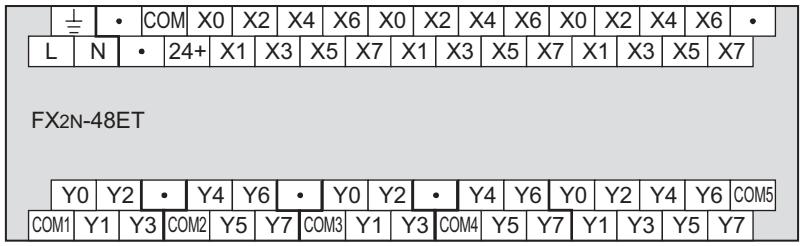

15.7 FX2N-32ES

15.7.1 Product specifications

The generic specifications are the same as those for the main unit.

→ **Refer to Section 4.1 for generic specifications.**

For external wiring, refer to the following chapters.

→ **Refer to Chapter 9 for power supply wiring.**
→ **Refer to Chapter 10 for input wiring.**
→ **Refer to Chapter 12 for output wiring.**

1. Power supply specifications

→ **For the power supply specifications, refer to Section 15.2.**

2. Input specifications (sink input)

Item		FX2N-32ES
Input points		16 points
Connection type		Removable terminal block (M3 screw)
Input form		sink
Input signal voltage		24V DC ±10%
Input signal current		5mA/24V DC
Input impedance		4.3 kΩ
Input response time	Input ON current	3.5mA or more/24V DC
	Input OFF current	1.5mA or less
Input response time		Approx. 10ms
Input signal form		No-voltage contact input NPN open collector transistor
Input circuit insulation		Photo-coupler insulation
Indication of input operation		LED on panel lights when input.
Input circuit diagram		Sink input wiring 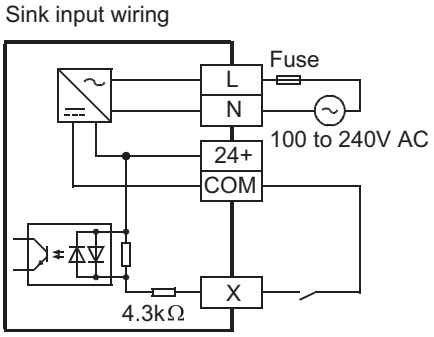

3. Output specifications (triac output type)

Item		FX2N-32ES
Output Points		16 points
Connection type		Removable terminal block (M3 screw)
Output unit		Triac output (SSR)
External power supply		85 to 242V AC
Output circuit insulation		Photo-thyristor insulation
Indication of output operation		Activation of the photo-thyristor will light the LED indicator lamp on panel.
Max. load	Resistance load	0.3A/point The total load current per common terminal should be the following value. • 4 output points/common terminal: 0.8A or less
	Inductive load	15VA/100V AC, 30VA/200V AC
Open circuit leakage current		1mA/100V AC, 2mA/200V AC
Min. load		0.4VA/100V AC, 1.6VA/200V AC
Response time	OFF→ON	1ms or less
	ON→OFF	10ms or less
Output circuit configuration		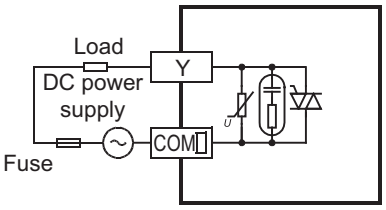 A common number applies to the □ of [COM□].

15.7.2 External dimensions

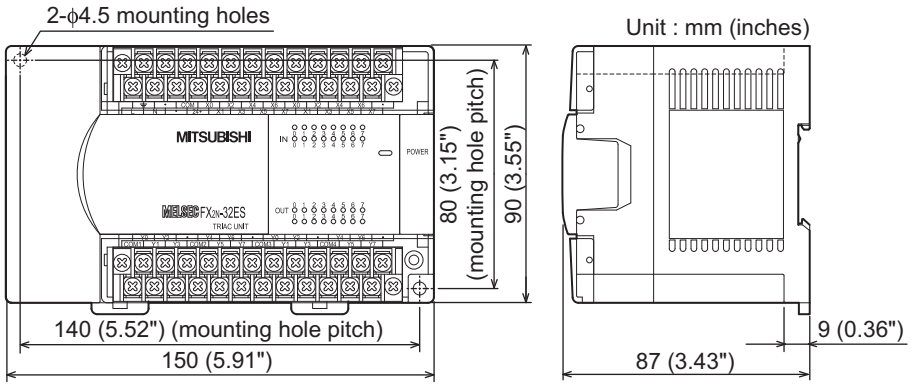

15.7.3 Terminal layout

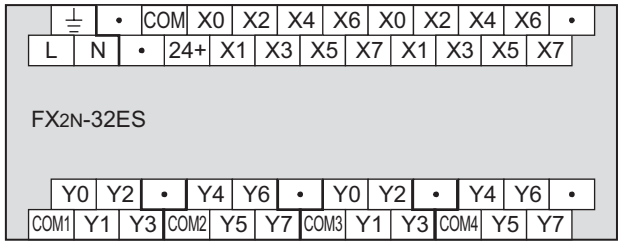

15.8 FX2N-48ER-UA1/UL

15.8.1 Product specifications

The generic specifications are the same as those for the main unit.

→ **Refer to Section 4.1 for generic specifications.**

For external wiring, refer to the following chapters.

→ **Refer to Chapter 9 for power supply wiring.**
→ **Refer to Chapter 10 for input wiring.**
→ **Refer to Chapter 12 for output wiring.**

1. Power supply specifications

→ **For the power supply specifications, refer to Section 15.2.**

2. Input specifications (100V AC Input)

Item		FX2N-48ER-UA1/UL
Input points		24 points
Connection type		Removable terminal block (M3 screw)
Input form		AC input
Input signal voltage		100 to 120V AC +10%,-15% 50/60 Hz
Input signal current		4.7 mA/100V AC 50 Hz (70% or less when turned on simultaneously) 6.2 mA/110V AC 60 Hz (70% or less when turned on simultaneously)
Input impedance		Approx. 21 kΩ/50 Hz Approx. 18 kΩ/60 Hz
Input response time	Input ON current	3.8mA or more/80V AC
	Input OFF current	1.7mA or less/30V AC
Input response time		Approx. 25 to 30ms
Input signal form		Contact input
Input circuit insulation		Photo-coupler insulation
Indication of input operation		LED on panel lights when input.
Input circuit diagram		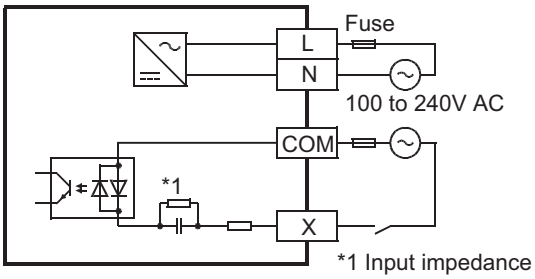

3. Output specifications (relay output type)

Item		FX2N-48ER-UA1/UL
Output Points		24 points
Connection type		Removable terminal block (M3 screw)
Output unit		Relay
External power supply		30V DC or less 240V AC or less (250V AC or less when the unit does not comply with CE, UL or cUL standards)
Output circuit insulation		Mechanical insulation
Indication of output operation		Supplying power to the relay coil will light the LED indicator lamp on panel.
Max. load	Resistance load	2A/point The total load current of resistance loads per common terminal should be the following value. • 4 output points/common terminal: 8A or less • 8 output points/common terminal: 8A or less
	Inductive load	80VA → **For the product life, refer to Subsection 14.4.3.** → **For cautions on external wiring, refer to Subsection 12.1.2.**
Open circuit leakage current		-
Min. load		5V DC, 2mA (reference value)
Response time	OFF→ON	Approx. 10ms
	ON→OFF	Approx. 10ms
Output circuit configuration		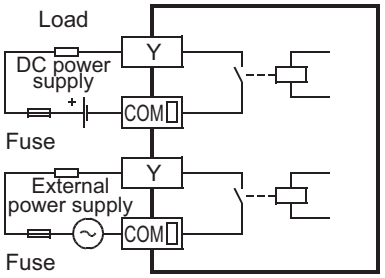 A common number applies to the□ of [COM□].

15.8.2 External dimensions

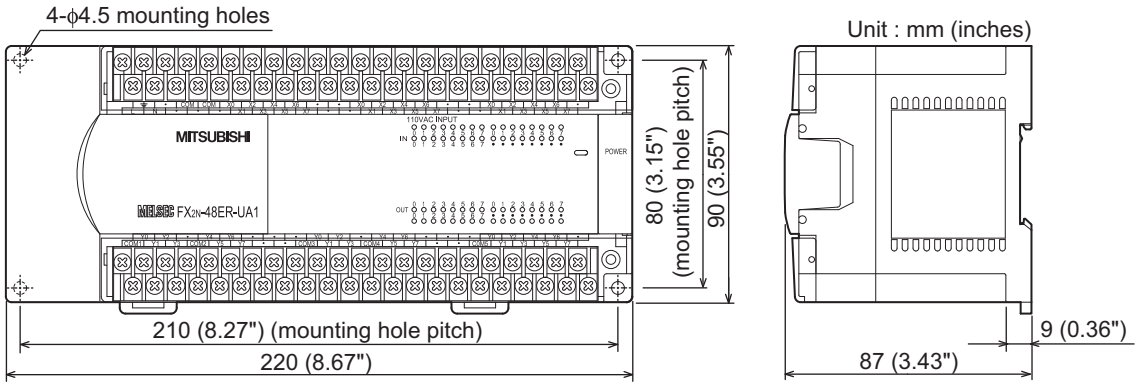

15.8.3 Terminal layout

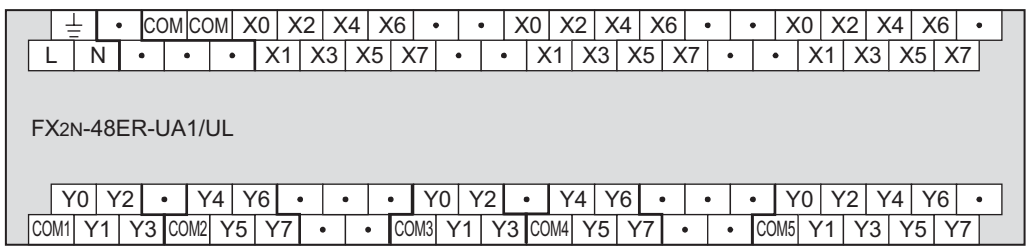

16. Input/Output Extension Blocks

DESIGN PRECAUTIONS **DANGER**

- Make sure to have the following safety circuits outside of the PLC to ensure safe system operation even during external power supply problems or PLC failure.
  Otherwise, malfunctions may cause serious accidents.
  1) Most importantly, have the following: an emergency stop circuit, a protection circuit, an interlock circuit for opposite movements (such as normal vs. reverse rotation), and an interlock circuit (to prevent damage to the equipment at the upper and lower positioning limits).
  2) Note that when the PLC CPU detects an error, such as a watchdog timer error, during self-diagnosis, all outputs are turned off. Also, when an error that cannot be detected by the PLC CPU occurs in an input/output control block, output control may be disabled.
     External circuits and mechanisms should be designed to ensure safe machinery operation in such a case.
  3) Note that when the PLC CPU detects an error, such as a watchdog timer error, during self-diagnosis, all outputs are turned off. Also, when an error that cannot be detected by the PLC CPU occurs in an input/output control block, output control may be disabled.
     External circuits and mechanisms should be designed to ensure safe machinery operation in such a case.
  4) Note that when an error occurs in a relay, triac or transistor output device, the output could be held either on or off.
     For output signals that may lead to serious accidents, external circuits and mechanisms should be designed to ensure safe machinery operation in such a case.

DESIGN PRECAUTIONS **CAUTION**

- Do not bundle the control line together with or lay it close to the main circuit or power line. As a guideline, lay the control line at least 100mm (3.94") or more away from the main circuit or power line.
  Noise may cause malfunctions.

WIRING PRECAUTIONS **DANGER**

- Connect the AC power supply to the dedicated terminals specified in this manual.
  If an AC power supply is connected to a DC input/output terminal or DC power supply terminal, the PLC will burn out.
- Make sure to cut off all phases of the power supply externally before attempting installation or wiring work.
  Failure to do so may cause electric shock or damage to the product.
- Make sure to attach the terminal cover, offered as an accessory, before turning on the power or initiating operation after installation or wiring work.
  Failure to do so may cause electric shock.

WIRING PRECAUTIONS **CAUTION**

- Connect the DC power supply to the dedicated terminals specified in this manual.
  If an AC power supply is connected to a DC input/output terminal or DC power supply terminal, the PLC will burn out.
- Do not wire vacant terminals externally.
  Doing so may damage the product.
- When drilling screw holes or wiring, make sure cutting or wire debris does not enter the ventilation slits.
  Failure to do so may cause fire, equipment failures or malfunctions.
- Make sure to properly wire the FX2N/FX3U Series extension equipment in accordance with the following precautions.
  Failure to do so may cause electric shock, a short-circuit, wire breakage, or damage to the product.
  - The disposal size of the cable end should follow the dimensions described in this manual.
  - Tightening torque should be between 0.5 and 0.8 N•m.

16.1 Outline

Connect input/output extension blocks to the PLC to add more input/output points. 8 or 16 points can be added by an input/output extension block.
Since the power is supplied from the main unit, it is not necessary to prepare another power supply unit for each input/output extension block.

16.1.1 Product configuration

There are various types of input/output extension blocks. Select optimum blocks considering the input type, output type, and connection unit of your system.

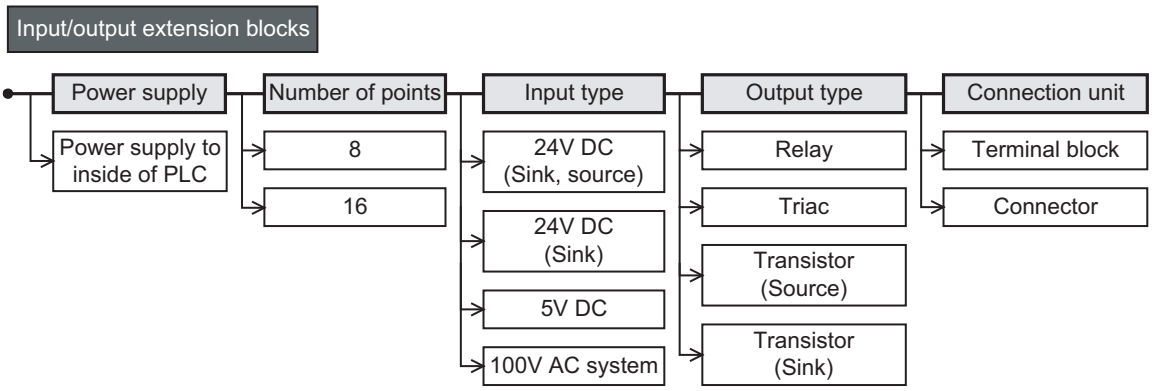

16.1.2 Product list

1. For input/output extension

Sink :Sink [-common], Source :Source [+common]

Model	Input			Output			Connection type
	Type	Number of points	Common system	Type	Number of points	Common system	
Common to both sink and source inputs							
FX2N-8ER-ES/UL	24V DC	4(8)*1	Sink Source	Relay	4(8)*1	-	Terminal block
Dedicated to sink input only							
FX2N-8ER	24V DC	4(8)*1	Sink	Relay	4(8)*1	-	Terminal block

*1. Four inputs and four outputs are occupied as unused numbers.

2. For input extension

Sink :Sink [-common], Source :Source [+common]

Model	Input			Output			Connection type
	Type	Number of points	Common system	Type	Number of points	Common system	
Common to both sink and source inputs							
FX2N-8EX-ES/UL	24V DC	8	Sink Source	-	-	-	Terminal block
FX2N-16EX-ES/UL	24V DC	16	Sink Source	-	-	-	Terminal block
Dedicated to sink input only							
FX2N-8EX	24V DC	8	Sink	-	-	-	Terminal block
FX2N-16EX	24V DC	16	Sink	-	-	-	Terminal block
FX2N-16EX-C	24V DC	16	Sink	-	-	-	Connector
FX2N-16EXL-C	5V DC	16	Sink	-	-	-	Connector
100V AC input type							
FX2N-8EX-UA1/UL	100V AC	8	-	-	-	-	Terminal block

3. For output extension

Sink :Sink [-common], Source :Source [+common]

Model	Input			Output			Connection type
	Type	Number of points	Common system	Type	Number of points	Common system	
Relay output type							
FX2N-8EYR-ES/UL	-	-	-	Relay	8	-	Terminal block
FX2N-8EYR	-	-	-	Relay	8	-	Terminal block
FX2N-16EYR-ES/UL	-	-	-	Relay	16	-	Terminal block
FX2N-16EYR	-	-	-	Relay	16	-	Terminal block
Dedicated to sink output only							
FX2N-8EYT	-	-	-	Transistor	8	Sink	Terminal block
FX2N-8EYT-H	-	-	-	Transistor	8	Sink	Terminal block
FX2N-16EYT	-	-	-	Transistor	16	Sink	Terminal block
FX2N-16EYT-C	-	-	-	Transistor	16	Sink	Connector
FX2N-16EYS	-	-	-	Transistor	16	-	Terminal block
Dedicated to source output only							
FX2N-8EYT-ESS/UL	-	-	-	Transistor	8	Source	Terminal block
FX2N-16EYT-ESS/UL	-	-	-	Transistor	16	Source	Terminal block

16.2 FX2N-8ER-ES/UL (24V DC Sink/Source Input, Relay Output)

16.2.1 Product specifications

The generic specifications are identical to the main unit specifications.

→ **Refer to Section 4.1 for generic specifications.**

For external wiring, refer to the following chapters.

→ **Refer to Chapter 10 for input wiring.**
→ **Refer to Chapter 12 for output wiring.**

1. Power supply specifications

Item	FX2N-8ER-ES/UL
Product type	FX2N extension block
Rated voltage	24V DC (supplied from main unit and input/output powered extension unit)

2. Weight and Other specifications (External dimensions are described later.)

Item	FX2N-8ER-ES/UL
MASS (Weight)	0.2kg (0.44lbs)
Other	• The extension cable is already connected to the extension block. • Accessories: Label for indication of input/output number • The DIN46277 rail (width: 35 mm (1.38")) or direct installation.

3. Input specifications (common to both sink and source inputs)

Item		FX2N-8ER-ES/UL
Input points		4 points
Connection type		Vertical terminal block (M3 screws)
Input form		sink/source
Input signal voltage		24V DC ± 10%
Input signal current		5mA/24V DC
Input impedance		4.3kΩ
ON input sensitivity current	Input ON current	3.5mA or more at 24V DC
	Input OFF current	1.5mA or less
Input response time		Approx. 10ms
Input signal form		Sink input: No-voltage contact input, NPN open collector transistor Source input: No-voltage contact input, PNP open collector transistor
Input circuit insulation		Photo-coupler insulation
Indication of input operation		LED on panel lights when input.
Input circuit diagram		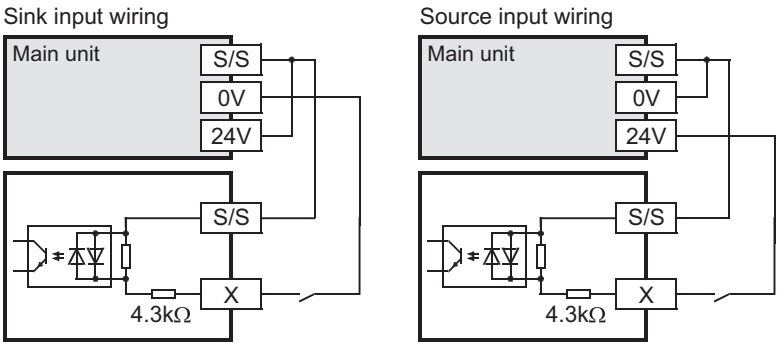

4. Output specifications (Relay output type)

Item		FX2N-8ER-ES/UL
Output Points		4 points
Connection type		Vertical terminal block (M3 screws)
Output type		Relay
External power supply		30V DC or less 240V AC or less (250V AC or less when the unit does not comply with CE, UL or cUL standards)
Output circuit insulation		Mechanical insulation
Indication of output operation		Supplying power to the relay coil will light the LED indicator lamp on panel.
Max. load	Resistance load	2A/point The total resistance load current per common should be as follows: • 4 output points/common: 8A or less
	Inductive load	80VA → **For the product life, refer to Subsection 14.4.3.** → **For cautions on external wiring, refer to Subsection 12.1.3.**
Open circuit leakage current		-
Min. load		5V DC, 2mA (reference values)
Response time	OFF→ON	Approx. 10ms
	ON→OFF	Approx. 10ms
Output circuit configuration		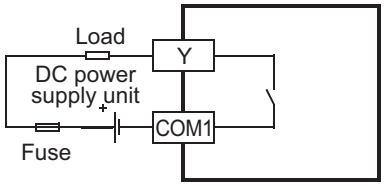

16.2.2 Parts identification and terminal arrangement

Input numbers (X) are assigned to the upper four points, and output numbers (Y) are assigned to the lower four points.

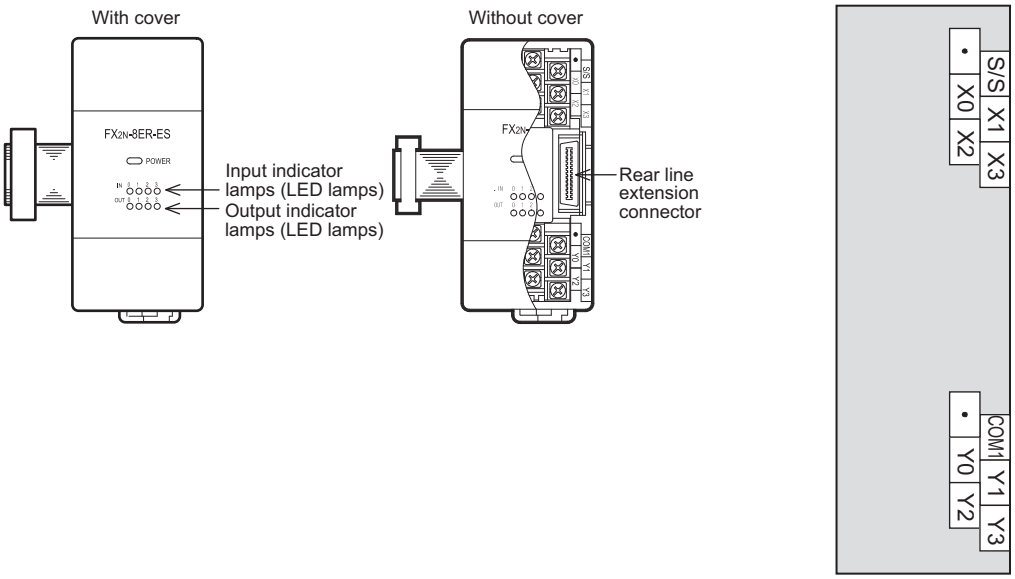

16.2.3 External dimensions

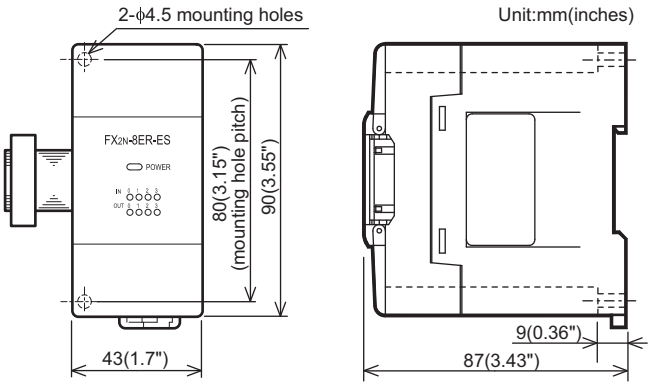

16.3 FX2N-8ER (24V DC Sink Input, Relay Output)

16.3.1 Product specifications

The generic specifications are identical to the main unit specifications.

→ **Refer to Section 4.1 for generic specifications.**

For external wiring, refer to the following chapters.

→ **Refer to Chapter 10 for input wiring.**
→ **Refer to Chapter 12 for output wiring.**

1. Power supply specifications

Item	FX2N-8ER
Product type	FX2N extension block
Rated voltage	24V DC (supplied from main unit and input/output powered extension unit)

2. Weight and Other specifications (External dimensions are described later.)

Item	FX2N-8ER
MASS (Weight)	0.2kg (0.44lbs)
Other	• The extension cable is already connected to the extension block. • Accessories: Label for indication of input/output number • The DIN46277 rail (width: 35 mm (1.38")) or direct installation.

3. Input specifications

Item		FX2N-8ER
Input points		4 points
Connection type		Vertical terminal block (M3 screws)
Input form		Sink
Input signal voltage		24V DC ± 10%
Input signal current		5mA/24V DC
Input impedance		4.3kΩ
ON input sensitivity current	Input ON current	3.5mA or more at 24V DC
	Input OFF current	1.5mA or less
Input response time		Approx. 10ms
Input signal form		No-voltage contact input NPN open collector transistor
Input circuit insulation		Photo-coupler insulation
Indication of input operation		LED on panel lights when input.
Input circuit diagram		Sink input wiring 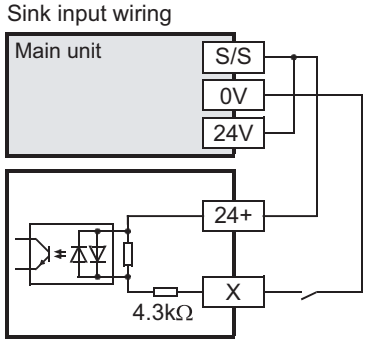

4. Output specifications (Relay output type)

Item		FX2N-8ER
Output Points		4 points
Connection type		Vertical terminal block (M3 screws)
Output type		Relay
External power supply		30V DC or less 240V AC or less (250V AC or less when the unit does not comply with CE, UL or cUL standards)
Output circuit insulation		Mechanical insulation
Indication of output operation		Supplying power to the relay coil will light the LED indicator lamp on panel.
Max. load	Resistance load	2A/point The total resistance load current per common should be as follows: • 4 output points/common: 8A or less
	Inductive load	80VA → **For the product life, refer to Subsection 14.4.3.** → **For cautions on external wiring, refer to Subsection 12.1.3.**
Open circuit leakage current		-
Min. load		5V DC, 2mA (reference values)
Response time	OFF→ON	Approx. 10ms
	ON→OFF	Approx. 10ms
Output circuit configuration		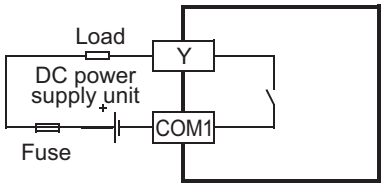

16.3.2 Parts identification and terminal arrangement

Input numbers (X) are assigned to the upper four points, and output numbers (Y) are assigned to the lower four points.

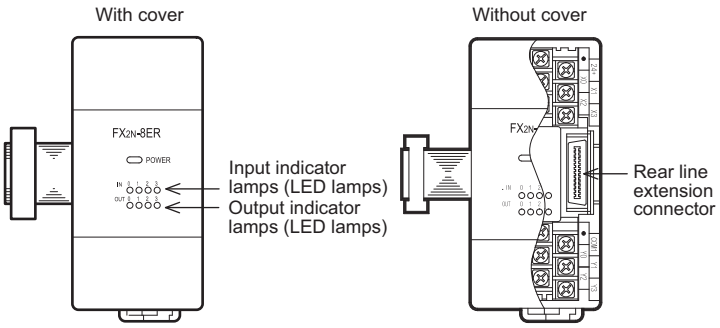

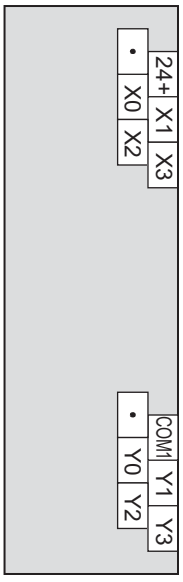

16.3.3 External dimensions

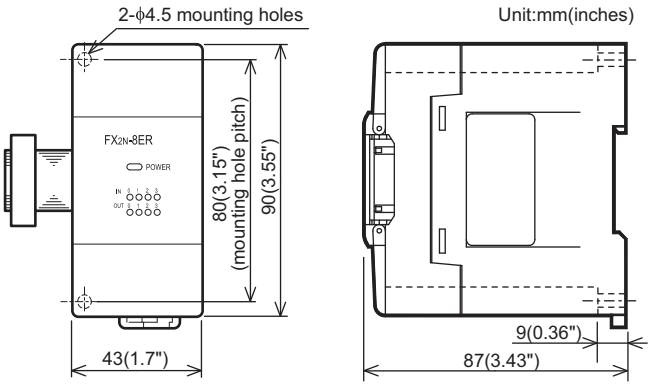

16.4 FX2N-8EX-ES/UL, FX2N-16EX-ES/UL (24V DC Sink/Source Input)

16.4.1 Product specifications

The generic specifications are identical to the main unit specifications.

→ **Refer to Section 4.1 for generic specifications.**

For external wiring, refer to the following chapters.

→ **Refer to Chapter 10 for input wiring.**

1. Power supply specifications

Item	FX2N-8EX-ES/UL	FX2N-16EX-ES/UL
Product type	FX2N extension block	
Rated voltage	24V DC (supplied from main unit and input/output powered extension unit)	

2. Weight and Other specifications (External dimensions are described later.)

Item	FX2N-8EX-ES/UL	FX2N-16EX-ES/UL
MASS (Weight)	0.2kg (0.44lbs)	0.3kg (0.66lbs)
Other	• The extension cable is already connected to the extension block. • Accessories: Label for indication of input/output number • The DIN46277 rail (width: 35 mm (1.38")) or direct installation.	

3. Input specifications (common to both sink and source inputs)

Item		FX2N-8EX-ES/UL	FX2N-16EX-ES/UL
Input points		8 points	16 points
Connection type		Vertical terminal block (M3 screws)	
Input form		sink/source	
Input signal voltage		24V DC ± 10%	
Input signal current		5mA/24V DC	
Input impedance		4.3kΩ	
ON input sensitivity current	Input ON current	3.5mA or more at 24V DC	
	Input OFF current	1.5mA or less	
Input response time		Approx. 10ms	
Input signal form		Sink input: No-voltage contact input, NPN open collector transistor Source input: No-voltage contact input, PNP open collector transistor	
Input circuit insulation		Photo-coupler insulation	
Indication of input operation		LED on panel lights when input.	
Input circuit diagram		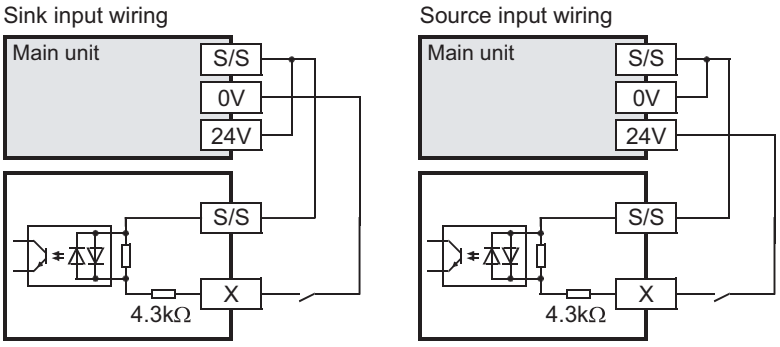	

16.4.2 Parts identification and terminal arrangement

FX2N-8EX-ES/UL

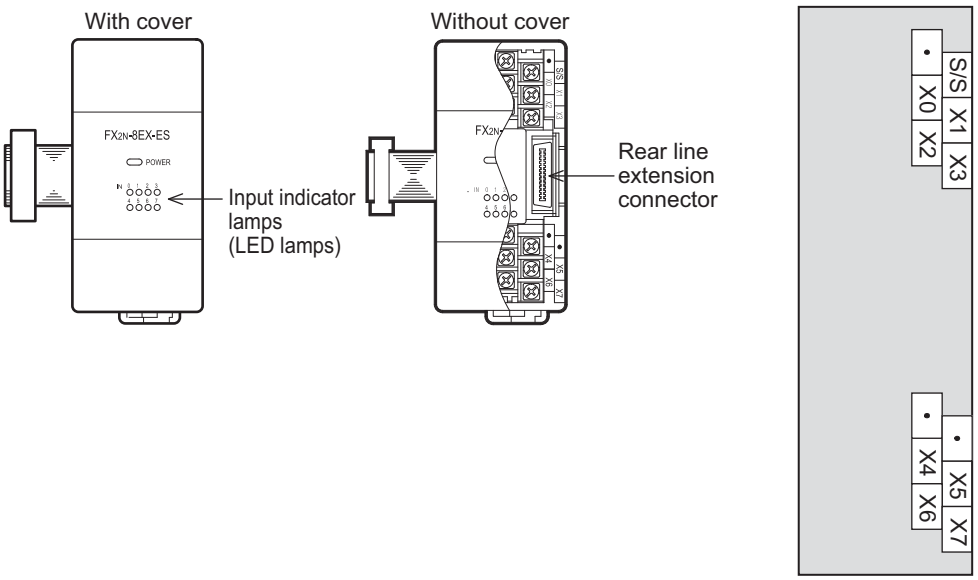

FX2N-16EX-ES/UL

When an input (X) number is assigned, 8 points on the upper side will be used for the lower input numbers, and 8 points on the lower side will be used for the higher input numbers.

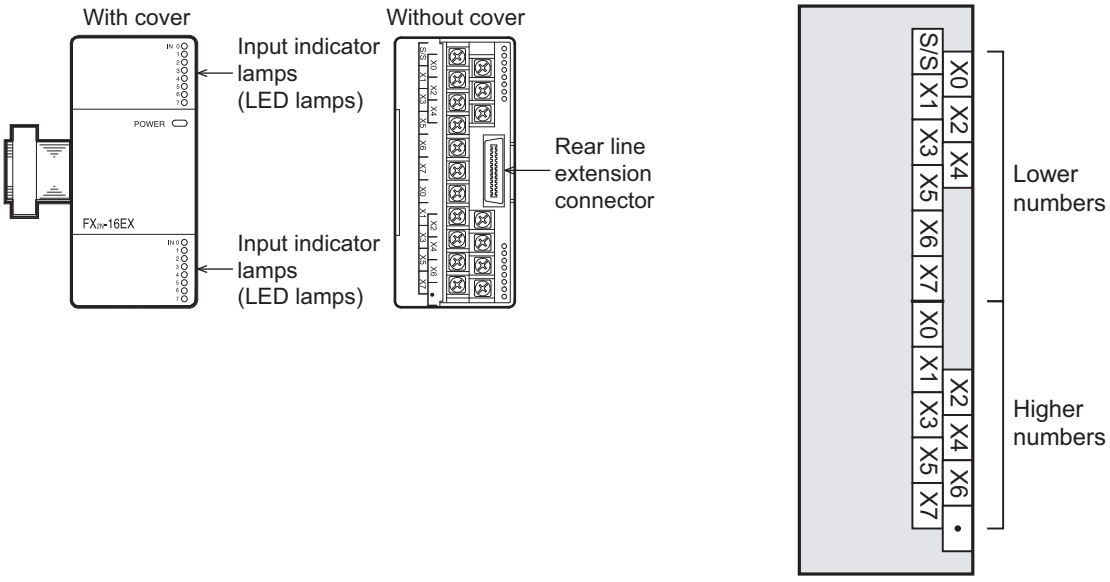

16.4.3 External dimensions

FX2N-8EX-ES/UL

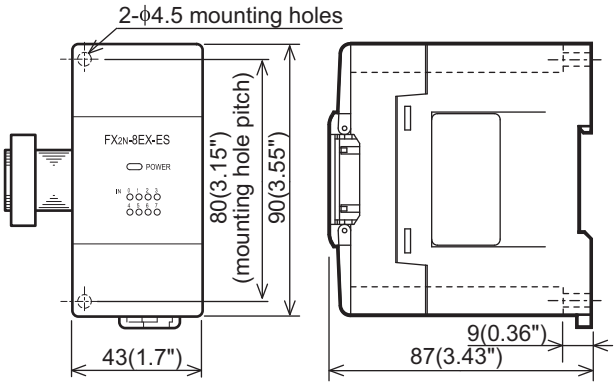

Unit:mm (inches)

FX2N-16EX-ES/UL

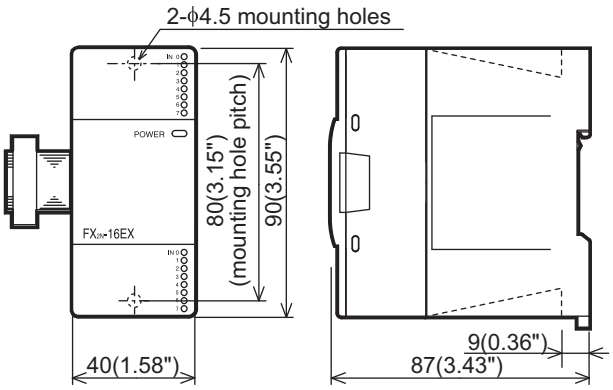

Unit:mm (inches)

16.5 FX2N-8EX, FX2N-16EX and FX2N-16EX-C

16.5.1 Product specifications

The generic specifications are identical to the main unit specifications.

→ **Refer to Section 4.1 for generic specifications.**

For external wiring, refer to the following chapters.

→ **Refer to Chapter 10 for input wiring.**

1. Power supply specifications

Item	FX2N-8EX	FX2N-16EX	FX2N-16EX-C
Product type	FX2N extension block		FX2N connector type extension block
Rated voltage	24V DC (supplied from main unit and input/output powered extension unit)		

2. Weight and Other specifications (External dimensions are described later.)

Item	FX2N-8EX	FX2N-16EX	FX2N-16EX-C
MASS (Weight)	0.2kg (0.44lbs)	0.3kg (0.66lbs)	
Other	• The extension cable is already connected to the extension block. • Accessories: Label for indication of input/output number • The DIN46277 rail (width: 35 mm (1.38")) or direct installation.		

3. Input specifications

Item		FX2N-8EX	FX2N-16EX	FX2N-16EX-C
Input points		8 points	16 points	
Connection type		Vertical terminal block (M3 screws)		FX2N connector type extension block
Input form		Sink		
Input signal voltage		24V DC ± 10%		
Input signal current		5mA/24V DC		
Input impedance		4.3kΩ		
ON input sensitivity current	Input ON current	3.5mA or more at 24V DC		
	Input OFF current	1.5mA or less		
Input response time		Approx. 10ms		
Input signal form		No-voltage contact input NPN open collector transistor		
Input circuit insulation		Photo-coupler insulation		
Indication of input operation		LED on panel lights when input.		
Input circuit diagram		Sink input wiring 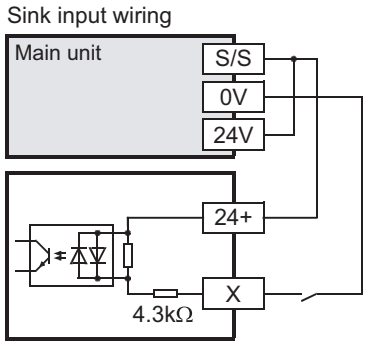		

16.5.2 Parts identification and terminal arrangement

FX2N-8EX

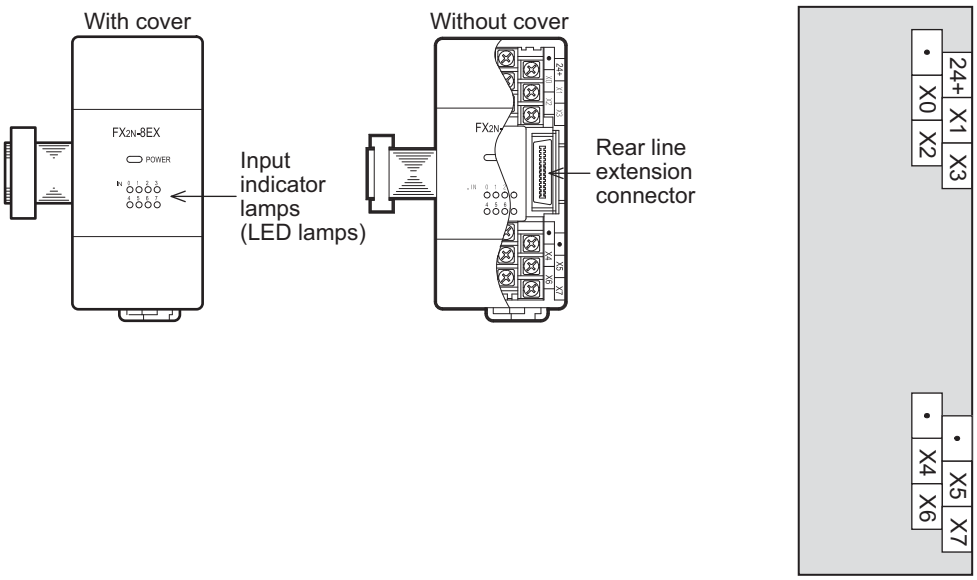

FX2N-16EX

When an input (X) number is assigned, 8 points on the upper side will be used for the lower input numbers, and 8 points on the lower side will be used for the higher input numbers.

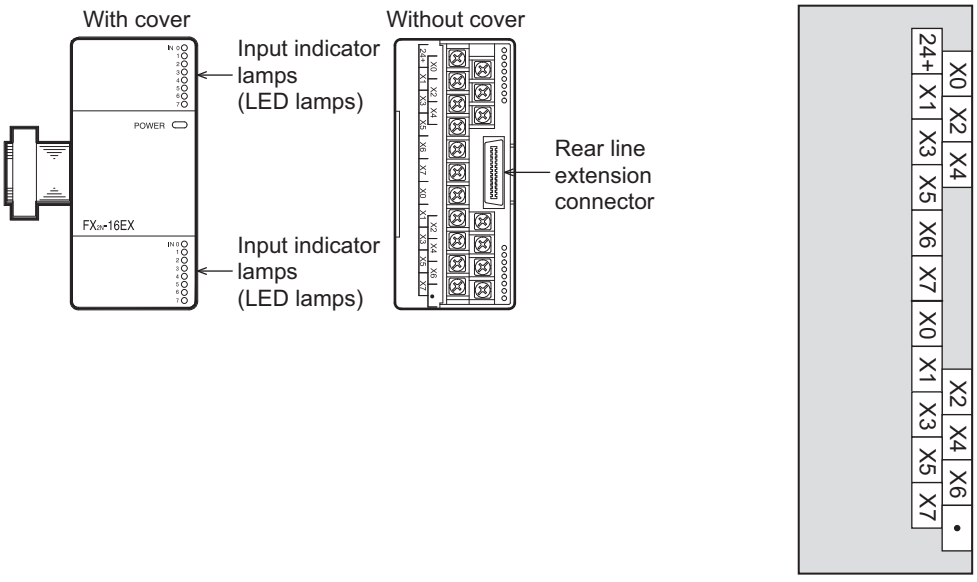

FX2N-16EX-C

When an input (X) number is assigned, 8 points on side A will be used for the lower input numbers, and 8 points on side B will be used for the higher input numbers.

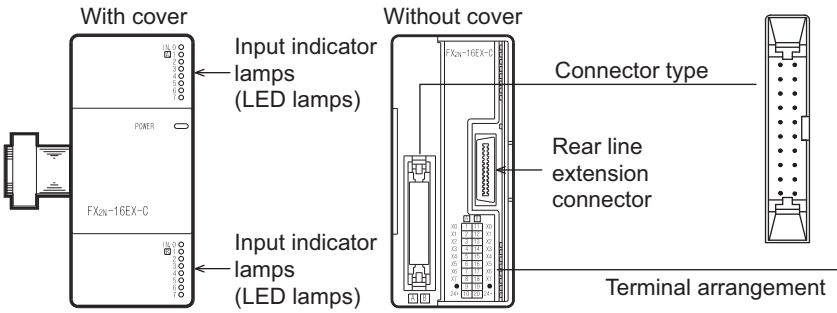

Side A	No.	No.	Side B
X0	1	11	X0
X1	2	12	X1
X2	3	13	X2
X3	4	14	X3
X4	5	15	X4
X5	6	16	X5
X6	7	17	X6
X7	8	18	X7
•	9	19	•
24+	10	20	24+

16.5.3 External dimensions

FX2N-8EX

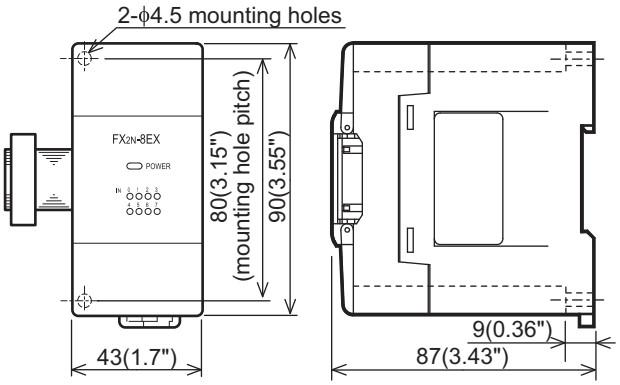

FX2N-16EX

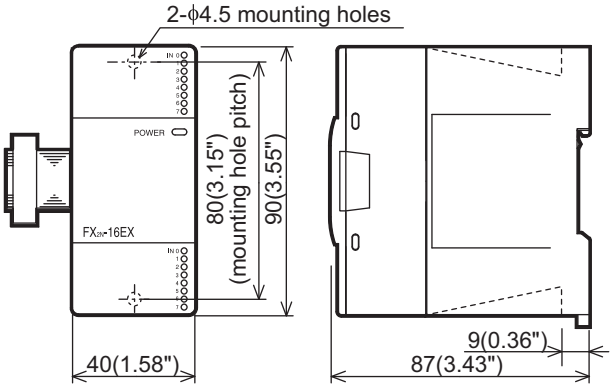

FX2N-16EX-C

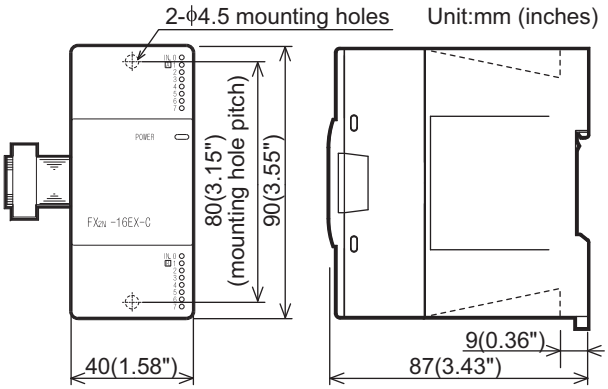

How to connect connector (FX2N-16EX-C)

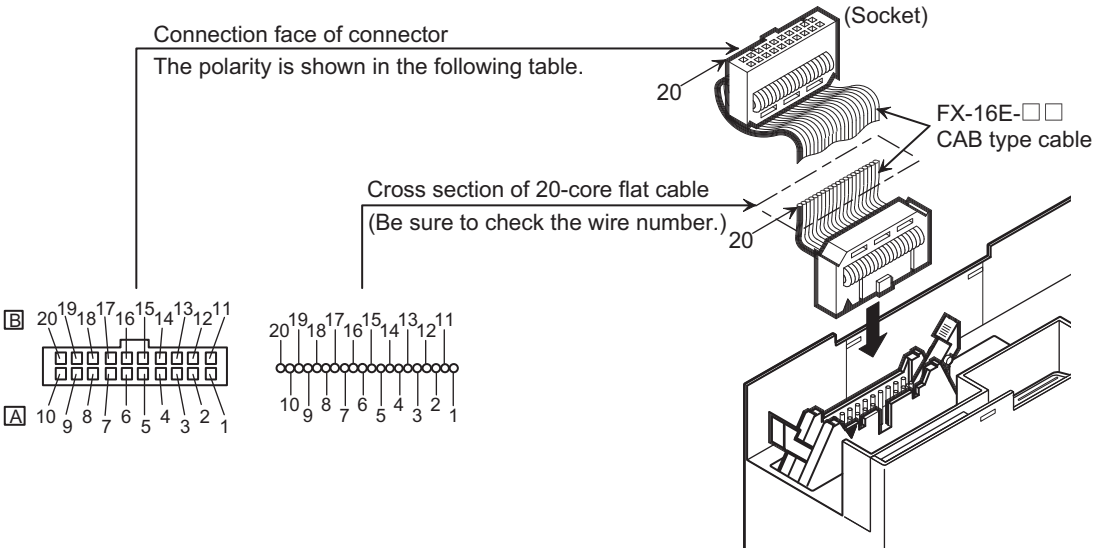

Side B	24+	•	X7	X6	X5	X4	X3	X2	X1	X0
Side A	24+	•	X7	X6	X5	X4	X3	X2	X1	X0

Side B is for the higher input numbers, and side A is for the lower input numbers.
(Exe.) Side B X050 to X057
Side A X040 to X047

16.6 FX2N-16EXL-C (5V DC Input: 16 Points)

16.6.1 Product specifications

The generic specifications are identical to the main unit specifications.

→ **Refer to Section 4.1 for generic specifications.**

1. Power supply specifications

Item	FX2N-16EXL-C
Product type	FX2N connector type extension block for each application
Rated voltage	24V DC (supplied from main unit and input/output powered extension unit)

2. Weight and Other specifications (External dimensions are described later.)

Item	FX2N-16EXL-C
MASS (Weight)	0.3kg (0.66lbs)
Other	• The extension cable is already connected to the extension block. • Accessories: Label for indication of input/output number • The DIN46277 rail (width: 35 mm (1.38")) or direct installation.

3. Input specifications

Item		FX2N-16EXL-C
Input points		16 points
Connection type		Connector terminal block
Input form		TTL level
Input signal voltage		5V DC ± 5%
Input signal current		40mA (at 5V DC), maximum
Input impedance		2.2kΩ
ON input sensitivity current	ON(Low)	1mA or more
	OFF(High)	0.4mA or less
Input sensing voltage	ON(Low)	1.5V DC or less
	OFF(High)	3.5V DC or more
Input response time	OFF→ON (High→Low)	1ms +1 ms, -0.5 ms
	ON→OFF (Low→High)	1ms +1 ms, -0.5 ms
Input signal form		TTL input
Input circuit insulation		Photo-coupler insulation
Indication of input operation		LED on panel lights when input.
Input circuit diagram		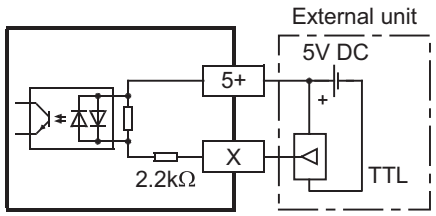

16.6.2 Parts identification and terminal arrangement

When an input (X) number is assigned, 8 points on side A will be used for the lower input numbers, and 8 points on side B will be used for the higher input numbers.

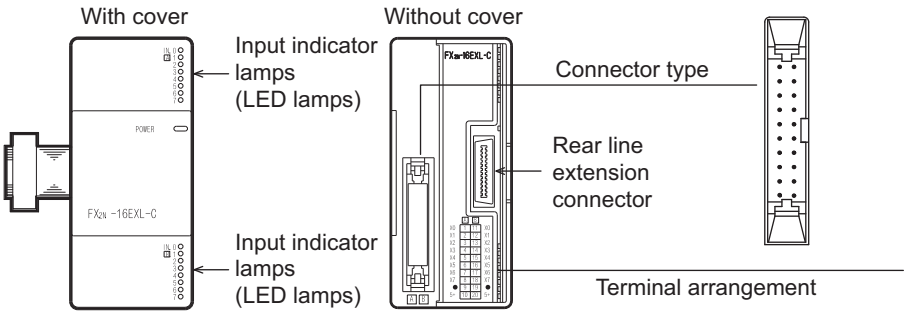

Side A	No.	No.	Side B
X0	1	11	X0
X1	2	12	X1
X2	3	13	X2
X3	4	14	X3
X4	5	15	X4
X5	6	16	X5
X6	7	17	X6
X7	8	18	X7
•	9	19	•
5+	10	20	5+

16.6.3 External dimensions

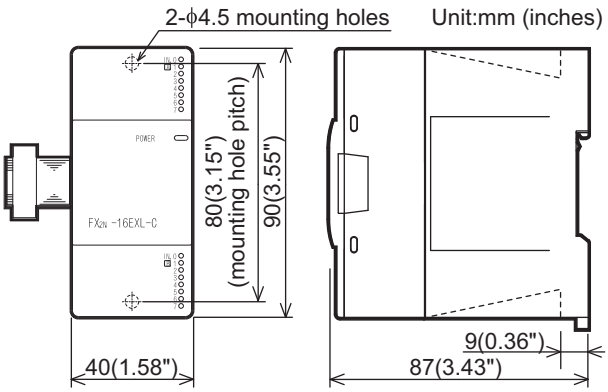

16.6.4 Example of wiring

1. Wiring on input side

Sink input

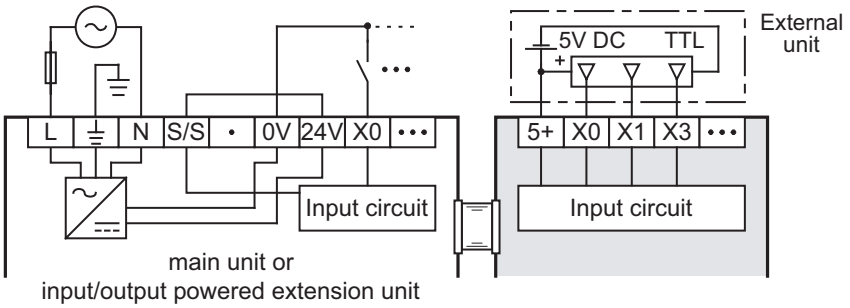

How to connect connector

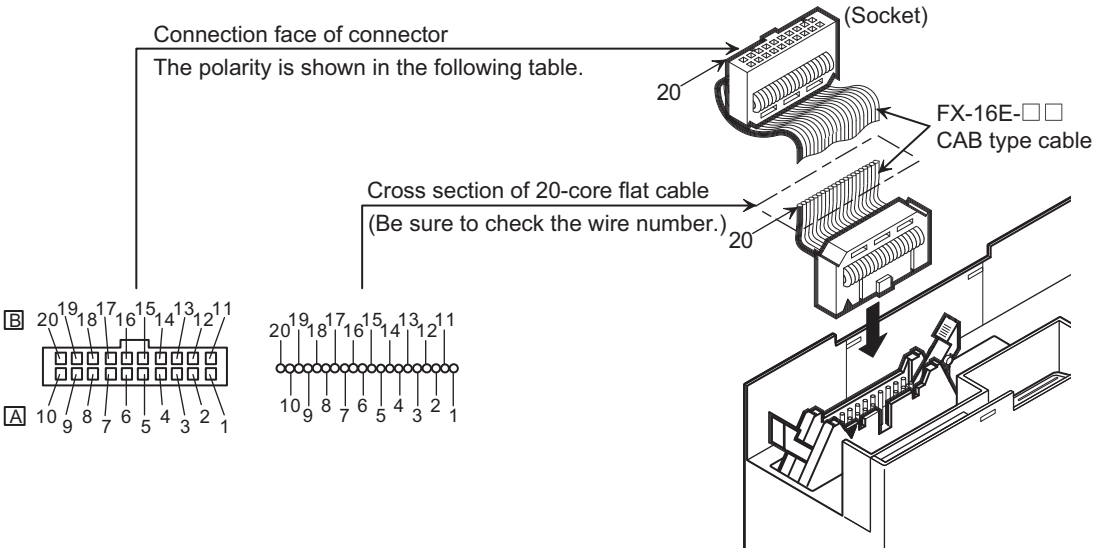

Side B	5+	•	X7	X6	X5	X4	X3	X2	X1	X0
Side A	5+	•	X7	X6	X5	X4	X3	X2	X1	X0

Side B is for the higher input numbers,
and side A is for the lower input numbers.
(Exe.) Side B X050 to X057
Side A X040 to X047

16.7 FX2N-8EX-UA1/UL (100V AC Input)

16.7.1 Product specifications

The generic specifications are identical to the main unit specifications.

→ **Refer to Section 4.1 for generic specifications.**

For external wiring, refer to the following chapters.

→ **Refer to Chapter 10 for input wiring.**

1. Power supply specifications

Item	FX2N-8EX-UA1/UL
Product type	FX2N extension block
Rated voltage	24V DC (supplied from main unit and input/output powered extension unit)

2. Weight and Other specifications (External dimensions are described later.)

Item	FX2N-8EX-UA1/UL
MASS (Weight)	0.2kg (0.44lbs)
Other	• The extension cable is already connected to the extension block. • Accessories: Label for indication of input/output number • The DIN46277 rail (width: 35 mm (1.38")) or direct installation.

3. Input specifications

Item		FX2N-8EX-UA1/UL
Input points		8 points
Connection type		Vertical terminal block (M3 screws)
Input form		AC input
Input signal voltage		100 to 120V AC
Input signal current		6.2mA/110V AC 60Hz 4.7mA/100V AC 50Hz
Input impedance		Approx. 21kΩ/50Hz Approx. 18kΩ/60Hz
ON input sensitivity current	Input ON current	3.8mA/80V AC or more
	Input OFF current	1.7mA/30V AC or more
Input response time		Approx. 25 to 30ms
Input signal form		Voltage contact
Input circuit insulation		Photo-coupler insulation
Indication of input operation		LED on panel lights when input.
Input circuit diagram		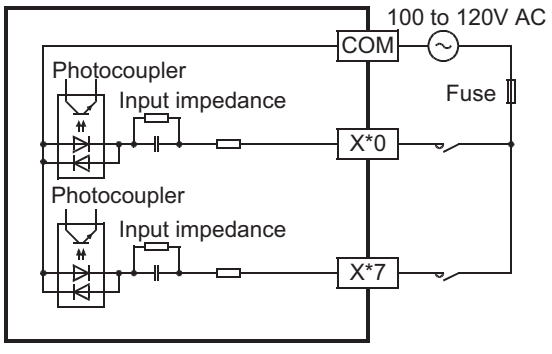

16.7.2 Parts identification and terminal arrangement

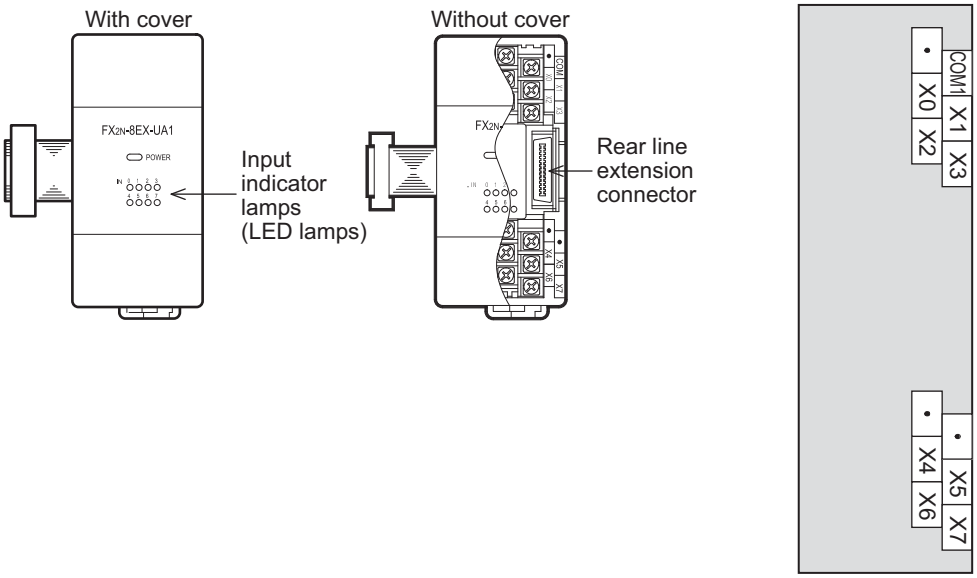

16.7.3 External dimensions

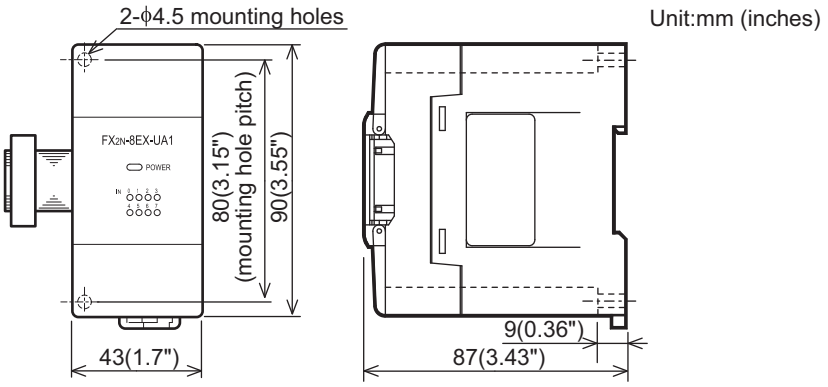

16.8 FX2N-8EYR-ES/UL, FX2N-16EYR-ES/UL (Relay Output)

16.8.1 Product specifications

The generic specifications are identical to the main unit specifications.

→ **Refer to Section 4.1 for generic specifications.**

For external wiring, refer to the following chapters.

→ **Refer to Chapter 12 for output wiring.**

1. Power supply specifications

Item	FX2N-8EYR-ES/UL	FX2N-16EYR-ES/UL
Product type	FX2N extension block	
Rated voltage	24V DC (supplied from main unit and input/output powered extension unit)	

2. Weight and Other specifications (External dimensions are described later.)

Item	FX2N-8EYR-ES/UL	FX2N-16EYR-ES/UL
MASS (Weight)	0.2kg (0.44lbs)	0.3kg (0.66lbs)
Other	• The extension cable is already connected to the extension block. • Accessories: Label for indication of input/output number • The DIN46277 rail (width: 35 mm (1.38")) or direct installation.	

3. Output specifications (Relay output type)

Item		FX2N-8EYR-ES/UL	FX2N-16EYR-ES/UL
Output Points		8 points	16 points
Connection type		Vertical terminal block (M3 screws)	
Output type		Relay	
External power supply		30V DC or less 240V AC or less (250V AC or less when the unit does not comply with CE, UL or cUL standards)	
Output circuit insulation		Mechanical insulation	
Indication of output operation		Supplying power to the relay coil will light the LED indicator lamp on panel.	
Max. load	Resistance load	2A/point The total resistance load current per common should be as follows: • 4 output points/common: 8A or less • 8 output points/common: 8A or less	
	Inductive load	80VA → **For the product life, refer to Subsection 14.4.3.** → **For cautions on external wiring, refer to Subsection 12.1.3.**	
Open circuit leakage current		-	
Min. load		5V DC, 2mA (reference values)	
Response time	OFF→ON	Approx. 10ms	
	ON→OFF	Approx. 10ms	
Output circuit configuration		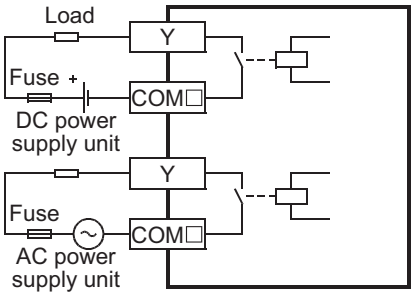 A common number applies to the □ of [COM□].	

16.8.2 Parts identification and terminal arrangement

FX2N-8EYR-ES/UL

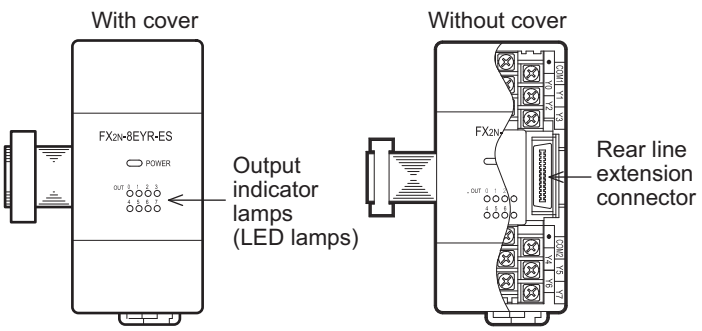

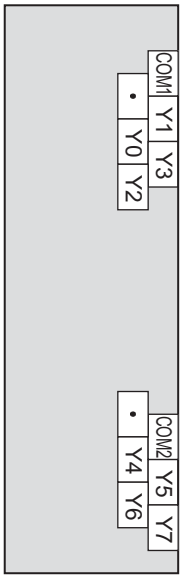

FX2N-16EYR-ES/UL

When an output (Y) number is assigned, 8 points on the upper side will be used for the lower output numbers, and 8 points on the lower side will be used for the higher output numbers.

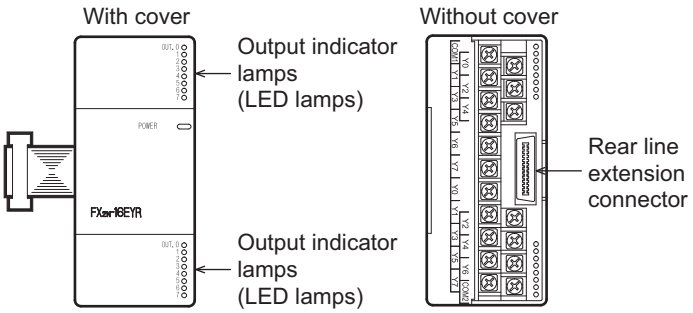

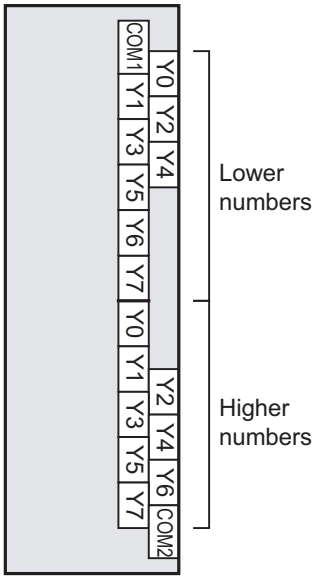

16.8.3 External dimensions

FX2N-8EYR-ES/UL

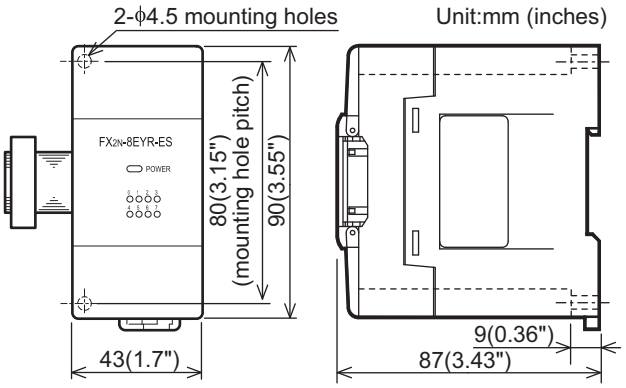

FX2N-16EYR-ES/UL

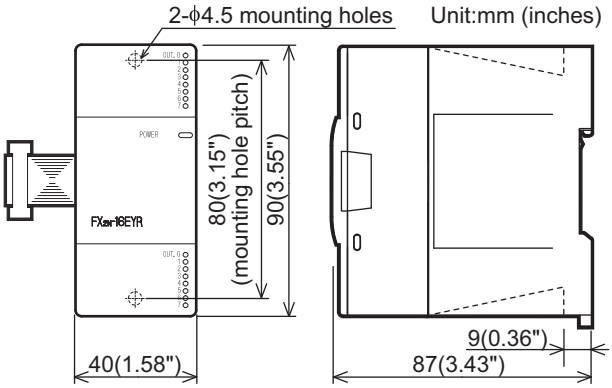

16.9 FX2N-8EYT-ESS/UL, FX2N-16EYT-ESS/UL (Transistor Output)

16.9.1 Product specifications

The generic specifications are identical to the main unit specifications.

→ **Refer to Section 4.1 for generic specifications.**

For external wiring, refer to the following chapters.

→ **Refer to Chapter 12 for output wiring.**

1. Power supply specifications

Item	FX2N-8EYT-ESS/UL	FX2N-16EYT-ESS/UL
Product type	FX2N extension block	
Rated voltage	24V DC (supplied from main unit and input/output powered extension unit)	

2. Weight and Other specifications (External dimensions are described later.)

Item	FX2N-8EYT-ESS/UL	FX2N-16EYT-ESS/UL
MASS (Weight)	0.2kg (0.44lbs)	0.3kg (0.66lbs)
Other	• The extension cable is already connected to the extension block. • Accessories: Label for indication of input/output number • The DIN46277 rail (width: 35 mm (1.38")) or direct installation.	

3. Output specifications (Transistor output type)

Item		FX2N-8EYT-ESS/UL	FX2N-16EYT-ESS/UL
Output Points		8 points	16 points
Connection type		Vertical terminal block (M3 screws)	
Output unit/type		Transistor/source output	
External power supply		5 to 30V DC	
Output circuit insulation		Photo-coupler insulation	
Indication of output operation		Activation of the photo-coupler will light the LED indicator lamp on panel.	
Max. load	Resistance load	0.5A/point The total load current per common should be as follows: • 4 output points/common: 0.8A or less • 8 output points/common: 1.6A or less	
	Inductive load	12W/24V DC	
Open circuit leakage current		0.1mA/30V DC	
Min. load		-	
Response time	OFF→ON	0.2ms or less for 200mA (at 24V DC)	
	ON→OFF	0.2ms or less for 200mA (at 24V DC)	
Output circuit configuration		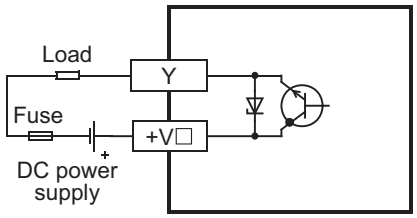 A common number applies to the □ of [+V□].	

16.9.2 Parts identification and terminal arrangement

FX2N-8EYT-ESS/UL

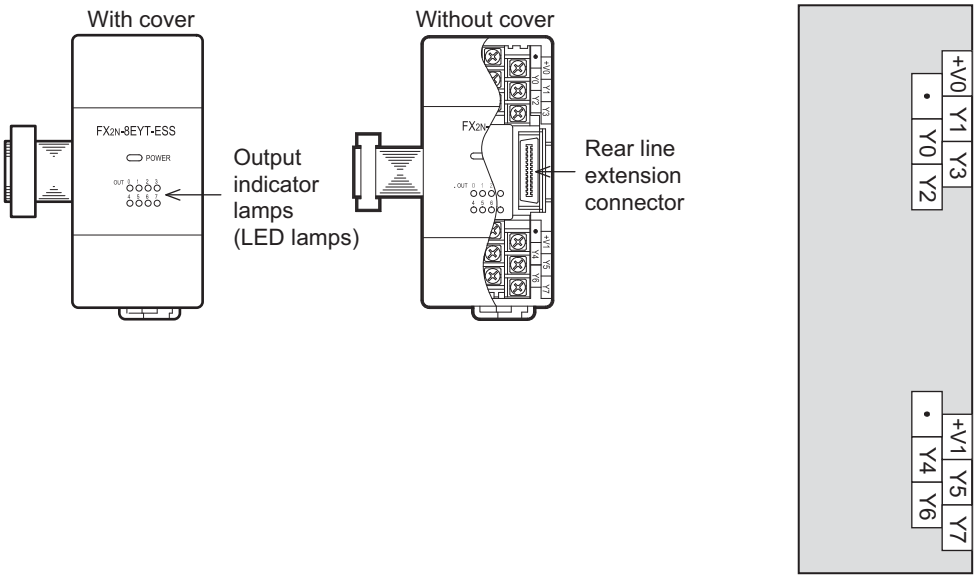

FX2N-16EYT-ESS/UL

When an output (Y) number is assigned, 8 points on the upper side will be used for the lower output numbers, and 8 points on the lower side will be used for the higher output numbers.

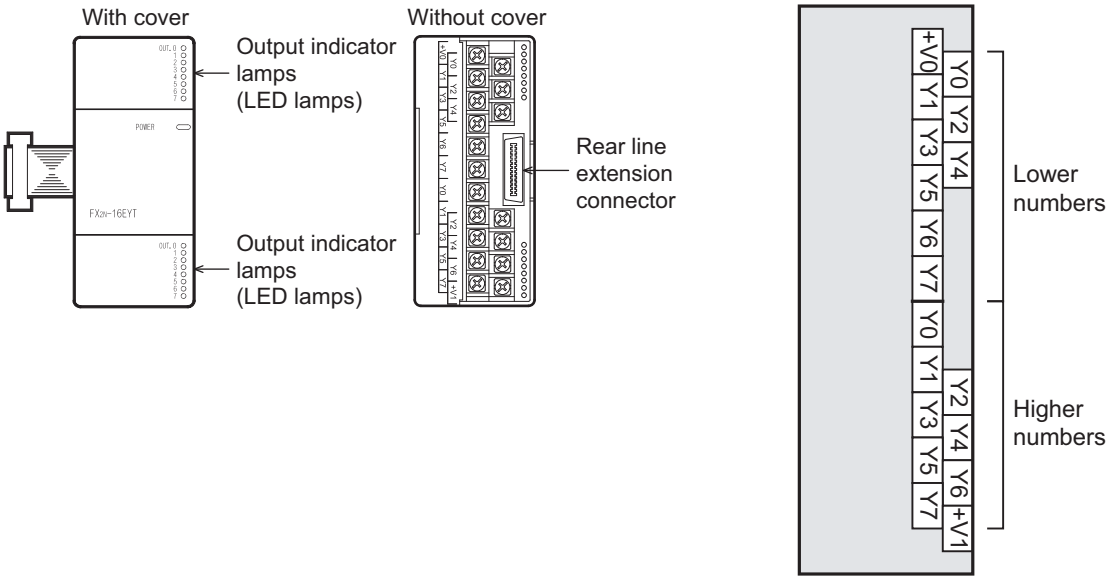

16.9.3 External dimensions

FX2N-8EYT-ESS/UL

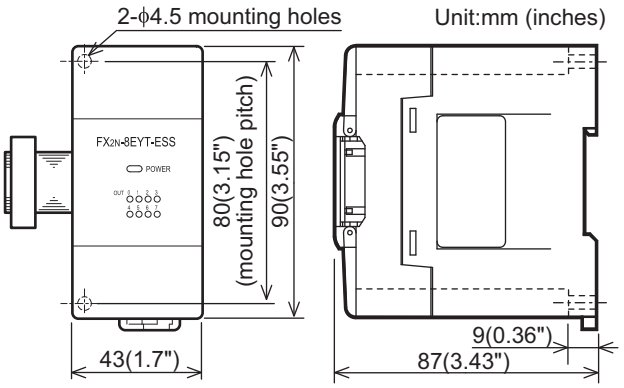

FX2N-16EYT-ESS/UL

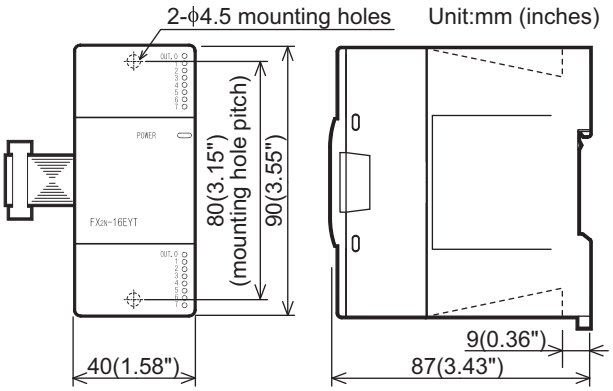

16.10 FX2N-8EYR, FX2N-16EYR (Relay Output)

16.10.1 Product specifications

The generic specifications are identical to the main unit specifications.

→ **Refer to Section 4.1 for generic specifications.**

For external wiring, refer to the following chapters.

→ **Refer to Chapter 12 for output wiring.**

1. Power supply specifications

Item	FX2N-8EYR	FX2N-16EYR
Product type	FX2N extension block	
Rated voltage	24V DC (supplied from main unit and input/output powered extension unit)	

2. Weight and Other specifications (External dimensions are described later.)

Item	FX2N-8EYR	FX2N-16EYR
MASS (Weight)	0.2kg (0.44lbs)	0.3kg (0.66lbs)
Other	• The extension cable is already connected to the extension block. • Accessories: Label for indication of input/output number • The DIN46277 rail (width: 35 mm (1.38")) or direct installation.	

3. Output specifications (Relay output type)

Item		FX2N-8EYR	FX2N-16EYR
Output Points		8 points	16 points
Connection type		Vertical terminal block (M3 screws)	
Output type		Relay	
External power supply		250V AC 30V DC or less	
Output circuit insulation		Mechanical insulation	
Indication of output operation		Supplying power to the relay coil will light the LED indicator lamp on panel.	
Max. load	Resistance load	2A/point The total resistance load current per common should be as follows: • 4 output points/common: 8A or less • 8 output points/common: 8A or less	
	Inductive load	80VA → **For the product life, refer to Subsection 14.4.3.** → **For cautions on external wiring, refer to Subsection 12.1.3.**	
Open circuit leakage current		-	
Min. load		5V DC, 2mA (reference values)	
Response time	OFF→ON	Approx. 10ms	
	ON→OFF	Approx. 10ms	
Output circuit configuration		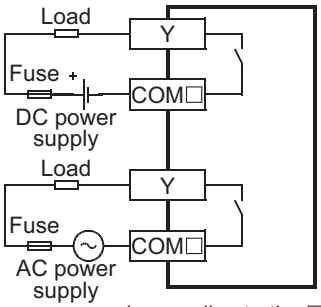 A common number applies to the □ of [COM□].	

16.10.2 Parts identification and terminal arrangement

FX2N-8EYR

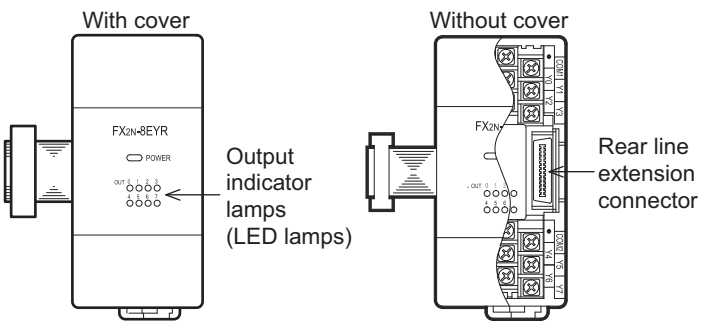

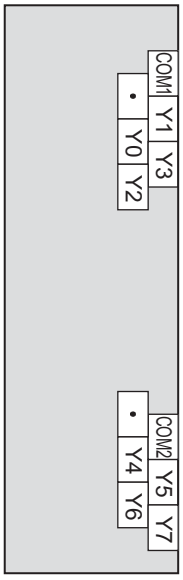

FX2N-16EYR

When an output (Y) number is assigned, 8 points on the upper side will be used for the lower output numbers, and 8 points on the lower side will be used for the higher output numbers.

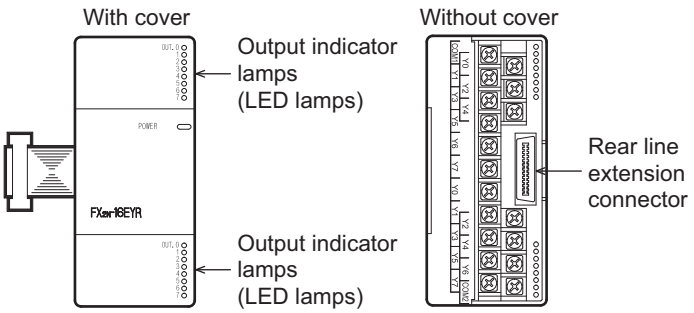

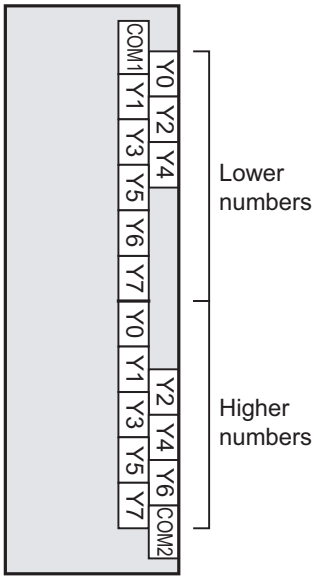

16.10.3 External dimensions

FX2N-8EYR

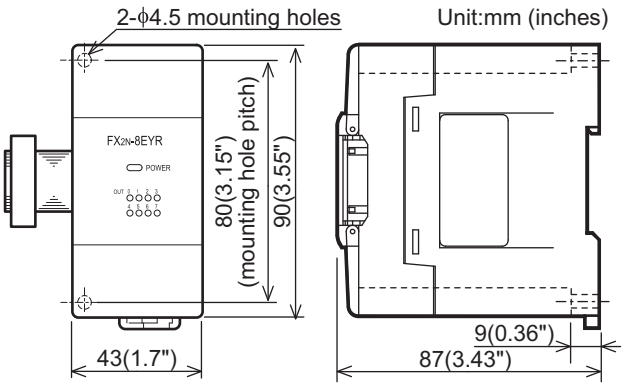

FX2N-16EYR

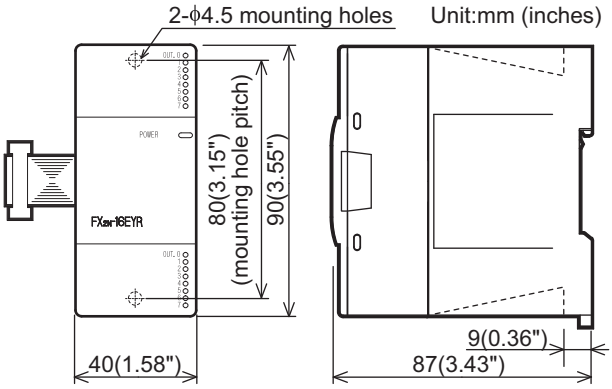

16.11 FX2N-8EYT, FX2N-16EYT, FX2N-16EYT-C (Transistor Output)

16.11.1 Product specifications

The generic specifications are identical to the main unit specifications.

→ **Refer to Section 4.1 for generic specifications.**

For external wiring, refer to the following chapters.

→ **Refer to Chapter 12 for output wiring.**

1. Power supply specifications

Item	FX2N-8EYT	FX2N-16EYT	FX2N-16EYT-C
Product type	FX2N extension block		FX2N connector type extension block
Rated voltage	24V DC (supplied from main unit and input/output powered extension unit)		

2. Weight and Other specifications (External dimensions are described later.)

Item	FX2N-8EYT	FX2N-16EYT	FX2N-16EYT-C
MASS (Weight)	0.2kg (0.44lbs)	0.3kg (0.66lbs)	
Other	• The extension cable is already connected to the extension block. • Accessories: Label for indication of input/output number • The DIN46277 rail (width: 35 mm (1.38")) or direct installation.		

3. Output specifications (Transistor output type)

Item		FX2N-8EYT	FX2N-16EYT	FX2N-16EYT-C
Output Points		8 points	16 points	
Connection type		Vertical terminal block (M3 screws)		Connector terminal block
Output unit/type		Transistor/sink output		
External power supply		5 to 30V DC		
Output circuit insulation		Photo-coupler insulation		
Indication of output operation		Activation of the photo-coupler will light the LED indicator lamp on panel.		
Max. load	Resistance load	0.5A/point The total load current per common should be as follows: • 4 output points/common: 0.8A or less • 8 output points/common: 1.6A or less		0.3A/point The total load current per common should be as follows: • 16 output points/common: 1.6A or less
	Inductive load	12W/24V DC		7.2 W/24V DC
Open circuit leakage current		0.1mA/30V DC		
Min. load		-		
Response time	OFF→ON	0.2ms or less for 200mA (at 24V DC)		
	ON→OFF	0.2ms or less for 200mA (at 24V DC)		
Output circuit configuration		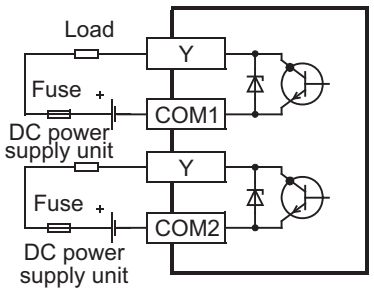		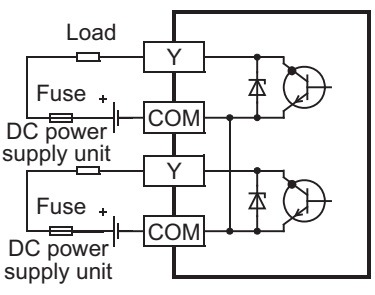

16.11.2 Parts identification and terminal arrangement

FX2N-8EYT

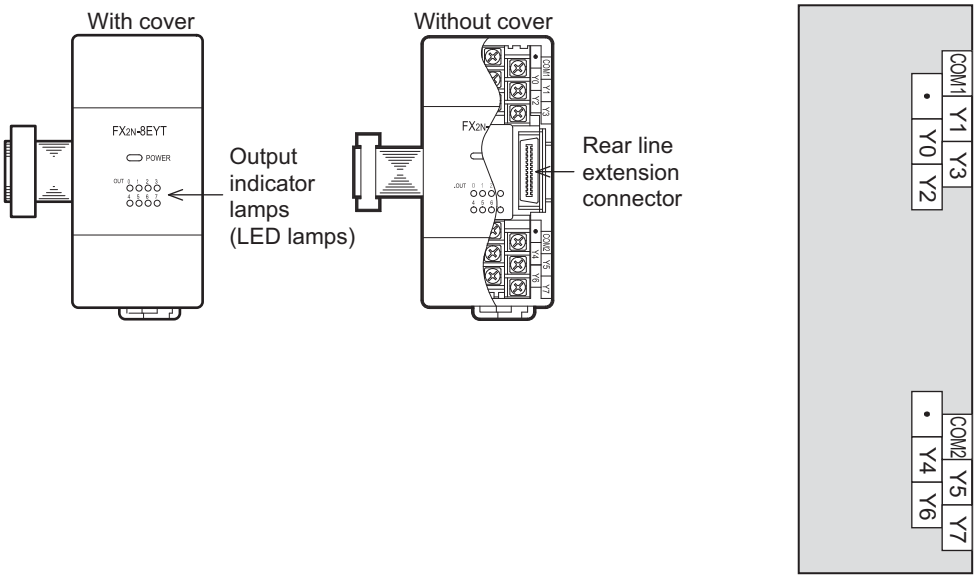

FX2N-16EYT

When an output (Y) number is assigned, 8 points on the upper side will be used for the lower output numbers, and 8 points on the lower side will be used for the higher output numbers.

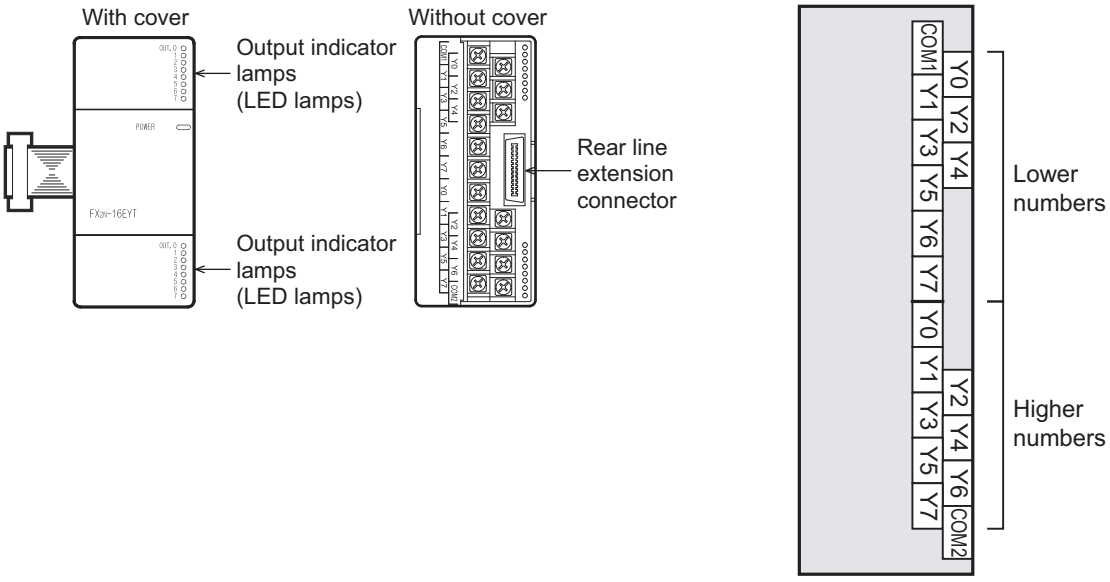

FX2N-16EYT-C

When an output (Y) number is assigned, 8 points on side A will be used for the lower output numbers, and 8 points on side B will be used for the higher output numbers.

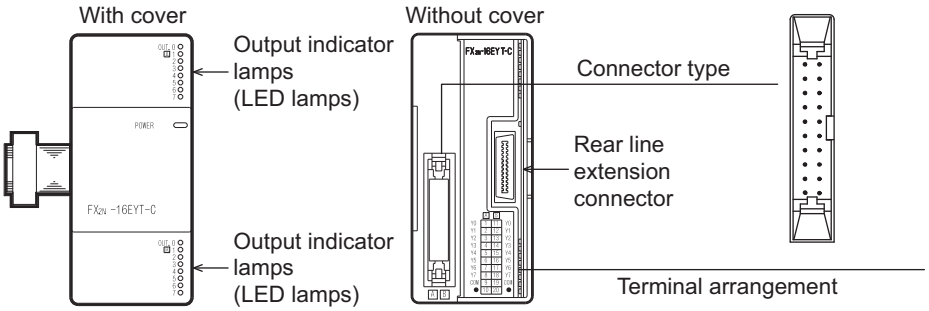

Side A	No.	No.	Side B
Y0	1	11	Y0
Y1	2	12	Y1
Y2	3	13	Y2
Y3	4	14	Y3
Y4	5	15	Y4
Y5	6	16	Y5
Y6	7	17	Y6
Y7	8	18	Y7
COM	9	19	COM
•	10	20	•

16.11.3 External dimensions

FX2N-8EYT

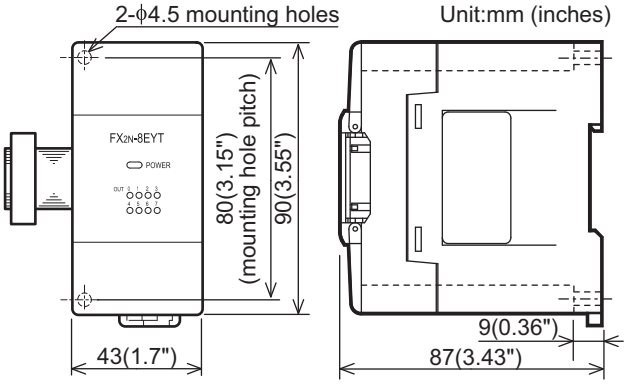

FX2N-16EYT

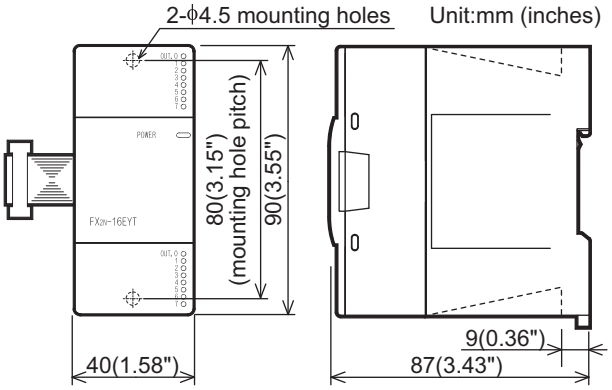

FX2N-16EYT-C

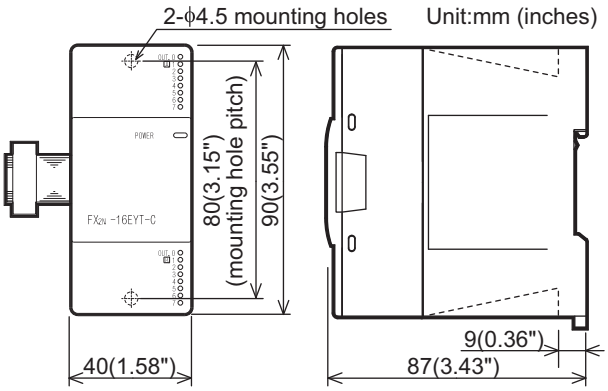

How to connect connector (FX2N-16EYT-C)

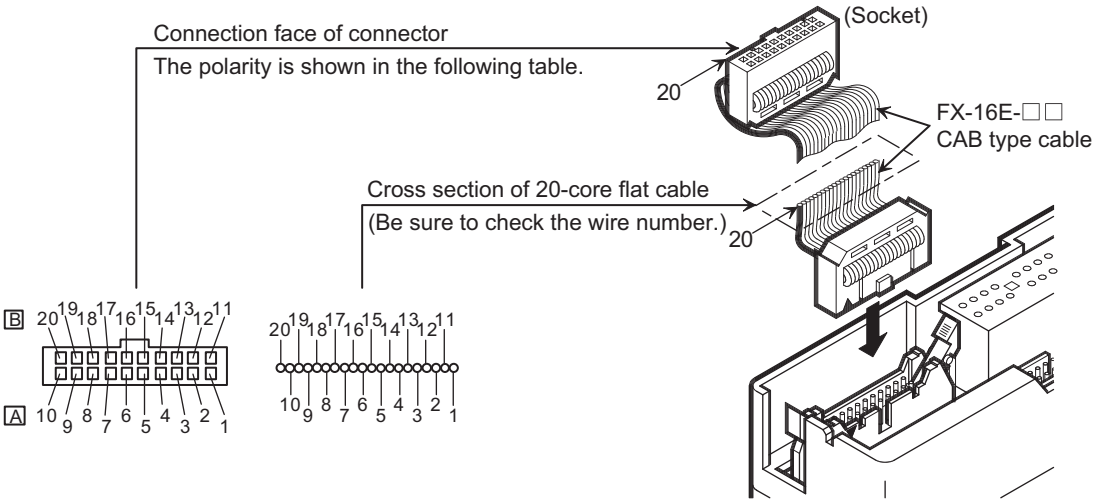

Side B	•	COM	Y7	Y6	Y5	Y4	Y3	Y2	Y1	Y0
Side A	•	COM	Y7	Y6	Y5	Y4	Y3	Y2	Y1	Y0

Side B is for the higher input numbers, and side A is for the lower input numbers.
(Exe.) Side B X050 to X057
Side A X040 to X047

16.12 FX2N-8EYT-H (Transistor Output)

16.12.1 Product specifications

The generic specifications are identical to the main unit specifications.

→ **Refer to Section 4.1 for generic specifications.**

For external wiring, refer to the following chapters.

→ **Refer to Chapter 12 for output wiring.**

1. Power supply specifications

Item	FX2N-8EYT-H
Product type	FX2N extension block
Rated voltage	24V DC (supplied from main unit and input/output powered extension unit)

2. Weight and Other specifications (External dimensions are described later.)

Item	FX2N-8EYT-H
MASS (Weight)	0.2kg (0.44lbs)
Other	• The extension cable is already connected to the extension block. • Accessories: Label for indication of input/output number • The DIN46277 rail (width: 35 mm (1.38")) or direct installation.

3. Output specifications (Transistor output type)

Item		FX2N-8EYT-H
Output Points		8 points
Connection type		Vertical terminal block (M3 screws)
Output unit/type		Transistor/sink output
External power supply		5 to 30V DC
Output circuit insulation		Photo-coupler insulation
Indication of output operation		Activation of the photo-coupler will light the LED indicator lamp on panel.
Max. load	Resistance load	1A/point The total load current per common should be as follows: • 4 output points/common: 2A or less
	Inductive load	24W/24V DC
Open circuit leakage current		0.1mA/30V DC
Min. load		-
Response time	OFF→ON	0.2ms or less/1A
	ON→OFF	0.4ms or less/1A
Output circuit configuration		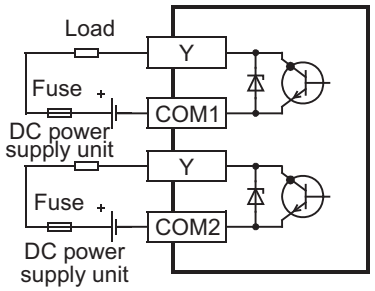

16.12.2 Parts identification and terminal arrangement

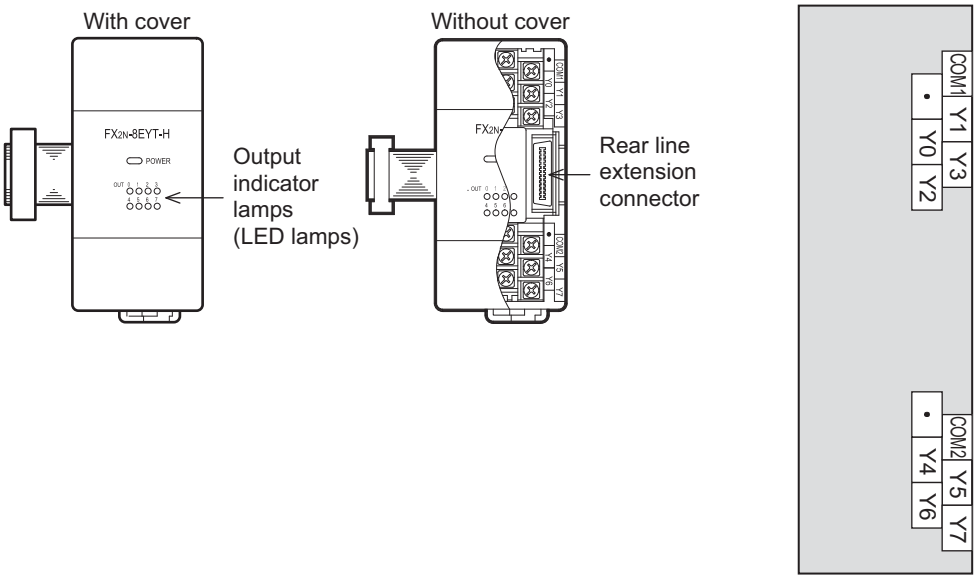

16.12.3 External dimensions

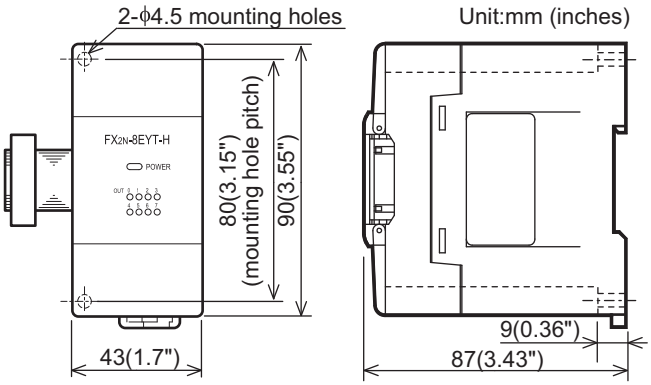

16.13 FX2N-16EYS (Triac Output: 16 Points)

16.13.1 Product specifications

The generic specifications are identical to the main unit specifications.

→ **Refer to Section 4.1 for generic specifications.**

For external wiring, refer to the following chapters.

→ **Refer to Chapter 12 for output wiring.**

1. Power supply specifications

Item	FX2N-16EYS
Product type	FX2N extension block
Rated voltage	24V DC (supplied from main unit and input/output powered extension unit)

2. Weight and Other specifications (External dimensions are described later.)

Item	FX2N-16EYS
MASS (Weight)	0.3kg (0.66lbs)
Other	• The extension cable is already connected to the extension block. • Accessories: Label for indication of input/output number • The DIN46277 rail (width: 35 mm (1.38")) or direct installation.

3. Output specifications (Triac output type)

Item		FX2N-16EYS
Output Points		16 points
Connection type		Vertical terminal block (M3 screws)
Output type		Triac output (SSR)
External power supply		85 to 242V AC
Output circuit insulation		Photo-coupler insulation
Indication of output operation		Activation of the photo-thyristor will light the LED indicator lamp on panel.
Max. load	Resistance load	0.3A/point The total load current per common should be as follows: • 8 output points/common: 0.8A or less
	Inductive load	15VA/100V AC, 30VA/200V AC
Open circuit leakage current		1mA/100V AC, 2mA/200V AC
Min. load		0.4VA/100V AC, 1.6VA/200V AC
Response time	OFF→ON	1ms or less
	ON→OFF	10ms or less
Output circuit configuration		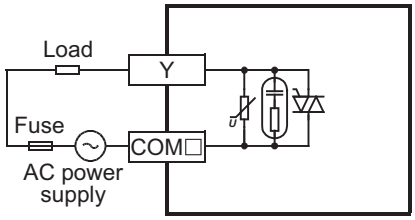 A common number applies to the □ of [COM□].

16.13.2 Parts identification and terminal arrangement

When an output (Y) number is assigned, 8 points on the upper side will be used for the lower output numbers, and 8 points on the lower side will be used for the higher output numbers.

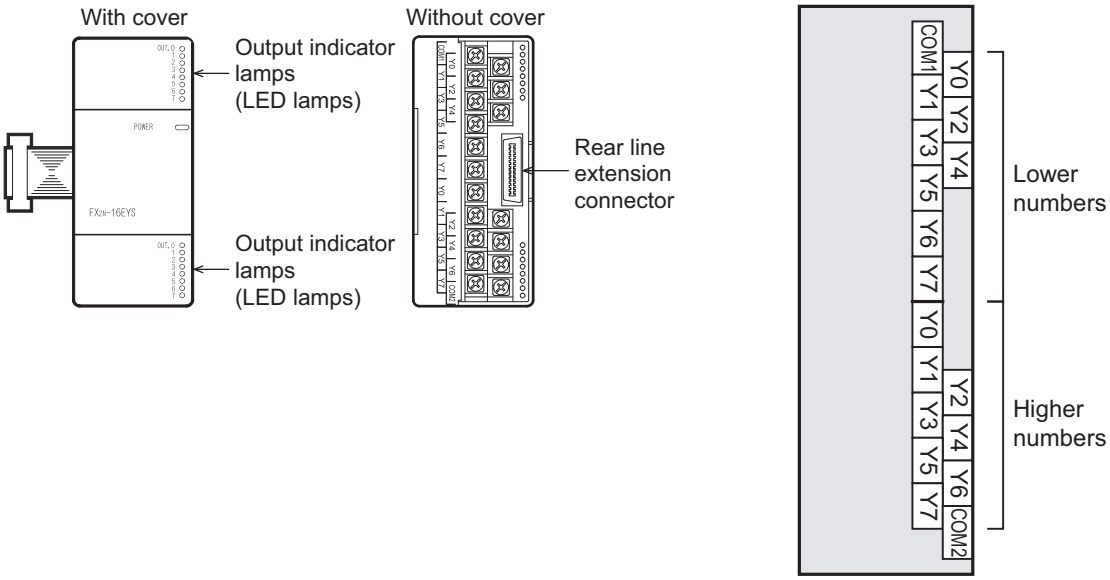

16.13.3 External dimensions

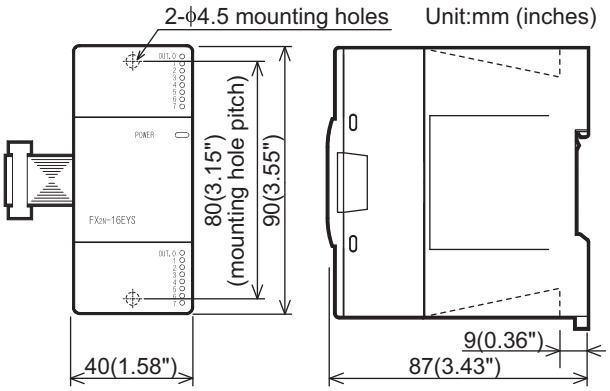

17. Extension Power Supply Unit

DESIGN PRECAUTIONS ⚠ **DANGER**

- Make sure to have the following safety circuits outside of the PLC to ensure safe system operation even during external power supply problems or PLC failure.
  Otherwise, malfunctions may cause serious accidents.
  1) Most importantly, have the following: an emergency stop circuit, a protection circuit, an interlock circuit for opposite movements (such as normal vs. reverse rotation), and an interlock circuit (to prevent damage to the equipment at the upper and lower positioning limits).
  2) Note that when the PLC CPU detects an error, such as a watchdog timer error, during self-diagnosis, all outputs are turned off. Also, when an error that cannot be detected by the PLC CPU occurs in an input/output control block, output control may be disabled.
  External circuits and mechanisms should be designed to ensure safe machinery operation in such a case.
  3) Note that when the PLC CPU detects an error, such as a watchdog timer error, during self-diagnosis, all outputs are turned off. Also, when an error that cannot be detected by the PLC CPU occurs in an input/output control block, output control may be disabled.
  External circuits and mechanisms should be designed to ensure safe machinery operation in such a case.
  4) Note that when an error occurs in a relay, triac or transistor output device, the output could be held either on or off.
  For output signals that may lead to serious accidents, external circuits and mechanisms should be designed to ensure safe machinery operation in such a case.

DESIGN PRECAUTIONS ⚠ **CAUTION**

- Do not bundle the control line together with or lay it close to the main circuit or power line. As a guideline, lay the control line at least 100mm (3.94") or more away from the main circuit or power line.
  Noise may cause malfunctions.

17.1 Outline

When the internal power supplied from the FX3G Series PLC is insufficient for powering output extension blocks or special function blocks, the FX3U-1PSU-5V (extension power supply unit) is available.
Only one FX3U-1PSU-5V unit may be connected to a FX3G PLC system.
Connect extension equipment to the FX3U-1PSU-5V according to the configuration specification limits described in Subsection 17.2.2.

→ For the system configuration with FX3U-1PSU-5V, refer to Chapter 6.
→ For the mounting, refer to Chapter 8.
→ For the wiring, refer to Chapter 9.

17.2 Specifications

17.2.1 Generic Specifications

The generic specifications are the same as those for the main unit.

→ **For the generic specifications, refer to Section 4.1.**

17.2.2 Performance Specifications

Items		Specifications
Supply voltage		100-240V AC
Allowable supply voltage range		85-264V AC
Rated frequency		50/60Hz
Allowable instantaneous power failure time		The allowable momentary power failure time depends on the power supply used. • 100V AC power supply system: The operation is continued to the momentary power failure for 10 or less ms. • 200V AC power supply system: The operation is continued to the momentary power failure for 100 or less ms.
Rush current		30A max. 5ms or less/100V AC, 65A max. 5ms or less/200V AC
Power consumption		20W Max.
Output current (Internal for supply)	24V DC	0.3A*1
	5V DC	1A*1

*1. The output current depends on the ambient temperature as shown in the dirating curve below.

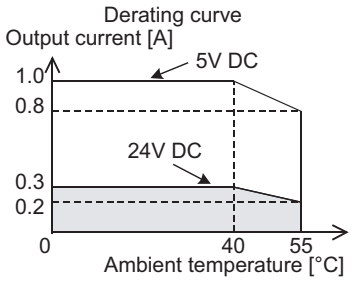

17.2.3 External Dimensions

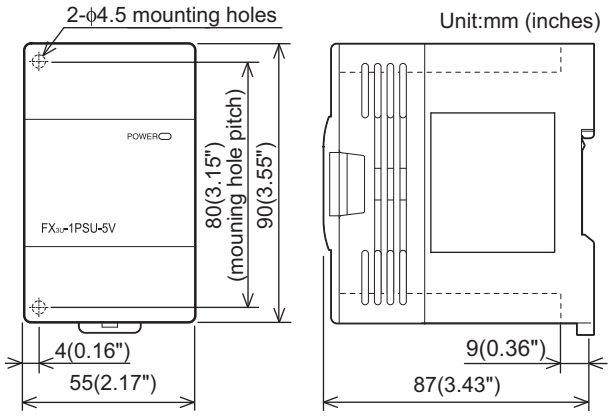

17.3 Extension Power Supply Unit Related Precaution

1. The power is supplied as follows when the input extension block (including the FX2N-8ER-ES/UL and FX2N-8ER) is used on the downstream side of the extension power supply unit.

- When the main unit is located on the upstream side of the extension power supply unit
  The power is supplied from the main unit.

  → For details, refer to Chapter 6
- When the input/output powered extension unit is located on the upstream side of the extension power supply unit
  The power is supplied from the 24V DC service power supply of the input/output powered extension unit.

  → For details, refer to Chapter 6

2. Grounding and power cables should be positioned to exit the unit from above.

→ For details, refer to Subsection 9.4.4 and Subsection 9.4.5.

18. Other Extension Devices and Optional Units (External Dimensions and Terminal Arrangement)

18.1 Special Function Units/Blocks

18.1.1 FX2N-2AD

External Dimensions, Terminal Layout

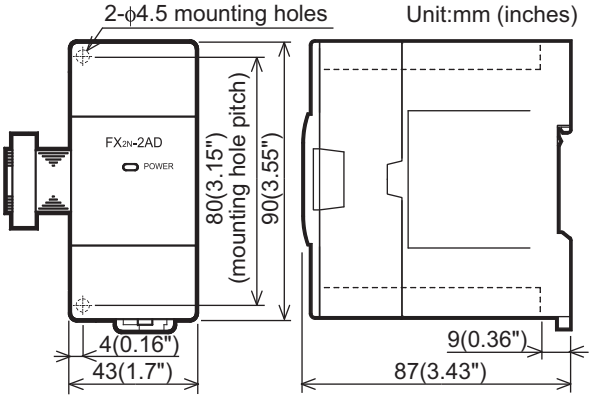

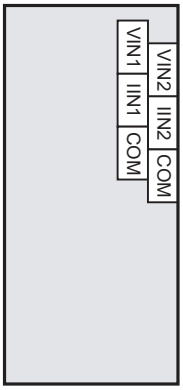

- MASS(Weight): 0.2kg (0.44lbs)
- Installation: DIN rail of 35mm (1.38") in width or screws
- Accessories: Label for indication of special unit/block number, Manual supplied with product
- Terminal block: M3 screws
- The extension cable is already connected to the extension block

18.1.2 FX2N-2DA

External Dimensions, Terminal Layout

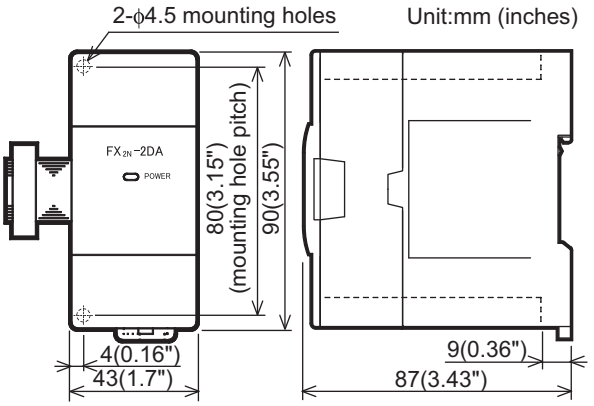

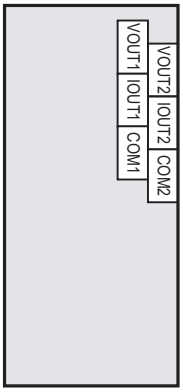

- MASS(Weight): 0.2kg (0.44lbs)
- Installation: DIN rail of 35mm (1.38") in width or screws
- Accessories: Label for indication of special unit/block number, Manual supplied with product
- Terminal block: M3 screws
- The extension cable is already connected to the extension block

18.1.3 FX3U-4AD

External Dimensions, Terminal Layout

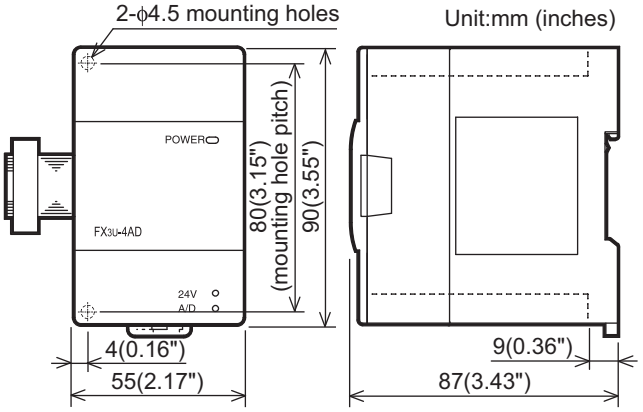

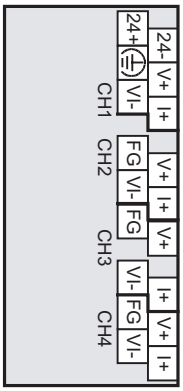

- MASS(Weight): 0.2kg (0.44lbs)
- Installation: DIN rail of 35mm (1.38") in width or screws
- Accessories: Label for indication of special unit/block number, Dust Proof sheet, Manual supplied with product
- Terminal block: M3 screws
- The extension cable is already connected to the extension block

18.1.4 FX3U-4DA

External Dimensions, Terminal Layout

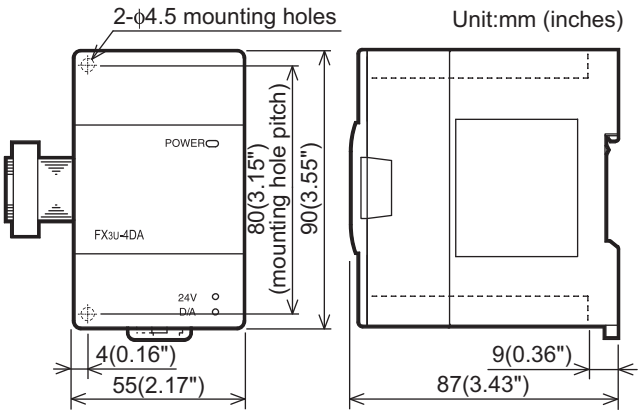

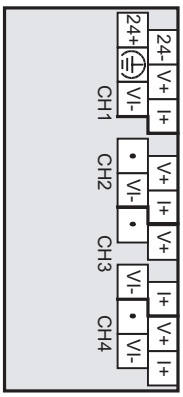

- MASS(Weight): 0.2kg (0.44lbs)
- Installation: DIN rail of 35mm (1.38") in width or screws
- Accessories: Label for indication of special unit/block number, Dust Proof sheet, Manual supplied with product
- Terminal block: M3 screws
- The extension cable is already connected to the extension block

18.1.5 FX2N-4AD

External Dimensions, Terminal Layout

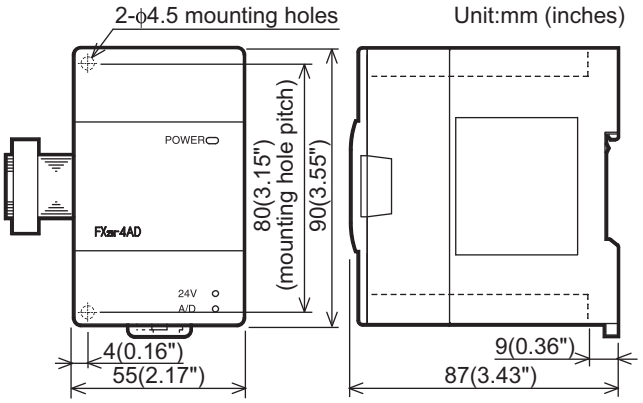

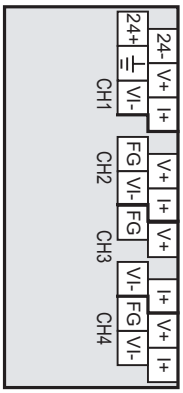

- MASS(Weight): 0.3kg (0.66lbs)
- Installation: DIN rail of 35mm (1.38") in width or screws
- Accessories: Label for indication of special unit/block number, Manual supplied with product
- Terminal block: M3 screws
- The extension cable is already connected to the extension block

18.1.6 FX2N-4DA

External Dimensions, Terminal Layout

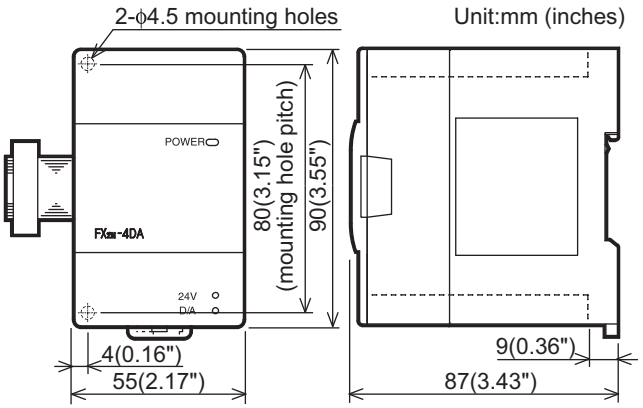

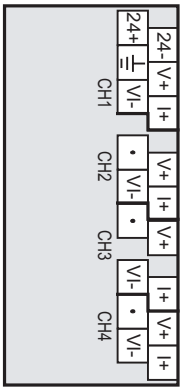

- MASS(Weight): 0.3kg (0.66lbs)
- Installation: DIN rail of 35mm (1.38") in width or screws
- Accessories: Label for indication of special unit/block number, Manual supplied with product
- Terminal block: M3 screws
- The extension cable is already connected to the extension block

18.1.7 FX2N-4AD-PT

External Dimensions, Terminal Layout

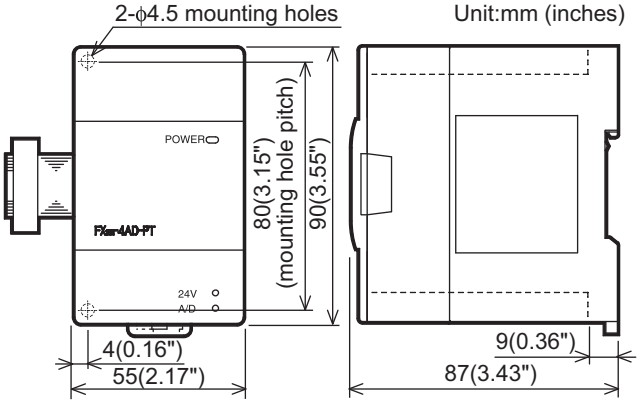

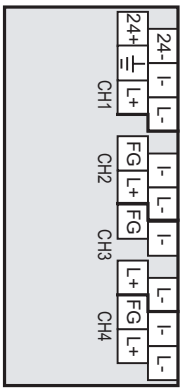

- MASS(Weight): 0.3kg (0.66lbs)
- Installation: DIN rail of 35mm (1.38") in width or screws
- Accessories: Label for indication of special unit/block number, Manual supplied with product
- Terminal block: M3 screws
- The extension cable is already connected to the extension block

18.1.8 FX2N-4AD-TC

External Dimensions, Terminal Layout

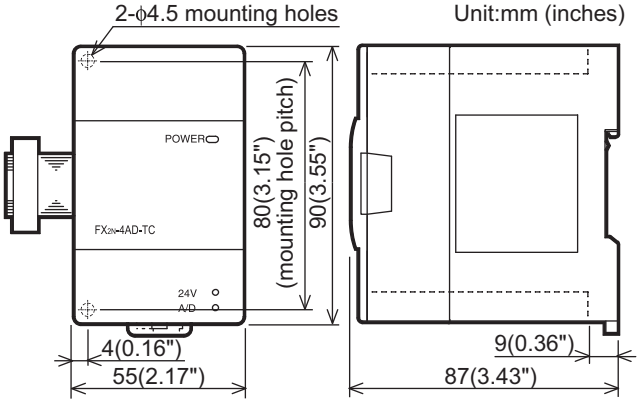

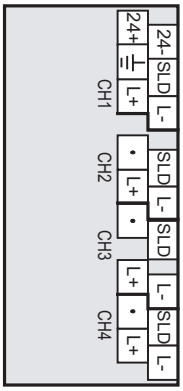

- MASS(Weight): 0.3kg (0.66lbs)
- Installation: DIN rail of 35mm (1.38") in width or screws
- Accessories: Label for indication of special unit/block number, Manual supplied with product
- Terminal block: M3 screws
- The extension cable is already connected to the extension block

18.1.9 FX2N-5A

External Dimensions, Terminal Layout

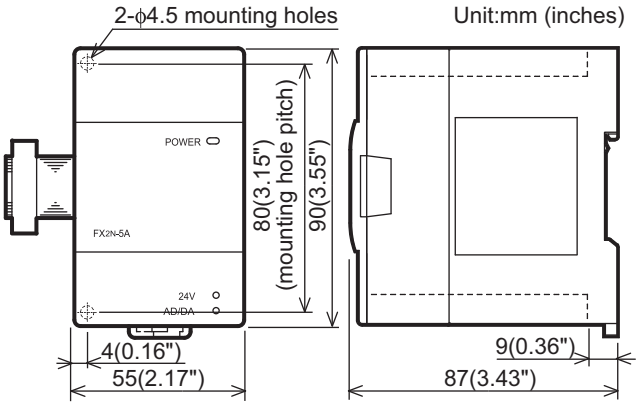

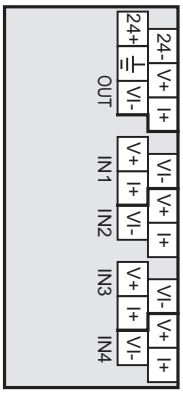

- MASS(Weight): 0.3kg (0.66lbs)
- Installation: DIN rail of 35mm (1.38") in width or screws
- Accessories: Label for indication of special unit/block number, Manual supplied with product
- Terminal block: M3 screws
- The extension cable is already connected to the extension block

18.1.10 FX2N-2LC

External Dimensions, Terminal Layout

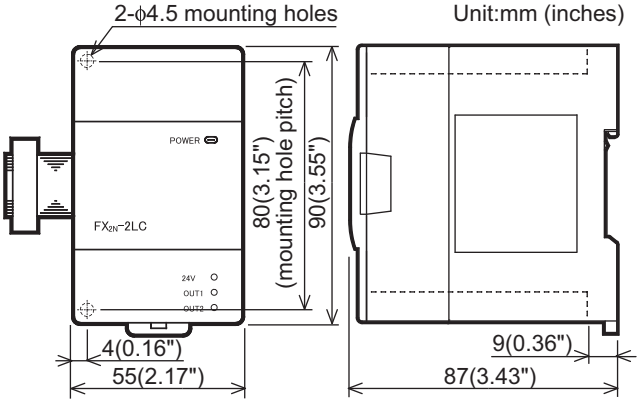

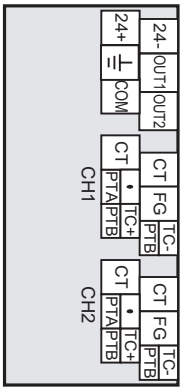

- MASS(Weight): 0.3kg (0.66lbs)
- Installation: DIN rail of 35mm (1.38") in width or screws
- Accessories: Label for indication of special unit/block number, Manual supplied with product
- Terminal block: M3 screws
- The extension cable is already connected to the extension block

18.1.11 FX2N-8AD

External Dimensions, Terminal Layout

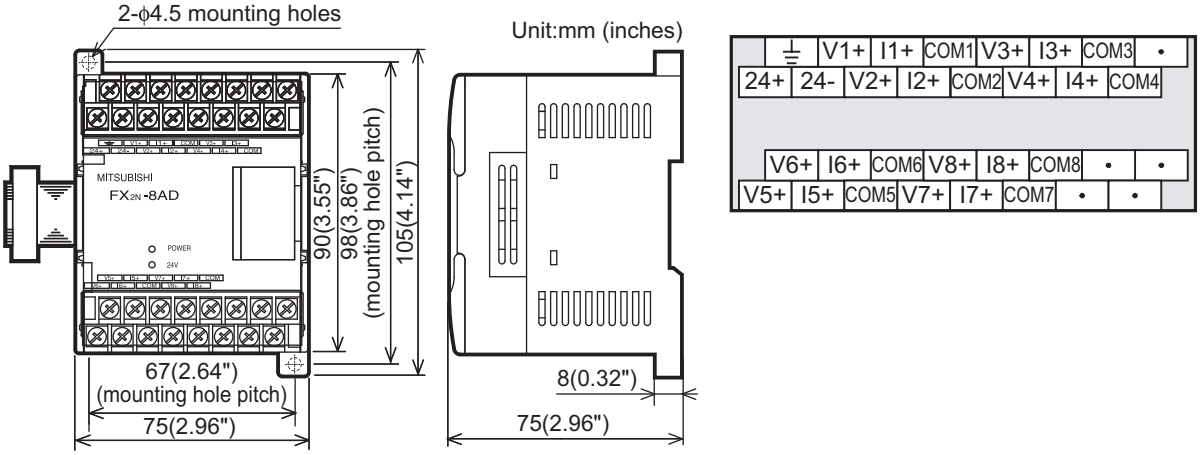

- MASS(Weight): 0.4kg (0.88lbs)
- Installation: DIN rail of 35mm (1.38") in width or screws
- Accessories: Label for indication of special unit/block number, Manual supplied with product
- Terminal block: M3.5 screws
- The extension cable is already connected to the extension block

18.1.12 FX2N-16CCL-M

External Dimensions, Terminal Layout

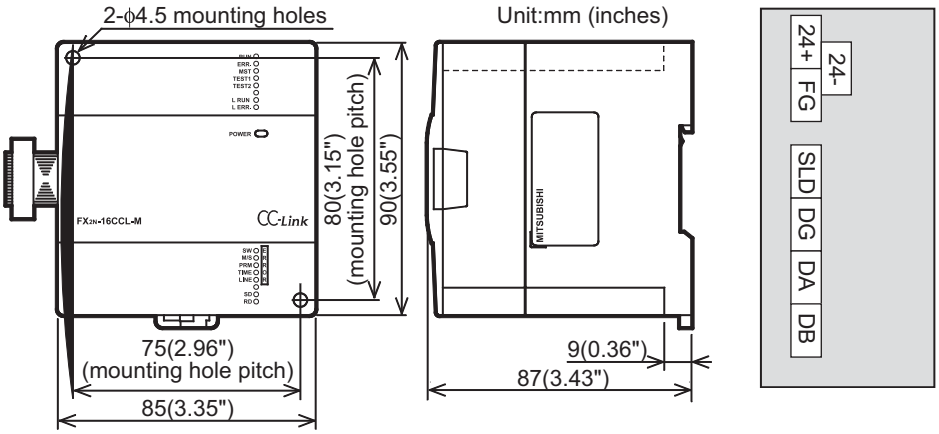

- MASS(Weight): 0.4kg (0.88lbs)
- Installation: DIN rail of 35mm (1.38") in width or screws
- Accessories: Label for indication of special unit/block number,
  Terminal resistor : 2 resistors for standard cable / 2 resistors for high-performance cable,
  Manual supplied with product
- Terminal block: M3 screw for power supply terminal, M3.5 screw for signal terminal
- The extension cable is already connected to the extension block

18.1.13 FX2N-32CCL

External Dimensions, Terminal Layout

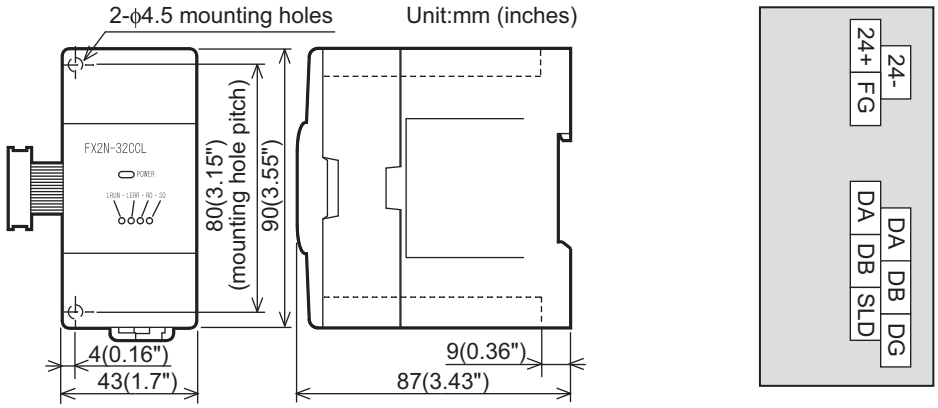

- MASS(Weight): 0.2kg (0.44lbs)
- Installation: DIN rail of 35mm (1.38") in width or screws
- Accessories: Label for indication of special unit/block number, Manual supplied with product
- Terminal block: M3 screws
- The extension cable is already connected to the extension block

18.1.14 FX3U-64CCL

External Dimensions, Terminal Layout

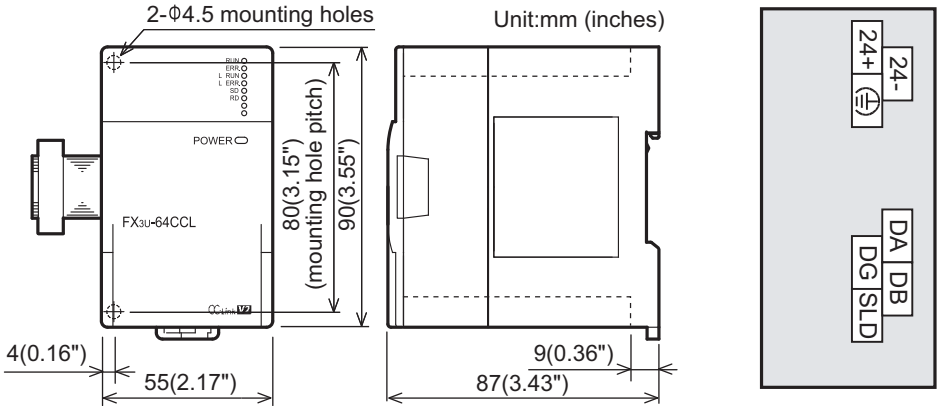

- MASS(Weight): 0.3kg (0.66lbs)
- Installation: DIN rail of 35mm (1.38") in width or screws
- Accessories: Label for indication of special unit/block number, Manual supplied with product
- Terminal block: M3 screws for power supply terminal, CC-Link connection terminal
  M3.5 screws for CC-Link connection terminal block mounting screws (black)
- The extension cable is already connected to the extension block

18.1.15 FX2N-64CL-M

External Dimensions

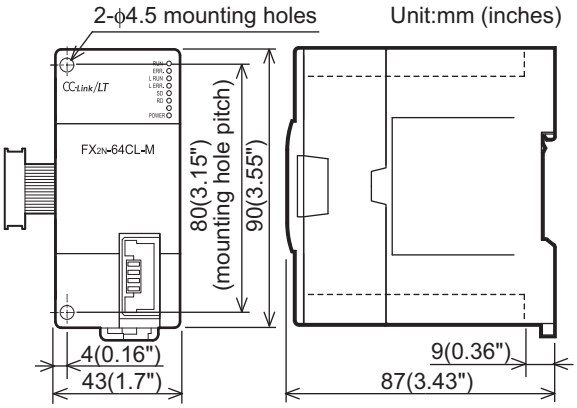

- MASS(Weight): 0.15kg (0.33lbs)
- Installation: DIN rail of 35mm (1.38") in width or screws
- Accessories: Label for indication of special unit/block number, Manual supplied with product
- The connector for CC-Link/LT interface is on the front face of the product
- The extension cable is already connected to the extension block

18.2 Special Adapters

18.2.1 FX3U-4AD-ADP

External Dimensions, Terminal Layout

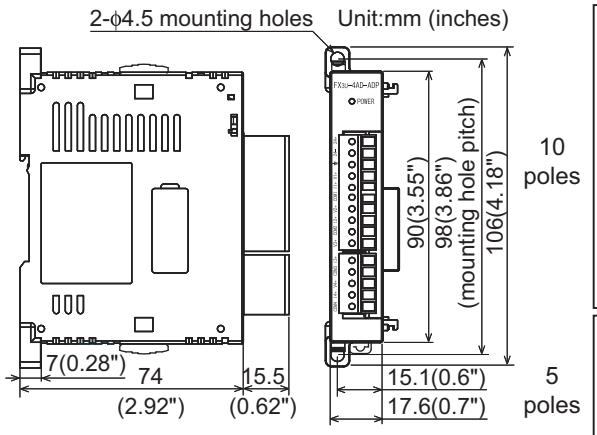

- MASS(Weight): 0.1kg (0.22lbs)
- Installation: DIN rail of 35 mm (1.38") in width or screws
- Accessories: Manual supplied with product
- Terminal block: European type

18.2.2 FX3U-4DA-ADP

External Dimensions, Terminal Layout

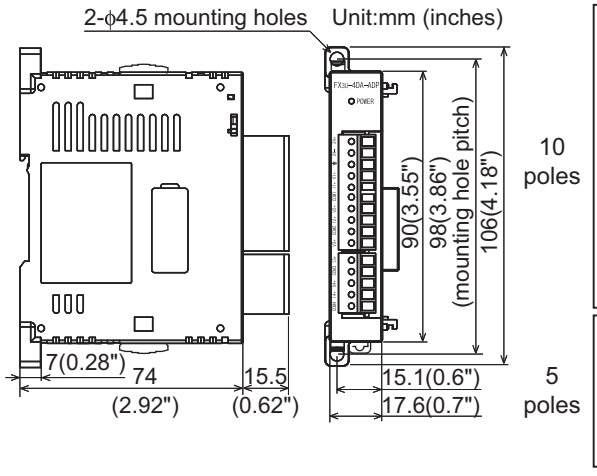

- MASS(Weight): 0.1kg (0.22lbs)
- Installation: DIN rail of 35 mm (1.38") in width or screws
- Accessories: Manual supplied with product
- Terminal block: European type

18.2.3 FX3U-4AD-PT(W)-ADP

External Dimensions, Terminal Layout

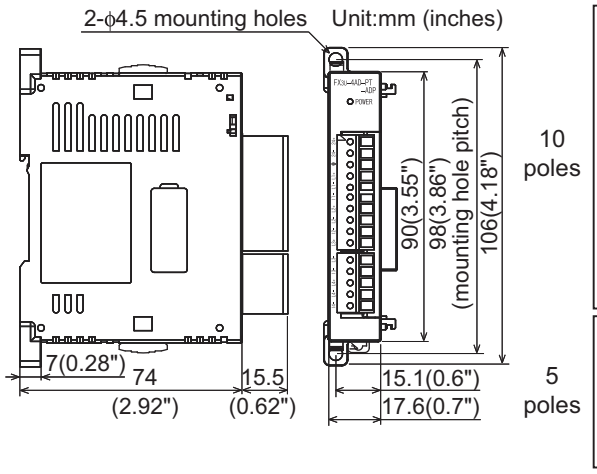

- MASS(Weight): 0.1kg (0.22lbs)
- Installation: DIN rail of 35 mm (1.38") in width or screws
- Accessories: Manual supplied with product
- Terminal block: European type

18.2.4 FX3U-4AD-PNK-ADP

External Dimensions, Terminal Layout

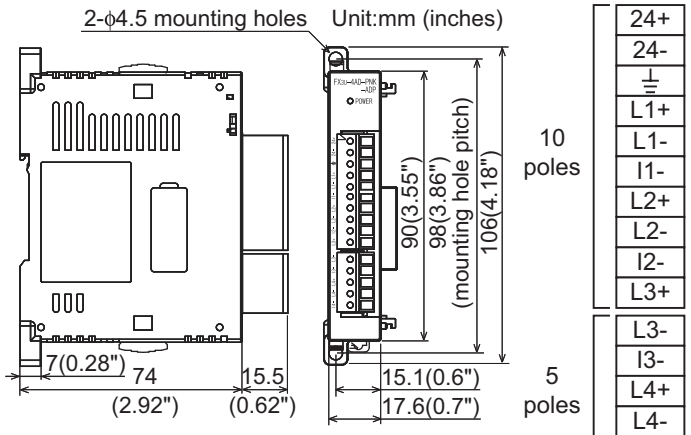

- MASS(Weight): 0.1kg (0.22lbs)
- Installation: DIN rail of 35 mm (1.38") in width or screws
- Accessories: Manual supplied with product
- Terminal block: European type

18.2.5 FX3U-4AD-TC-ADP

External Dimensions, Terminal Layout

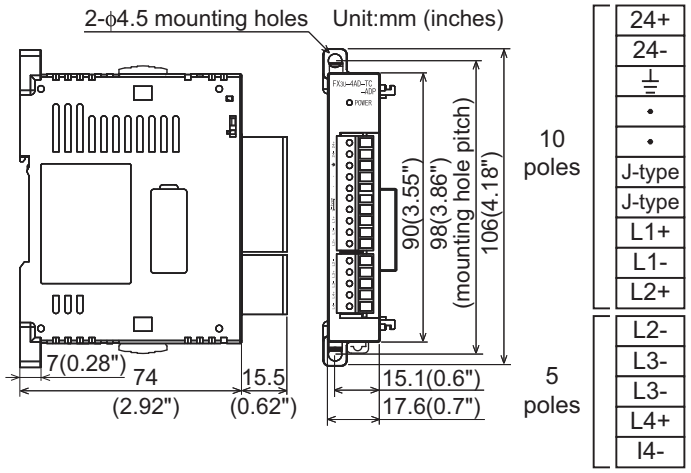

- MASS(Weight): 0.1kg (0.22lbs)
- Installation: DIN rail of 35 mm (1.38") in width or screws
- Accessories: Manual supplied with product
- Terminal block: European type

18.2.6 FX3U-232ADP(-MB)

External Dimensions

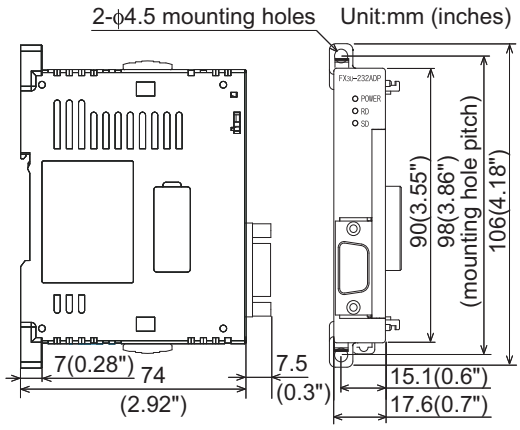

- MASS(Weight): 80g (0.18lbs)
- Installation: DIN rail of 35 mm (1.38") in width or screws
- Accessories: Manual supplied with product
- Connector: RS-232C (D-SUB 9-pin, male)

Terminal Layout

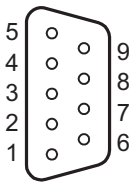

1	CD(DCD)
2	RD(RXD)
3	SD(TXD)
4	ER(DTR)
5	SG(GND)
6	DR(DSR)
7	Not used
8	Not used
9	Not used

18.2.7 FX3U-485ADP(-MB)

External Dimensions

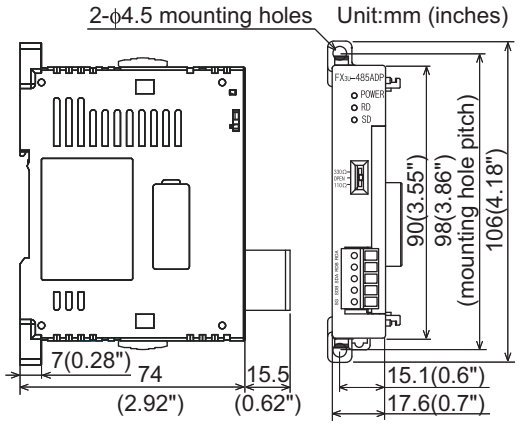

- MASS(Weight): 80g (0.18lbs)
- Installation: DIN rail of 35 mm (1.38") in width or screws
- Accessories: Label for indication of link station number, Manual supplied with product
- Terminal block: European type
- Terminal resistance: 330Ω/110Ω, built-in

Terminal Layout

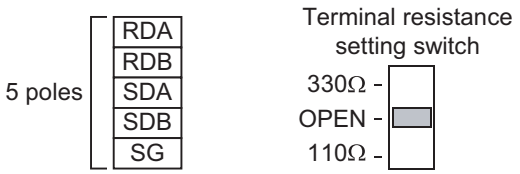

18.3 Expansion Board

18.3.1 FX3G-232-BD

External Dimensions

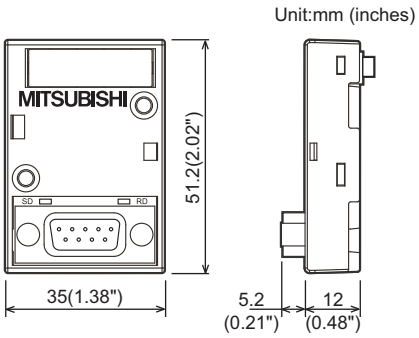

- MASS(Weight): 20g (0.05lbs)
- Accessories: Two M3×8 tapping screws (for installation of board), Side cover, Manual supplied with product
- Connector: RS-232C (D-SUB 9-pin, male)

Terminal Layout

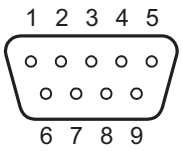

1	CD(DCD)
2	RD(RXD)
3	SD(TXD)
4	ER(DTR)
5	SG(GND)
6	DR(DSR)
7	Not used
8	Not used
9	Not used

18.3.2 FX3G-422-BD

External Dimensions

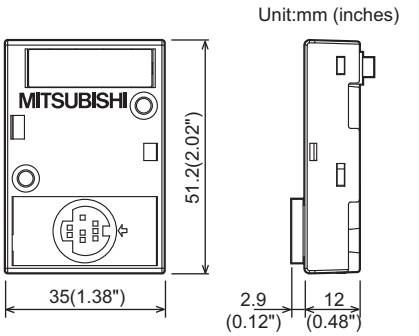

- MASS(Weight): 20g (0.05lbs)
- Accessories: Two M3×8 tapping screws (for installation of board), Side cover, Manual supplied with product
- Connector: RS-422 (MINI DIN 8-pin, female)

18.3.3 FX3G-485-BD

External Dimensions

Unit:mm (inches)

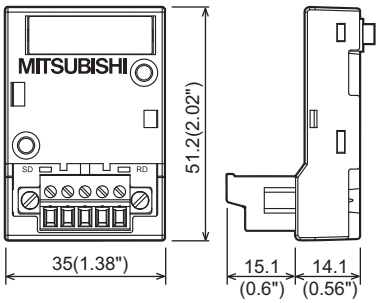

- MASS(Weight): 20g (0.05lbs)
- Accessories: Two M3×8 tapping screws (for installation of board), Side cover, Label for indication of link station number(2 types), Manual supplied with product
- Terminal block: European type
- Terminal resistance:330Ω/110Ω, built-in

Terminal Layout

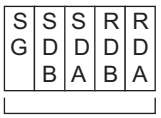

5 poles

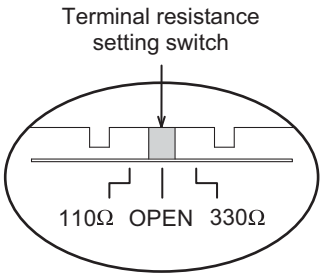

18.3.4 FX3G-2AD-BD

External Dimensions

Unit:mm (inches)

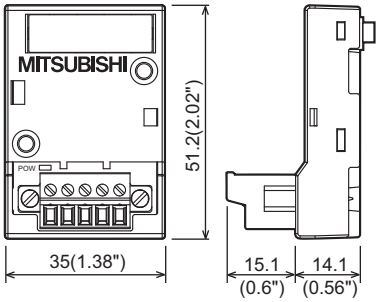

- MASS(Weight): 20g (0.05lbs)
- Accessories: Two M3×8 tapping screws (for installation of board), Side cover, Manual supplied with product
- Terminal block: European type

Terminal Layout

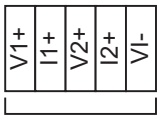

5 poles

18.3.5 FX3G-1DA-BD

External Dimensions

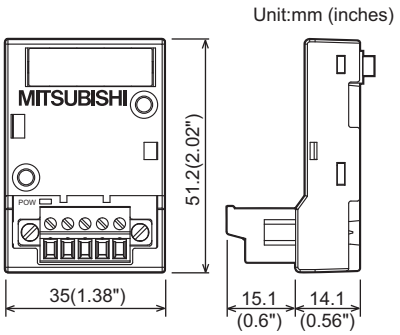

- MASS(Weight): 20g (0.05lbs)
- Accessories: Two M3×8 tapping screws (for installation of board), Side cover, Manual supplied with product
- Terminal block: European type

Terminal Layout

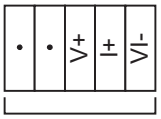

5 poles

18.3.6 FX3G-8AV-BD

External Dimensions

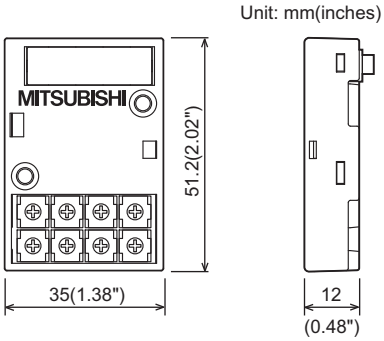

- MASS(Weight): 20g (0.05lbs)
- Accessories: Two M3×8 tapping screws (for installation of board), Side cover, Trimmer layout label, Manual supplied with product

Trimmer Layout

VR0	VR1	VR2	VR3
VR4	VR5	VR6	VR7

18.4 Power Supply

18.4.1 FX2N-20PSU

External Dimensions, Terminal Layout

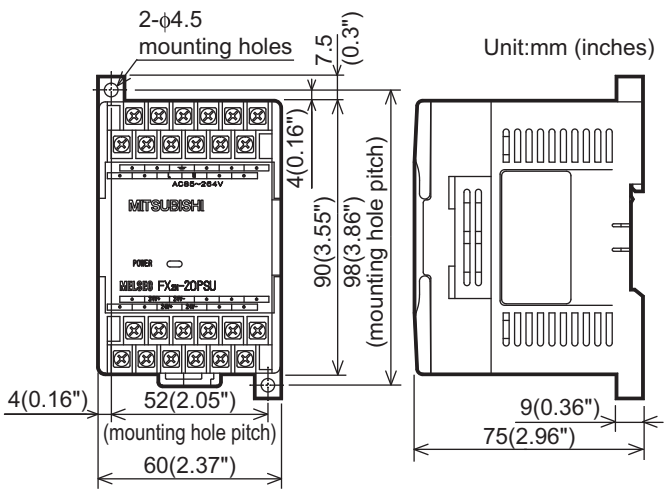

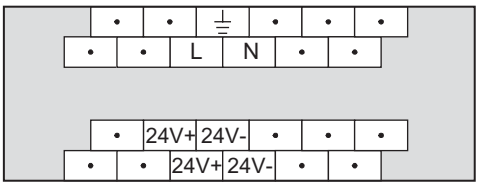

- MASS(Weight): 0.3kg (0.66lbs)
- Installation: DIN rail of 35mm (1.38") in width or screws
- Accessories: Manual supplied with product
- Terminal block: M3.5 screws

18.5 Connector Conversion Adapter

18.5.1 FX3G-CNV-ADP

External Dimensions

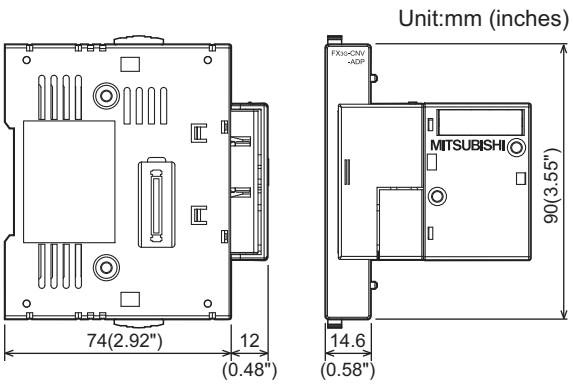

- MASS(Weight): 0.1kg (0.22lbs)
- Accessories: Four M3×8 tapping screws (for installation of adapter), Side cover, Manual supplied with product

18.5.2 FX2N-CNV-BC

External Dimensions

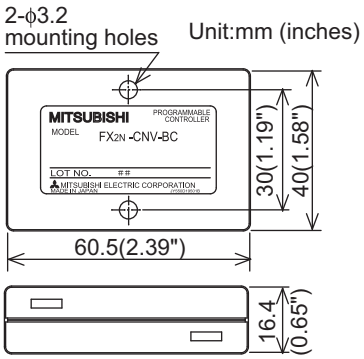

- MASS(Weight): 40g (0.09lbs)
- Installation: Screws only

18.6 Interface Module

18.6.1 FX-232AWC-H

External Dimensions

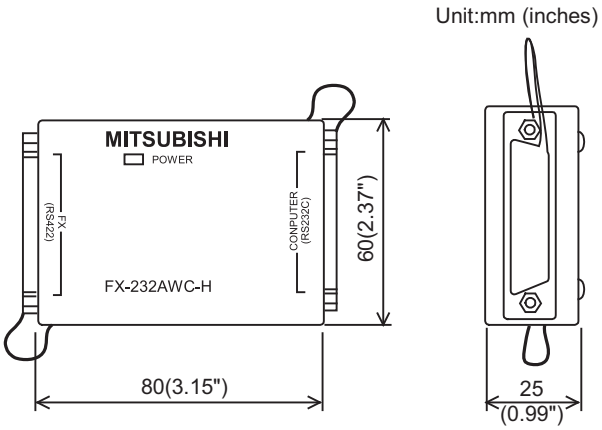

- MASS(Weight): 0.1kg (0.22lbs)
- Accessories: Manual supplied with product
- Connector: RS-232C
  (D-SUB 25-pin, female)
  RS-422
  (D-SUB 25-pin, female)

19. Display Module(FX3G-5DM)

STARTUP AND MAINTENANCE PRECAUTIONS **DANGER**

- Before modifying or disrupting the program in operation or running the PLC, carefully read through this manual and the associated manuals and ensure the safety of the operation.
  An operation error may damage the machinery or cause accidents.

STARTUP AND MAINTENANCE PRECAUTIONS **CAUTION**

- Do not disassemble or modify the PLC.
  Doing so may cause fire, equipment failures, or malfunctions.
  For repair, contact your local Mitsubishi Electric distributor.
- Turn off the power to the PLC before attaching or detaching the following devices.
  Failure to do so may cause equipment failures or malfunctions.
  - Display module, peripheral devices, expansion boards, and special adapters
  - Connector conversion adapter, extension blocks, and FX Series terminal blocks
  - Battery and memory cassette

19.1 Specifications

19.1.1 Applicable PLC

Model name	Applicability
FX3G Series	Ver.1.10 or later

19.1.2 Display/switch specifications

Item		Specifications
Display device		STN monochrome liquid crystal display
Backlight		Green LED backlight
Displaed letters	Number of letters	16 letters (half-width character) × 4 lines
	Characters	Alphabets, Numbers, Japanese character
	Language for menu display	English/Japanese
Button		4 operation buttons (OK, ESC, +, and -)

19.1.3 Part Names

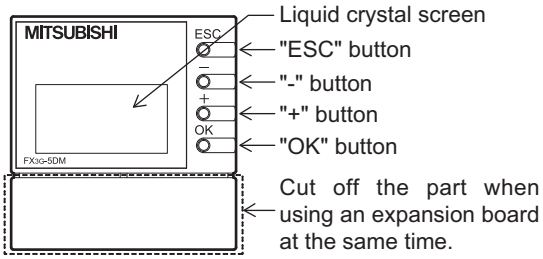

Functions of operation buttons

The display module has 4 operation buttons as shown in the following table.

Name of button	Function of operation button
ESC	Use this button to cancel the operation and to return to the previous screen.
-	Use this button to move the cursor or to set a numeric value.
+	Use this button to move the cursor or to set a numeric value.
OK	Use this button to select an item or to determine the set numeric value.

19.1.4 External Dimensions

Unit: mm(inches)

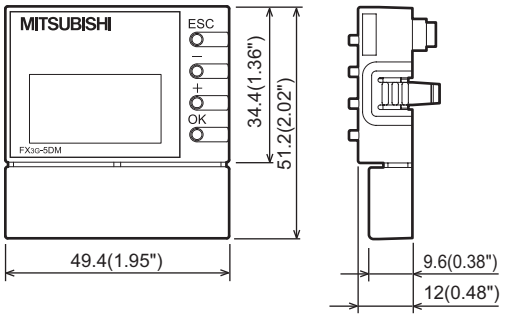

19.2 Installation and Removal

Be sure that the power is OFF when installing the display module.

19.2.1 Installation (when the expansion board/connector conversion adapter is not used together)

The FX3G-40MT/ES is used as the main unit in this example.

1 **Remove the top cover.**

Remove the top cover (A in the figure on the right) as shown in the right figure.

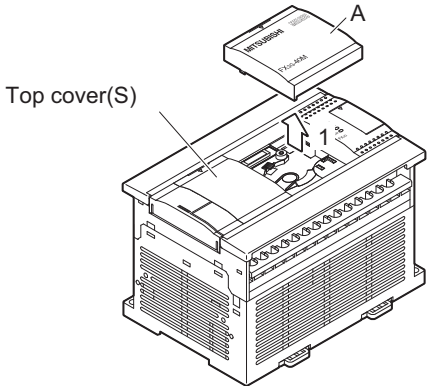

Caution:

Display module cannot attach in the top cover(S) side of a 40/60-point types main unit.

2 **Install/remove the display module.**

Attach the display module to the main unit as shown in the right figure (arrow 2).

Remove the display module while pressing and holding the display module fixing hook (B in the figure on the right) as shown in the right figure (arrow 2').

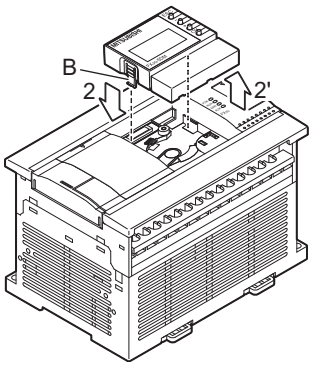

19.2.2 Installation (when the expansion board/connector conversion adapter is used together)

The FX3G-40MT/ES is used as the main unit and the expansion board is used together in this example.

1 Attach the expansion board/connector conversion adapter to the main unit.

→ **For the attachment method, refer to Chapter 8.**

Caution:

- Make sure to attach the expansion board/connector conversion adapter before the display module.
- The display module cannot be attached to the expansion board/connector conversion adapter attached on the top cover (S) side of the 40/60-point type main unit.

2 Remove the upper connector cover (A in the right figure).

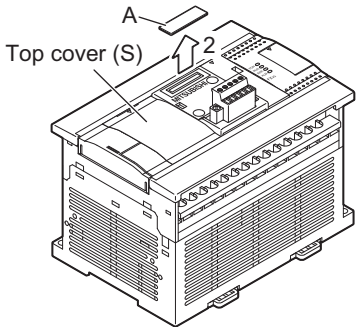

3 Remove the part B shown in the right figure using a snipper, etc.

Caution:

Removal of the part B is not necessary when the connector conversion adapter is used together and the main unit is the 14/24-point type.

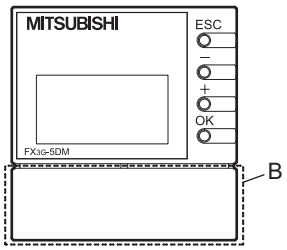

4 Attach the display module to the option connector of the expansion board/connector conversion adapter.

Attach the display module to the option connector (D in the figure on the right) of the expansion board/connector conversion adapter while pressing and holding the display module fixing hook (C in the figure on the right) as shown in the right figure (arrow 4).

Remove the display module while pressing and holding the display module fixing hook (C in the figure on the right) as shown in the right figure (arrow 4').

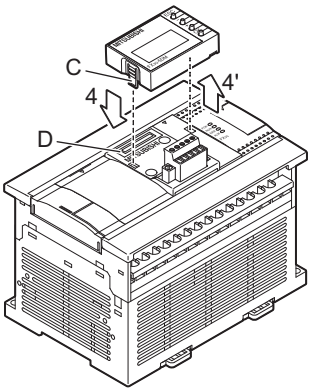

19.3 Summary of Functions

The display module functions are summarized below.

Item		Function	Remarks	Reference
Top screen (time display)		Displays the time indicated by the main unit's internal real-time clock.	Button operation	Subsection 19.4.2
Menu screen functions				
Monitor/Test		Input (X)*1, output (Y), auxiliary relay (M), state (S), timer (T), counter (C), data register (D) [16-bit/32-bit], extended register (R) [16-bit/32-bit], and extended file register (ER) [16-bit/32-bit] monitor/test function.	Button operation	Section 19.6
ErrorCheck		Performs error checks and displays the results.	Button operation	Section 19.7
LANGUAGE (selects the menu display language)		Selects either Japanese or English as the menu display language.	Button operation	Section 19.8
Contrast		Adjusts the contrast (-5 to 10); default setting: 0	Button operation	Section 19.9
ClockMenu	Display	Displays the current time.	Button operation	Subsection 19.10.1
	Setting	Sets the current time.	Button operation	Subsection 19.10.2
Keyword		The currently specified keyword can be canceled.	Button operation	Section 19.11
Cassette (Memory cassette transfer)		Allows data transfers between the internal EEPROM and the memory cassette.	Button operation	Section 19.12
Non-menu functions				
Specified device monitor function		Displays the monitor/test screen for a specified device at the top.	Requires program	Section 19.14
Screen saver function		Displays the screen saver if key operation is not given for specified period of time.	Requires program*3	Section 19.15
Display screen protect function		Enables all functions, prohibits change (test) functions, and protects the top screen (time display).	Requires program	Section 19.16
Operation button ON/OFF information		Allows monitoring of operation button ON/OFF status.	Requires program or monitor	Section 19.17
Hexadecimal current value display setting		Changes the display format of the current values and setting values for the timer, counter, data register, extended register, and extended file register to a hexadecimal display format.	Requires program*2	Section 19.18

*1. There is no test function for "Input (X)".

*2. A sequence program is required to enable a hexadecimal display of the timer (T), counter (C), data register (file register) (D) [16-bit/32-bit], extended register (R) [16-bit/32-bit], and extended file register (ER) [16-bit/32-bit] current values.

→ **Refer to Section 19.19 for the setting procedure.**

*3. When no setting is made within a program the screen saver function becomes effective after 10 minutes.

→ **Refer to Section 19.15 for screen saver function.**

19.4 Procedure for Accessing the Menu Screen from the Title Screen

All operation explanations and display screen examples in this manual are in English. When the menu display language is set to Japanese, please convert the screen messages to their Japanese translations.

→ **Refer to Section 19.20 for the Japanese and English display character correspondence table.**
→ **Refer to Section 19.8 for menu display language setting.**

19.4.1 Title screen

The screen shown at right is displayed for 1.5 seconds after the power is turned on.

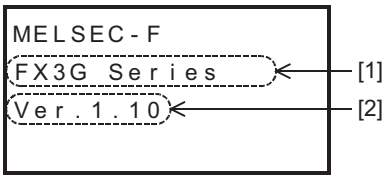

	Content
[1]	Model name
[2]	Version

19.4.2 Top screen (time display)

Following the title screen display, the "Current Time screen" is then displayed.

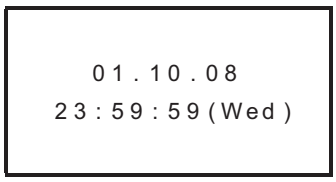

The specified device monitor screen is displayed instead when the specified device monitor function is used.

→ **Refer to Section 19.14 for details of the specified device monitor function.**

Although the year displays in a 2-digit format (08), this can be changed to a 4-digit format (2008) by revising the program.

→ **Refer to Subsection 19.10.3 for the 2-digit year to 4-digit year change procedure.**

19.4.3 Menu screen

As shown in the figure at right, the menu screen displays 4 lines of the total menu. Press the [+] button to scroll downward through the menu.

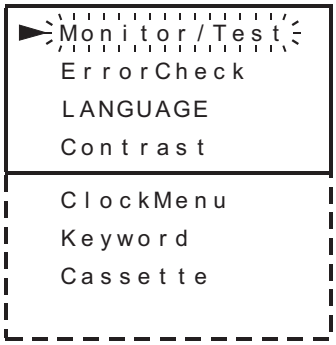

Button operations at this menu screen are explained below.

Button	Operation Description
ESC	Returns to the "top screen" (time display).
-	Scrolls upward through the menu. Hold for 1 second or longer for high-speed scrolling. This button is disabled when the cursor is located at the beginning of the menu.
+	Scrolls downward through the menu. Hold for 1 second or longer for high-speed scrolling. This button is disabled when the cursor is located at the end of the menu.
OK	Selects the item where the cursor is blinking.

19.5 Menu Structure

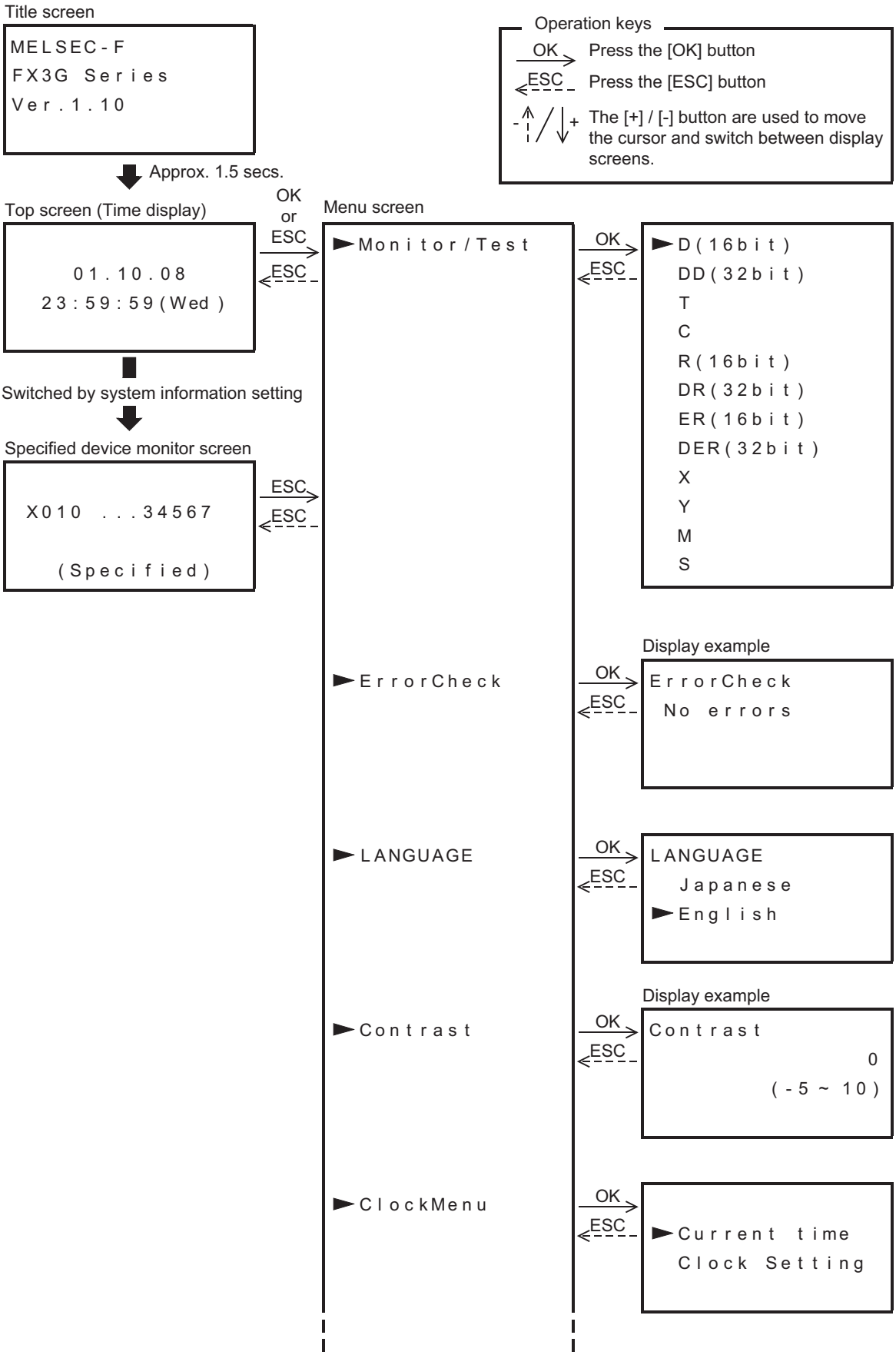

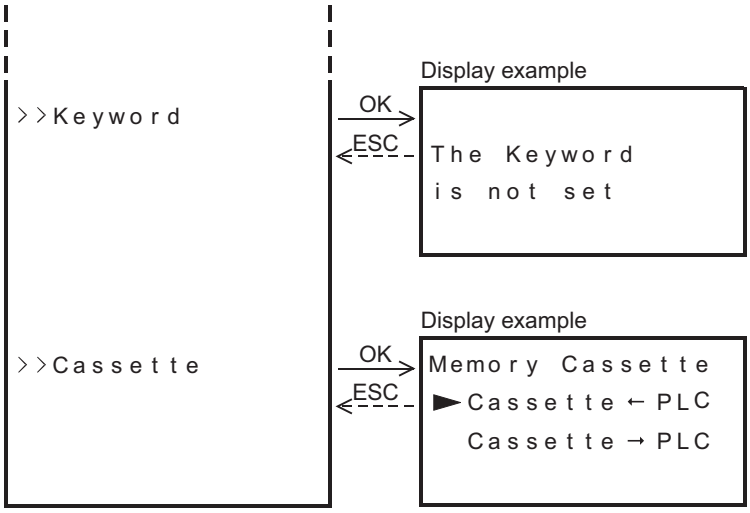
Display example
>>Keyword
OK
ESC
The Keyword
is not set
Display example
>>Cassette
OK
ESC
Memory Cassette
►Cassette ← PLC
Cassette → PLC

19.6 Monitor/Test Mode

19.6.1 Relevant devices

Monitoring and testing can be performed from the "Monitor/Test" menu for the devices listed below.
(Monitoring/testing is not possible for the file register (D) and the index register (V/Z)).

✓: Possible △: Possible under certain conditions
☐: Not possible -: Item not supported by this device

Device	Monitored Items					Test Items		
	Contact	Reset	Operation Direction	Current Value	Setting Value	Forced ON/OFF	Current Value Change	Setting Change
Input [X]	✓	-	-	-	-	-	-	-
Output [Y]	✓	-	-	-	-	△*1	-	-
Auxiliary relay [M]	✓	-	-	-	-	△*1	-	-
State [S]	✓	-	-	-	-	△*1	-	-
Timer [T]	✓	✓	-	✓	✓	✓	✓	△*2
Counter [C]	✓	✓	✓*3	✓	✓	✓	✓	△*2
Data register [D, DD]	-	-	-	✓	-	-	✓	-
File register [D, DD]	-	-	-	☐	-	-	☐	-
Extended register [R, DR]	-	-	-	✓	-	-	✓	-
Extended file register [ER, DER]*4	-	-	-	✓	-	-	✓	-
Index register (V, Z)	-	-	-	☐	-	-	☐	-

*1. A forced ON or OFF is executed for only one operation cycle, and therefore has a considerable effect on the SET/RST and self retaining circuits when the PLC is running.
Moreover, a forced ON/OFF result is retained for devices (Y,M,S) which are not being driven by an OUT instruction, etc., in the program.

*2. Setting values of timer and counter can be changed when the PLC status is as shown below.

Program Memory Type		RUN/STOP Status	Setting Change Enabled/Disabled
Internal EEPROM		RUN	Enabled
		STOP	Enabled
Memory cassette	PROTECT switch ON	RUN	Disabled
		STOP	Disabled
	PROTECT switch OFF	RUN	Enabled
		STOP	Enabled

*3. The C200 to C255 32-bit up/down counters and the high-speed counters have counting directions.

*4. Extended file registers stored in the EEPROM in the main unit, or extended file registers stored in the EEPROM inside the memory cassette when the memory cassette is attached.

19.6.2 Monitor mode operation

This section explains the procedure for monitoring the input [X], output [Y], auxiliary relay [M], state [S], timer [T], counter [C], data registers [D, DD], extended registers [R, DR], and the extended file registers [ER, DER]. The file register [D] and the index registers [V,Z] cannot be monitored.

→ **Refer to Subsection 19.6.3 for a monitor screen display example.**
→ **Refer to Section 19.14 for specified device monitor operation procedures.**
→ **Refer to Section 19.18 for the procedure used to display the timer, counter, and data register current values as hexadecimal values.**

1) At the menu screen, use the [+] and [-] buttons to move the cursor to the "Monitor/Test" item, then press [OK] to display the "device selection screen" shown at right.
   To cancel the operation and return to the "top screen (time display)", press [ESC] at the menu screen.
2) Use the [+] and [-] buttons to move the cursor to the device which is to be monitored.
   To cancel the operation and return to the "menu screen", press [ESC].

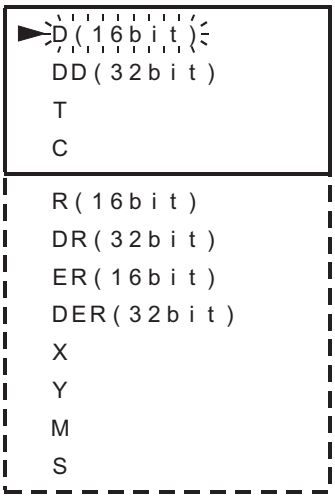

3) Press [OK] to display the monitor screen for the device which was selected for monitoring.
   To cancel the operation and return to the "device selection screen", press [ESC].
   After the power is turned on, the number of the device to be displayed is shown as follows.
   a) The first time the power is turned on, the display begins with device No.1.
   b) At subsequent power ONs, the device which was being monitored at the previous operation is displayed (they are saved in memory for each device type).
4) Use the [+] and [-] buttons to move the cursor or the screen to the until the device to be monitored is displayed.

→ **Refer to Subsection 19.6.3 for status display.**

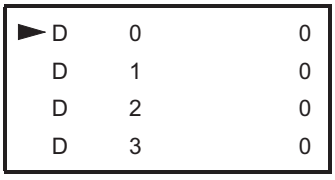

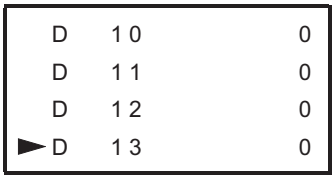

Selected Device Type	Button	Operation Description
• All devices	ESC	Returns to the "device selection screen".
• Data registers (D, DD) • Extended registers (R, DR) • Extended file registers (ER, DER) • Timer (T) • Counter (C)	-	Scrolls upward. Press for 1 second or longer for high-speed scrolling. If pressed again at the beginning of the device No. list, the display jumps to the end of the device No. list.
	+	Scrolls downward. Hold for 1 second or longer for high-speed scrolling. If pressed again at the end of the device No. list, the display jumps to the beginning of the device No. list.
• Input (X) • Output (Y) • Auxiliary relay (M) • State (S)	-	Scrolls the display screen upward. Hold for 1 second or longer for high-speed scrolling. If pressed again at the beginning of the device No. list, the display jumps to the end of the device No. list.
	+	Scrolls the display screen downward. Hold for 1 second or longer for high-speed scrolling. If pressed again at the end of the device No. list, the display jumps to the beginning of the device No. list.
• All devices except (x)	OK	Switches to the test mode when hold for 1 second or longer.

19.6.3 Monitor screen and status display

→ **Refer to Section 19.18 for the procedure used to display the current values as hexadecimal values.**

1. Data register [D (16-bit)] / extended register [R (16-bit)] / extended file register [ER (16-bit)]

	Display Content
[1]	Device No.
[2]	Current value

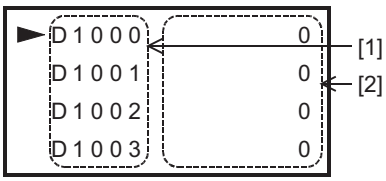

2. Data register [DD (32-bit)] / extended register [DR (32-bit)] / extended file register [DER (32-bit)]

	Display Content
[1]	Device No. [Upper 16-bit device No. (odd number)] [Lower 16-bit device No. (even number)]
[2]	Current value

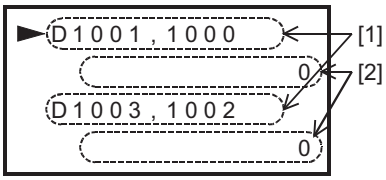

File register (D):
The file register (D) current value cannot be directly monitored at the display module.

3. Timer [T]

	Display Content
[1]	Device No.
[2]	Contact image ON: ■ OFF: Blank
[3]	Reset image ON: ■ OFF: Blank
[4]	Current value
[5]	Setting value*1

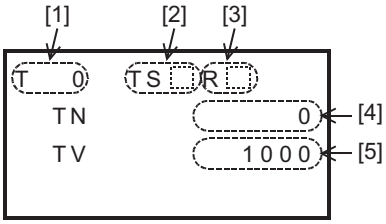

*1. When not using it in a program, a setting value is displayed as "-----".

4. Counter [C]

	Display Content
[1]	Device No.
[2]	Contact image ON: ■ OFF: Blank
[3]	Reset image ON: ■ OFF: Blank
[4]	Count direction display UP count: ■ DOWN count: Blank (32-bit up/down counter and high-speed counter only)
[5]	Current value
[6]	Setting value*1

*1. When not using it in a program, a setting value is displayed as "-----".

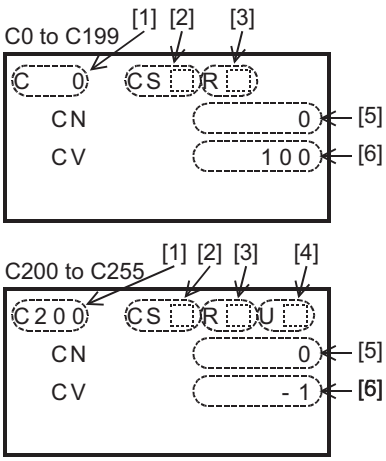

5. Input [X] / Output [Y] / Auxiliary Relay [M] / State [S]

	Display Content
[1]	Device No. at beginning of line. Input (X) and output (Y): 8 points per line. Auxiliary relay (M), special auxiliary relay (M), and state (S): 10 points per line.
[2]	ON/OFF status ON: Last digit of device No.. OFF: " . ".

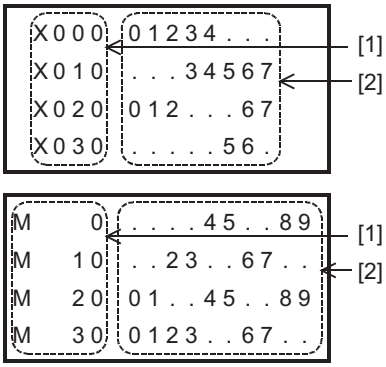

19.6.4 Test mode operation

There are 3 types of test mode operations, depending on the device type. The 3 operations are explained below.

→ **Refer to Subsection 19.6.1 for test mode subject devices.**

1. Data registers [D: D (16-bit), DD (32-bit)] / extended registers [R: R (16-bit), DR (32-bit) / extended file registers [ER: ER (16-bit), DER (32-bit)]

1) Perform a monitor mode operation to display the device whose current value is to be changed.
→ **Refer to Subsection 19.6.2 for monitor function operation.**

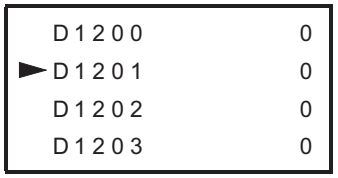

2) Hold the [OK] button for 1 second or longer to switch to the test mode. The current value begins blinking (refer to fig. at right).

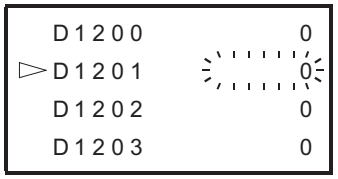

3) Use the [+] / [-] buttons to change the value as desired.
To cancel the operation and return to the "monitor screen", press [ESC].

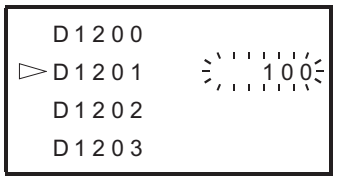

Button	Operation Description
ESC	Cancels the operation and returns to the "monitor screen".
-	Reduces the value. Hold for 1 second or longer for high-speed reduction.
+	Increases the value. Hold for 1 second or longer for high-speed increase.
OK	Registers the current value and returns to the "monitor screen".

4) Press [OK] to register the current value and return to the "monitor screen".

- File register (D)
The display module's test function cannot be used to change the current value of the file register (D) which is stored in the program memory.

2. Timer [T], counter [C]

1) Perform a monitor mode operation to display the device where the test function is to be used. However, when not using it in a program, a setting value is displayed as "-----". Test function cannot be used.
   → **Refer to Subsection 19.6.2 for monitor function operation.**

[Monitor screen]

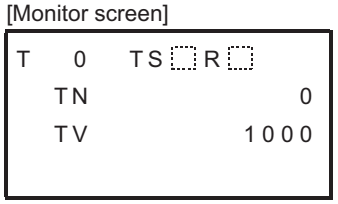

2) Press the [OK] button to display the cursor, then select the "test subject selection screen".
   To cancel the operation and return to the "monitor screen", press [ESC].

[Test subject selection screen]

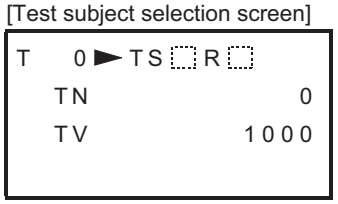

3) Use the [+] / [-] buttons to select the test subject.
   To cancel the operation and return to the "monitor screen", press [ESC].

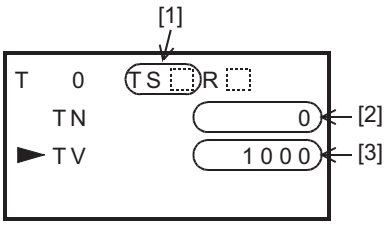

Test Subject	Test Description
[1]	Contact forced ON/OFF
[2]	Current value change
[3]	Setting value change

4) Hold the [OK] button for 1 second or longer to register the test subject selection, and switch to the test mode.
   To cancel the operation and return to the "test subject selection screen", press [ESC]

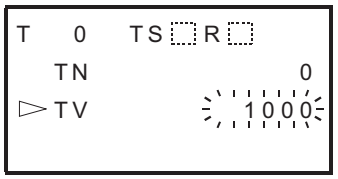

Test Subject	Status when [OK] is hold for 1 second or longer
[1]	No change
[2]	Numeric value begins blinking.
[3]	

5) Operation varies as shown below, depending on the selected test subject.
   a) For "contact forced ON/OFF"
   The contact ON/OFF status is highlighted when [OK] is pressed.

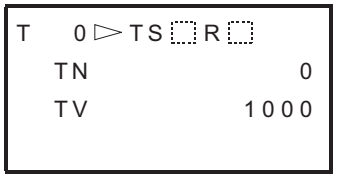

Button	Operation Description
ESC	Returns to the "test subject selection screen".
-	Disabled
+	Disabled
OK	Highlights the contact ON/OFF status, meaning the current value can not be changed.

   b) For "current value change","setting value change"
   Use the [+] / [-] buttons to change the value as desired, then press [OK] to register the changed value.

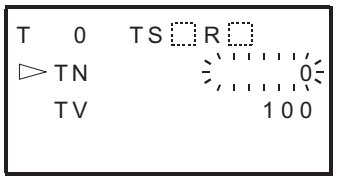

Button	Operation Description
ESC	Cancels the operation and returns to the "test subject selection screen".
-	Reduces the value. Hold for 1 second or longer for high-speed reduction.
+	Increases the value. Hold for 1 second or longer for high-speed increase.
OK	Registers the current value or the setting value and returns to the "test subject selection screen".

6) After the setting operation is completed, return to the "test subject selection screen", where the [ESC] button can then be pressed to return to the "monitor screen".

3. Output [Y] / auxiliary relay [M] / special auxiliary relay [M] / state [S]

Forced ON/OFF operations are possible for the output [Y] / auxiliary relay [M] / special auxiliary relay [M] / state [S] contacts.

1) Perform a monitor mode operation to display the device whose ON/OFF status is to be changed.
   → **Refer to Subsection 19.6.2 for monitor function operation.**

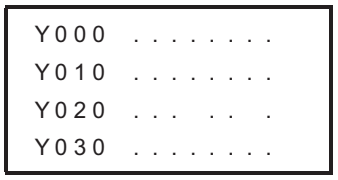

2) Hold the [OK] button for 1 second or longer to switch to the test mode. The device then begins blinking (refer to figure at right).
To cancel the operation and return to the "test subject selection screen", press [ESC].

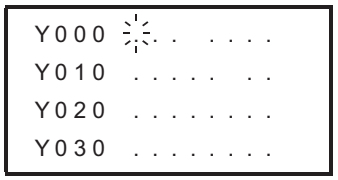

3) Use the [+] / [-] buttons to move the blinking position to the device where a forced ON/OFF is desired.
To cancel the operation and return to the "monitor screen", press [ESC].

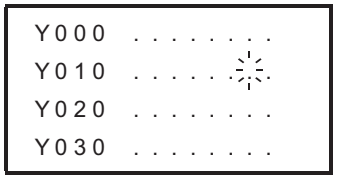

Button	Operation Description
ESC	Cancels the operation and returns to the "monitor screen".
-	Moves in the lower device No. direction (for forced ON/OFF subject selection). Hold for 1 second or longer for high-speed scrolling.
+	Moves in the higher device No. direction (for forced ON/OFF subject selection). Hold for 1 second or longer for high-speed scrolling.

4) Press the [OK] button to highlight the contact's ON/OFF status.
Return to the "monitor screen", press [ESC].

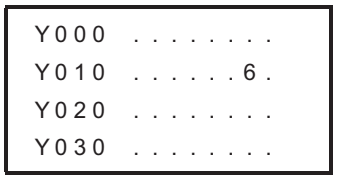

Button	Operation Description
ESC	Returns to the "monitor screen".
-	Moves in the lower device No. direction (for forced ON/OFF subject selection). Hold for 1 second or longer for high-speed scrolling.
+	Moves in the higher device No. direction (for forced ON/OFF subject selection). Hold for 1 second or longer for high-speed scrolling.
OK	Highlights the contact ON/OFF status.

5) Press [ESC] to return to the monitor screen.

19.6.5 Test mode operation notes

1. **When using multiple same-number timers (T) and counters (C).**
   Operation occurs as follows if multiple timers [T] and counters [C] are used in programs which contain CJ instructions and step ladders.
   - When a setting change is performed after switching from the device monitor to the test function mode, the setting change is applied to the timer [T] or counter [C] which is nearest to Step 0.
   - When changing the setting values for same-number timers [T] and counters [C], use the programming tool to change the program.

2. **When the set values of timers (T) and counters (C) are specified indirectly**
   When the set values of timers (T) and counters (C) are specified indirectly in programs, the values of indirectly specified devices change if the set values of timers (T) and counters (C) are changed in the display module.

3. **When changing the values of extension file registers (ER and DER)**
   When the value of an extension file register (ER or DER) is changed, such a change is counted as write to the EEPROM memory. Be careful not to exceed the allowable number writes.
   The allowable number of writes is 10,000 or less for the memory cassette (EEPROM), and 20,000 or less for the built-in memory (EEPROM).

19.7 Error Check

The main unit's error status displays at the "ErrorCheck" menu.

1) At the menu screen, use the [+] / [-] buttons to move the cursor to the "ErrorCheck" item, then press [OK].
   The error check result then displays at the "error display screen" (refer to fig. at right).
   To cancel the operation and return to the "top screen (time display)", press [ESC] at the menu screen.

2) If multiple errors have occurred, the [+] / [-] keys can be used to switch between the error display pages.

Button		Operation Description
ESC		Returns to the "menu screen".
-	1 error or less	Disabled
	2 errors or more	Displays the previous-page's error screen.
+	1 error or less	Disabled
	2 errors or more	Displays the next-page's error screen.
OK		Returns to the "menu screen".

Display Content

	Display Content
[1]	Active error flag
[2]	Error code
[3]	Number of concurrent errors (displays only when multiple errors have occurred)

3) To cancel the operation and return to the "menu screen", press [ESC].

When no errors have occurred



When 1 error has occurred

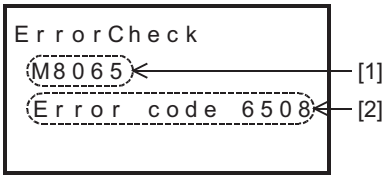

When multiple errors have occurred

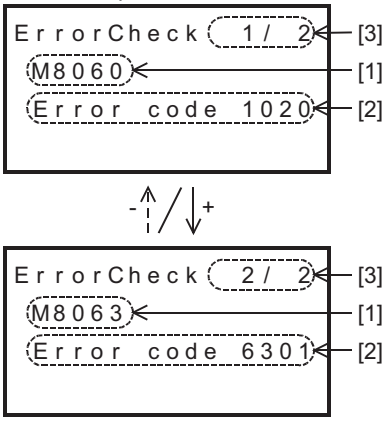

19.8 LANGUAGE (Menu Display Language Setting)

The language used at the display module menus is specified at the "LANGUAGE" menu. The language setting procedure is described below.
All operation explanations and display screen examples in this manual are in English. When the menu display language is set to Japanese, please convert the screen messages to their Japanese translations.

→ **Refer to Section 19.20 for the Japanese and English display character correspondence table.**

19.8.1 Changing to Japanese menus

The procedure for changing from English menus to Japanese menus is described below.

1) Turn the PLC power on.
Following a brief title screen display (1.5 seconds), the "top screen (time display)" or a "specified device monitor screen" is displayed.

Title screen



Approx. 1.5 secs.

Top screen (Time display)

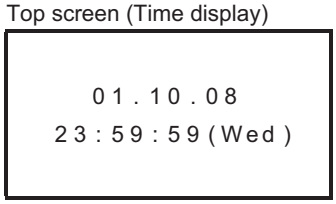

or

Specified device monitor screen (example)

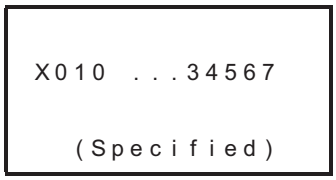

2) Press the [ESC] button when the specified device screen is displayed.
Press the [OK] or [ESC] button when the time is displayed.
Then, the menu screen shown on the right appears.
Four lines out of the whole menu are displayed at one time on the menu screen.

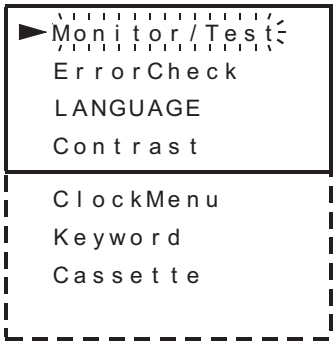

3) At the menu screen, use the [+] / [-] buttons to move the cursor to the "LANGUAGE" item, then press [OK] to display the "display language selection screen".
To cancel the operation and return to the "top screen (time display)", press [ESC].

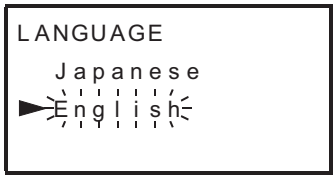

4) Use the [+] / [-] buttons to move the cursor to Japanese.
To cancel the operation and return to the "menu screen", press [ESC].

Button	Operation Description
ESC	Cancels the operation and returns to the "menu screen".
-	Moves the cursor upward.
+	Moves the cursor downward.
OK	Registers the selected display language and returns to the "menu screen".

5) Press [OK] to register the selected display language and return to the "menu screen".

19.8.2 Changing to English menus

Refer to 19.8.1 Changing to Japanese menus for the access procedure from the title screen.

1) At the menu screen, use the [+] / [-] buttons to move the cursor to the "LANGUAGE" item, then press [OK] to display the "display language selection screen".
To cancel the operation and return to the "top screen (time display)", press [ESC].

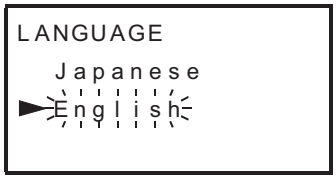

2) Use the [+] / [-] buttons to move the cursor to "English".
To cancel the operation and return to the "menu screen", press [ESC].

Button	Operation Description
ESC	Cancels the operation and returns to the "menu screen".
-	Moves the cursor upward.
+	Moves the cursor downward.
OK	Registers the selected display language and returns to the "menu screen".

3) Press [OK] to register the selected display language and return to the "menu screen".

19.8.3 D8302 changes by program and related devices

Selections made at this menu are saved at D8302. A Language setting of "1" is specified at factory default. D8302 changes by user program can also be specified.

D8302*1 Current Value	Display Language
K0	Japanese
K1	English
Other	English

*1. Latch device

When the display language is set to "Japanese"

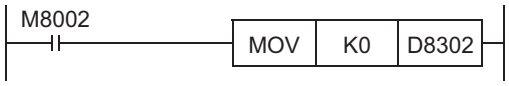

19.9 Contrast

The liquid crystal display contrast setting is specified at the "Contrast" menu. Selections made at this menu are saved at D8302. A contrast setting of "0" is specified at factory default.

1) At the menu screen, use the [+] / [-] buttons to move the cursor to the "Contrast" item, then press [OK] to display the "contrast adjustment screen".
To cancel the operation and return to the "top screen (time display)", press [ESC].

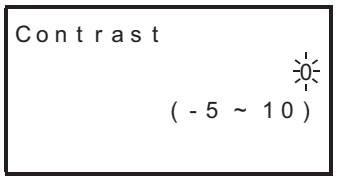

2) Use the [+] / [-] buttons to adjust the contrast.
To cancel the operation and return to the "menu screen", press [ESC].

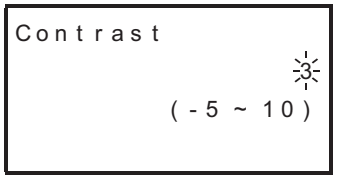

Button	Operation Description
ESC	Cancels the operation and returns to the "menu screen".
-	Lowers the contrast (decreases the numeric value. The value can be decreased to -5.)
+	Increases the contrast (increases the numeric value. The value can be increased to +10.)
OK	Registers the selected setting and returns to the "menu screen".

3) Press the [OK] button to register the selected setting and return to the "menu screen".

19.10 Clock Menu (Current Time Setting)

The "ClockMenu" menu consists of "current time" and the "clock setting" items.
The current time should be set before operating the system.

19.10.1 Clock setting procedure

1) At the menu screen, use the [+] / [-] buttons to move the cursor to the "ClockMenu" item, then press [OK] to display the selection screen shown at right.
To cancel the operation and return to the "top screen (time display)", press [ESC].

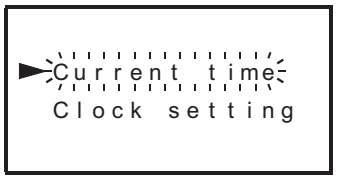

2) Use the [+] / [-] buttons to move the cursor to the "Clock setting" item.
To cancel the operation and return to the "menu screen", press [ESC].

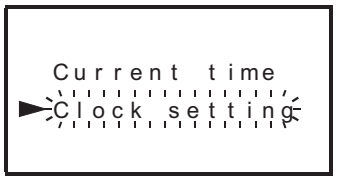

3) Press the [OK] button to display the "Clock setting screen".
To cancel the operation and return to the "selection screen", press [ESC].

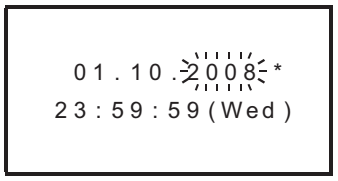

4) Use the [+] / [-] buttons to change the blinking data as desired, then press [OK] to register the change.
Settings are performed in the following sequence: Year → Month → Day → Hours → Minutes → Seconds.
After pressing [OK] to register the final "seconds" setting, a "Current time is set" message is displayed, completing the current time setting procedure.

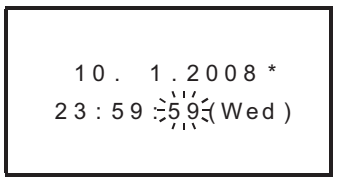

The default "Year" display is a 2-digit value indicating the Western calendar year.

Button	Operation Description
ESC	Returns to the previous setting item. Returns to the "selection screen", when at the "Year" item ("Year" is blinking) position.
-	Reduces the value. Hold for 1 second or longer for high-speed reduction.
+	Increases the value. Hold for 1 second or longer for high-speed increase.
OK	Proceeds to the next setting item. "Current time is set" message displays if pressed at the "Seconds" item ("Seconds" is blinking).

5) Press [OK] or [ESC] to return to the "selection screen".

6) Press [ESC] to return to the "menu screen".

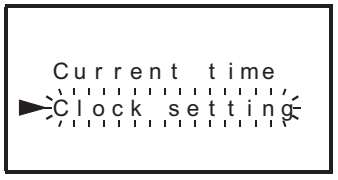

19.10.2 Displaying the current time

1) At the menu screen, use the [+] / [-] buttons to move the cursor to the "ClockMenu" item, then press [OK] to display the selection screen shown to the right.
To cancel the operation and return to the "top screen (time display)", press [ESC].

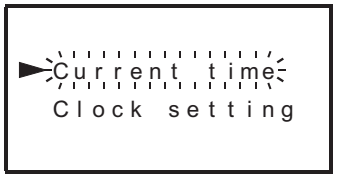

2) Use the [+] / [-] buttons to move the cursor to the "Current time" item.
To cancel the operation and return to the "menu screen", press [ESC].

3) Press the [OK] button to display the current time.
To cancel the operation and return to the "selection screen", press [ESC].

Button	Operation Description
ESC	Returns to the "selection screen".
-	Disabled
+	Disabled
OK	Returns to the "selection screen".

2-digit display

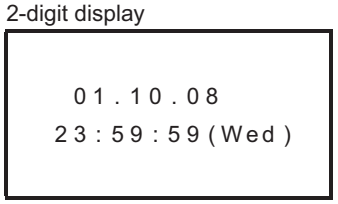

4-digit display

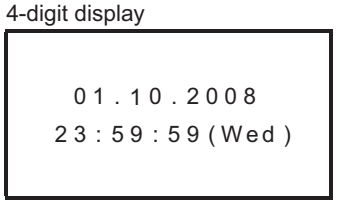

4) Press [OK] or [ESC] to return to the "selection screen".

5) Press [ESC] to return to the "menu screen".

19.10.3 Changing the current time's "Year" from 2-digit format to 4-digit format

The "Year" data displays as 2-digit value with a default. This can be changed to a 4-digit display by the following programming.

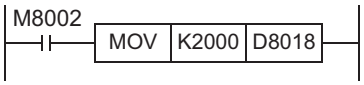

It is also possible to set the current time with a sequence program.
→ **Refer to the "time setting" (special devices D8013 to D8019) section of the Programming Manual.**

19.11 Keyword

Keywords registered at the PLC can be canceled from the "Keyword" menu.
When canceled, all operations are enabled.
Registering or changing keywords is not possible at the display module.
The programming tool must be used in advance to register new keywords.

19.11.1 Keyword types and levels

Keywords can be entered in 2 ways (8-digit or 16-digit*1), depending on the peripheral device in question.

- For a [keyword (8-digit)] + [2nd keyword (8-digit)] = 16-digit input:
  Processing is possible only with a peripheral device version compatible with the FX3G PLC.
- For an keyword (8-digit) input only:
  Processing is possible even with a peripheral device version that is not compatible with the FX3G PLC.

Number Of Digits	Registration Method	Peripheral Device		Keyword Registration Level	Keyword Description
		FX3G Compatible	Not FX3G Compatible		
16-digit *1	By selecting the keyword registration level at the GX Developer's setting screen.	✓	-	Reading/writing prohibited Writing prohibited All online operations prohibited	16-digit hexadecimal value (A to F, 0 to 9) [Ex] FAB05C25DAECF293 AABCDEFF34509345
8-digit	By entering the level at the first character when entering the keyword	✓	✓	A (A, 0 to 9 first char.)	8-digit hexadecimal value beginning with "A" or "0 to 9". [Ex]0ABCDEF2, AABCD345
				B	8-digit hexadecimal value beginning with "B". [Ex]B1234567,BABCDEF7
				C	8-digit hexadecimal value beginning with "C". [Ex]C8904567,CDEF567F

*1. Customer keyword/Permanent PLC lock included

19.11.2 Level-specific restrictions screen list

✓: Function enabled
△: Timer and counter setting values cannot be changed.
▲: Only monitor function is usable (test function is not available)
-: Function disabled

Function name		None	Keyword: 8 digits Label entered as the first character at Keyword input			Keyword: 16 digits Selected at GX Developer setting screen*1		
			A	B	C	All online operations prohibited	Writing prohibited	Reading/ writing prohibited
Top screen (time display)		✓	✓	✓		✓	✓	
Top screen (Specified device monitor)		✓	▲	△		▲	△	
Monitor/Test		✓	-	△		-	△	
ErrorCheck		✓	-	✓		-	✓	
Menu display language setting		✓	-	✓		-	✓	
Contrast adjustment		✓	-	✓		-	✓	
Time	Display	✓	✓	✓		✓	✓	
	Setting	✓	-	✓		-	✓	
Keyword (cancel)		-	✓	✓		✓	✓	
Memory cassette transfer		✓	-	-		-	-	
Display screen protect function		✓	-	-		-	-	

*1. Customer keyword/Permanent PLC lock included

19.11.3 Keyword storage

The system has no process for recovering registered keyword which are forgotten.
Therefore, be sure to store the keywords in a secure location.

19.11.4 Screens requiring keyword for access

At the menu screen, use the [+] / [-] buttons to move the cursor to the "Keyword" item, then press [OK] to display one of the 4 screens shown below (the screen that displays depends on the keyword status).
If no keywords are registered, press [ESC] to return to the "menu screen".
To cancel the operation and return to the "top screen (time display)", press [ESC].

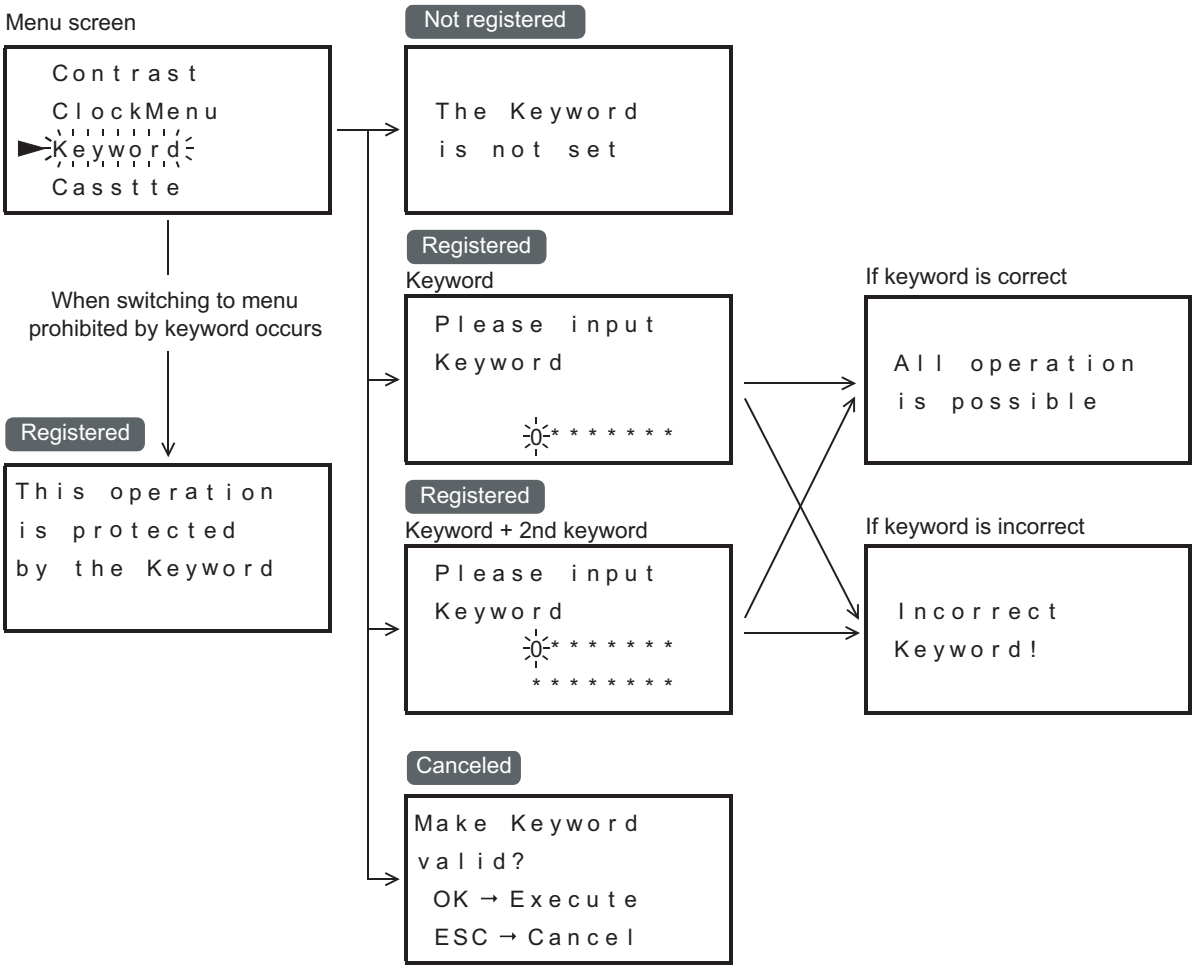

19.11.5 Canceling a keyword

1) At the menu screen, use the [+] / [-] buttons to move the cursor to the "Keyword" item, then press [OK] to display the "keyword input screen".
   If a keyword has been registered, one of the following screens is displayed.
   - If a 16-digit keyword is registered, an 8-digit × 2-line screen (shown at left below) is displayed.
   - If an 8-digit keyword is registered, an 8-digit × 1-line screen (shown at right below) is displayed.

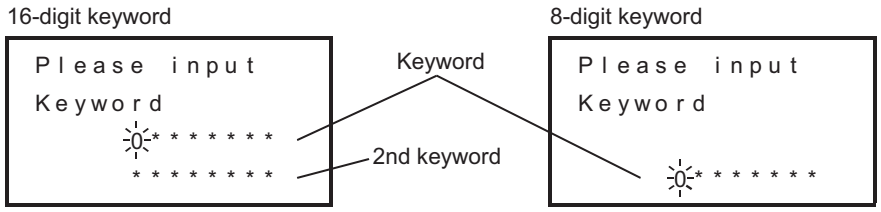

2) Use the [+] / [-] buttons to specify the first digit of the keyword, then press [OK] to proceed to the next digit. To cancel the operation and return to the "menu screen", press [ESC].

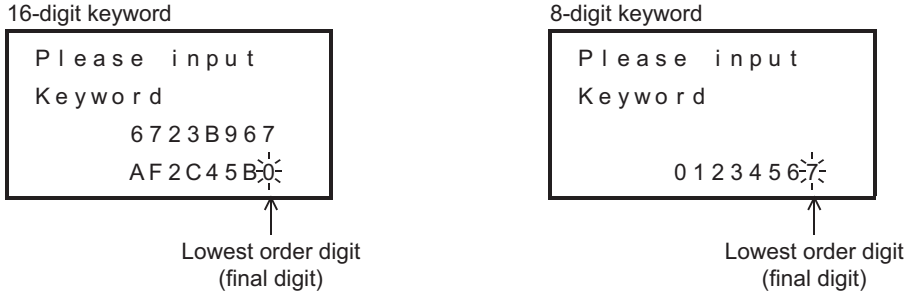

Button		Operation Description	
ESC		Cancels the operation and returns to the "menu screen" if pressed when the keyword's left-most digit (highest order digit) is blinking. Cancels the input and moves leftward to the next digit (higher order digit) if pressed when a digit other than the left-most digit is blinking.	
-		Reduces the value (F→E...2→1→0). Hold for 1 second or longer for high-speed reduction.	
+		Increases the value (0→1→2...E→F). Hold for 1 second or longer for high-speed increase.	
OK	Highest order digit to 2nd digit	Registers the specified value and moves to the next digit input position. If [OK] is pressed at the lowest order digit, and if the entered keyword is correct, the Keyword is canceled.	
	Lowest order digit (final digit)	Correct Keyword	An "All operation is possible" message appears, and the Keyword is canceled.
		Incorrect Keyword	A "Incorrect Keyword!" message appears.

3) If the [OK] button is pressed at the lowest order position, the entered Keyword is registered and the message shown to the right appears.
   If the "Incorrect Keyword" message appears, press [ESC] and return to step 1).

4) Press [OK] or [ESC] to return to the "menu screen".

If keyword is correct

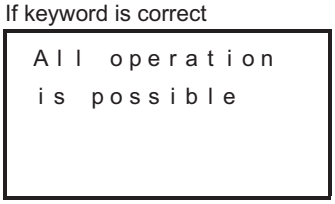

If keyword is incorrect

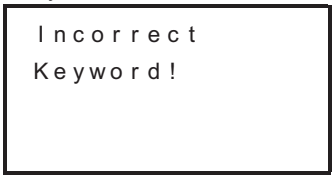

19.11.6 Enabling a keyword

1) At the menu screen, use the [+] / [-] buttons to move the cursor to the "keyword" item, then press [OK] to display the "enable keyword" screen.

2) Press the [OK] button to enable the keyword. Or, to retain the keyword's canceled status, press [ESC].

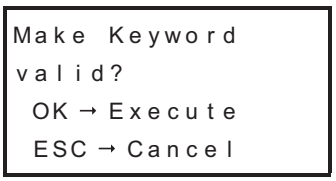

Button	Operation Description
ESC	Cancels the operation and returns to the "menu screen".
-	Disabled
+	Disabled
OK	Enables the Keyword and returns to the "menu screen".

19.12 Memory Cassette Transfers

Data transfers between the internal EEPROM memory and a connected memory cassette can be performed from the "Cassette" menu when the PLC is in a STOP state.
This menu is disabled, however, if a keyword is registered in the internal EEPROM. In this case, remove the memory cassette and use the programming tool to cancel the internal EEPROM's keyword.

Item	Operation Description
Cassette←PLC	Copies internal program memory (EEPROM) data to a connected memory cassette.
Cassette→PLC	Copies data from a connected memory cassette to the internal program memory (EEPROM).

Caution

When a memory cassette is connected with a display module, perform the data transfer procedure in the display module.
The memory cassette cannot be used for the data transfer procedure.

19.12.1 Transfer from internal EEPROM to memory cassette (Cassette <- PLC)

1) At the menu screen, use the [+] / [-] buttons to move the cursor to the "Cassette" item, then press [OK] to display the "memory cassette transfer screen".
To cancel the operation and return to the "top screen (time display)", press [ESC].

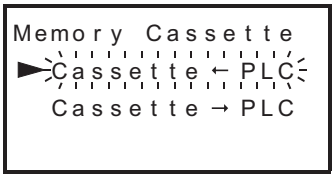

2) Use the [+] / [-] buttons to move the cursor to the "Cassette ← PLC" item, then press [OK] to display the screen shown to the right.
To cancel the operation and return to the "memory cassette transfer screen", press [ESC].



3) Press [OK] to begin the transfer.
Or, press [ESC] to cancel the operation.

Button	Operation Description
ESC	Cancels the operation and returns to the "memory cassette transfer screen".
-	Disabled
+	Disabled
OK	Executes the transfer.

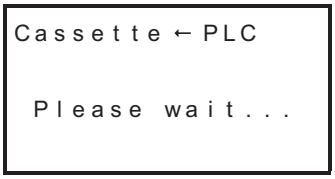

Caution

Do not turn the PLC power off or perform writing from the programming tool while a program is being transferred by a "memory cassette transfer" menu operation, as these actions could destroy the program, causing incorrect operation of the PLC.

4) Press [OK] or [ESC] to return to the "memory cassette transfer screen".

- Result and measures to take
  - The transfer is not executed if a "PLC is running" message appears.
    In this case, set the PLC to the STOP state, then perform step 3) described above.

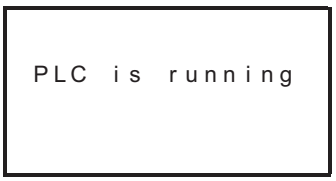

  - The transfer is not executed if a "Transfer failed" message appears.
    In this case, turn the power off, check the memory cassette connection, then attempt the operation again from the first step.

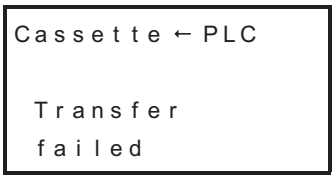

  - The transfer is not executed if a "Memory Cassette is write-protected" message displays.
    In this case, turn the power OFF, set the memory cassette PROTECT switch to OFF, then attempt the operation again from the first step.

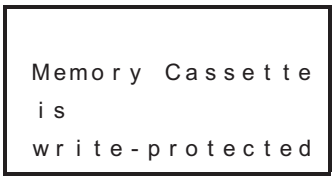

  - A "Transfer completed" message appears when the transfer is completed.
    When this message appears, press [OK] or [ESC] to display the "Cassette screen".

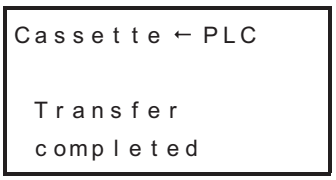

5) Press [ESC] to display the "menu screen".

19.12.2 Transfer from memory cassette to internal EEPROM (Cassette -> PLC)

1) At the menu screen, use the [+] / [-] buttons to move the cursor to the "Cassette" item, then press [OK] to display the "memory cassette transfer screen".
   To cancel the operation and return to the "top screen (time display)", press [ESC].

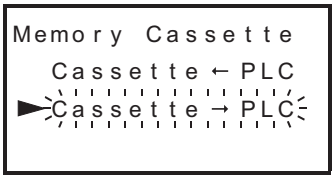

2) Use the [+] / [-] buttons to move the cursor to the "Cassette → PLC" item, then press [OK] to display the screen shown to the right.
   To cancel the operation and return to the "memory cassette transfer screen", press [ESC].



3) Press [OK] to begin the transfer.
   Or, press [ESC] to cancel the operation.

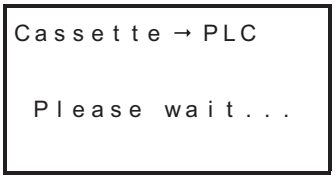

Button	Operation Description
ESC	Cancels the operation and returns to the "memory cassette transfer screen".
-	Disabled
+	Disabled
OK	Executes the transfer.

Caution

Do not turn the PLC power off or perform writing from the programming tool while a program is being transferred by a "memory cassette transfer" menu operation, doing so may destroy the program and disorder the PLC.

4) Press [OK] or [ESC] to return to the "memory cassette transfer screen".

- Result and measures to take
  - The transfer is not executed if a "PLC is running" message appears.
    In this case, set the PLC to the STOP state, then perform the step 3) operation described above.

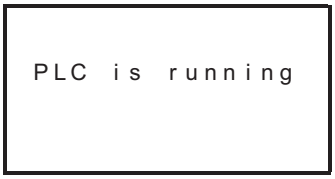

  - The transfer is not executed if a "Transfer failed" message appears.
    In this case, turn the power off, check the memory cassette connection, then attempt the operation again from the first step.

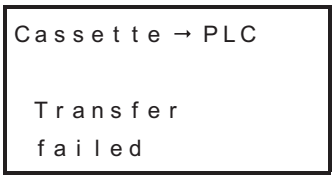

  - A "Transfer completed" message appears when the transfer is completed.
    When this message appears, press [OK] or [ESC] to display the "memory cassette transfer screen".



5) Press [ESC] to display the "menu screen".

19.13 System Information (Restrictions From PLC)

Some of the display module functions require system information settings in order to enable program control of these functions. Functions which require the use of system information are listed below.

- Specified device monitor function
  → **Refer to Section 19.14 for details.**
- Screen saver function
  → **Refer to Section 19.15 for details.**
- Display screen protect function
  → **Refer to Section 19.16 for details.**
- Operation button ON/OFF information
  → **Refer to Section 19.17 for details.**
- Monitor/test function
  - For hexadecimal display of current value:
    → **Refer to Section 19.18 for the setting procedure.**

19.13.1 System information list

Special data register D8300 and D8301 devices with first numbers specified are assigned as system information devices (data register, auxiliary relay). The data register (excluding special data register) should be specified at the system information's "system signal 1", and the auxiliary relay (excluding special auxiliary relay) should be specified at the system information's "system signal 2". Both D8300 and D8301 have default settings of "-1". When D8300 is "-1" the screen saver function becomes effective after 10 minutes.
→ **Refer to Section 19.14 to Section 19.18 for explanations of each system signal.**

1. System signal 1

Special data register	System Information	Description		Reference
D8300 = K□□ Occupies 5 points	D□□	Device type to be displayed	For specified device monitor function	Section 19.14
	D□□+1	Device No. to be displayed		
	D□□+2	Screen saver setting time (Forced display)		Section 19.15
	D□□+3	Device for display screen protect function		Section 19.16
	D□□+4	Not used		-

2. System signal 2

Special data register	System Information	Description		Reference
D8301 = K△△ Occupies 15 points	M△△	Request Edit of displayed device data		Section 19.14
	M△△+1	Edition completion response		Section 19.14
	M△△+2	Screen saver function invalid		Section 19.15
	M△△+3	Not used		-
	M△△+4	Operation button ON/OFF information	[ESC] button ON/OFF	Section 19.17
	M△△+5		[-] button ON/OFF	
	M△△+6		[+] button ON/OFF	
	M△△+7		[OK] button ON/OFF	
	M△△+8	Device for specifying the "Monitor/Test" menu's current value and setting the value display format (hexadecimal or decimal).		Section 19.18
	M△△+9	Specified device monitor display status		Section 19.14
	M△△+10 to 14	Not used		-

19.13.2 System information setting program example

The following is a program example in which the system information has been assigned to D50 to D54 and M50 to M64.

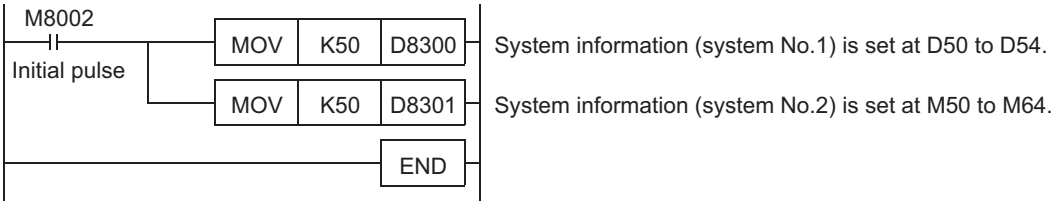

19.14 Specified Device Monitor Function

The specified device monitor function can change the top screen to the monitor/test screen for a device specified by the user.

For the specified device monitor function, specify the device type to be displayed in "D□□" of the system information (system signal 1), and specify the device number to be displayed in "D□□+1" of the system information (system signal 1).

It is necessary to turn ON M△△ to enable the test operation on the specified device monitor screen.

19.14.1 System information - specified device monitor function

1. System signal 1

System Information	Description
D□□	Device type to be displayed
D□□+1	Device No. to be displayed*1

*1. Maximum or minimum value of the corresponding device if the device number is set outside the allowable range

The table below shows the device type to be displayed in accordance with the numeric value written in D□□.

If any numeric value outside the range from 1 to 10 is written in D□□, the specified device monitor function is disabled.

Value stored in D□□	Device type
1	Input(X)
2	Output(X)
3	Auxiliary relay(M)
4	State(S)
5	Timer(T)
6	Counter(C)
7	Data register(D)
8	Data register(DD)
9	Extended register(R)
10	Extended register(DR)
others	Not used

2. System signal 2

System Information	Description
M△△	Request Edit of displayed device data ON : Enables the test function. OFF : Disables the test function (and enables only monitoring).
M△△+1	Edition completion response*1
M△△+4	"ESC" key status
M△△+5	"-" key status
M△△+6	"+" key status
M△△+7	"OK" key status
M△△+9	Specified device monitor display status ON : The specified device monitor screen is displayed. OFF : Any screen other than the specified device monitor screen is displayed.

*1. Turns ON after completion of a test operation for a specified device monitor (or when the OK or ESC key operated).
To turn OFF, the request edit of a specified device monitor is turned off or it is turned off in the user's program.

19.14.2 Differences between specified device monitor screen and monitor/test screen

The figure below shows differences between the specified device monitor screen and the monitor/test screen.
→ **Refer to Subsection 19.14.5 for a display example of the specified device monitor screen.**
→ **Refer to Subsection 19.6.3 for a display example of the monitor/test screen.**

-Specified Device Monitor Screen

When D1000 is specified

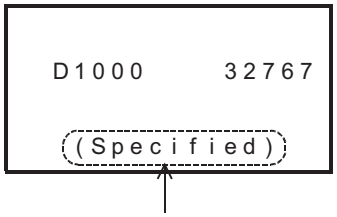

In the case of a specified device monitor screen "specified" is displayed.

-Monitor/Test Screen

When D1000 is monitored

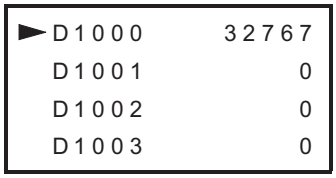

19.14.3 Program example1 (when monitoring/testing a timer)

In this program example, the device type to be displayed on the specified device monitor screen is set to "timer (T)". Sets the device No. to "T10".
For testing the timer T10, turn ON M0 to enable the test operation.
In this program example, system information is assigned from D50 to D54 and from M50 to M64.

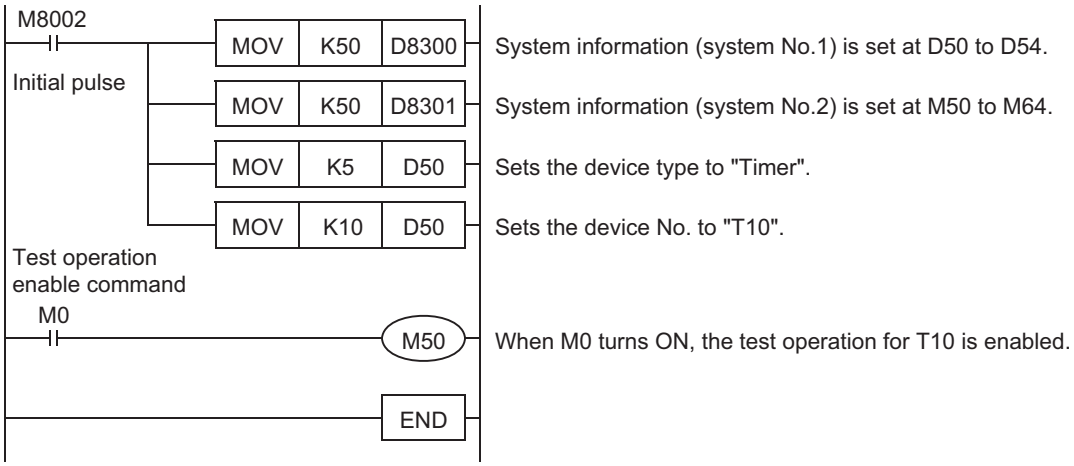

19.14.4 Program example2 (when monitoring consecutive timers using operation keys)

In this program example, the device type to be displayed on the specified device monitor screen is set to "timer (T)". The operation keys [+] and [-] in the display module are available to scroll device numbers T0 to T10 during monitoring.
In this program example, system information is assigned from D50 to D54 and from M50 to M64.

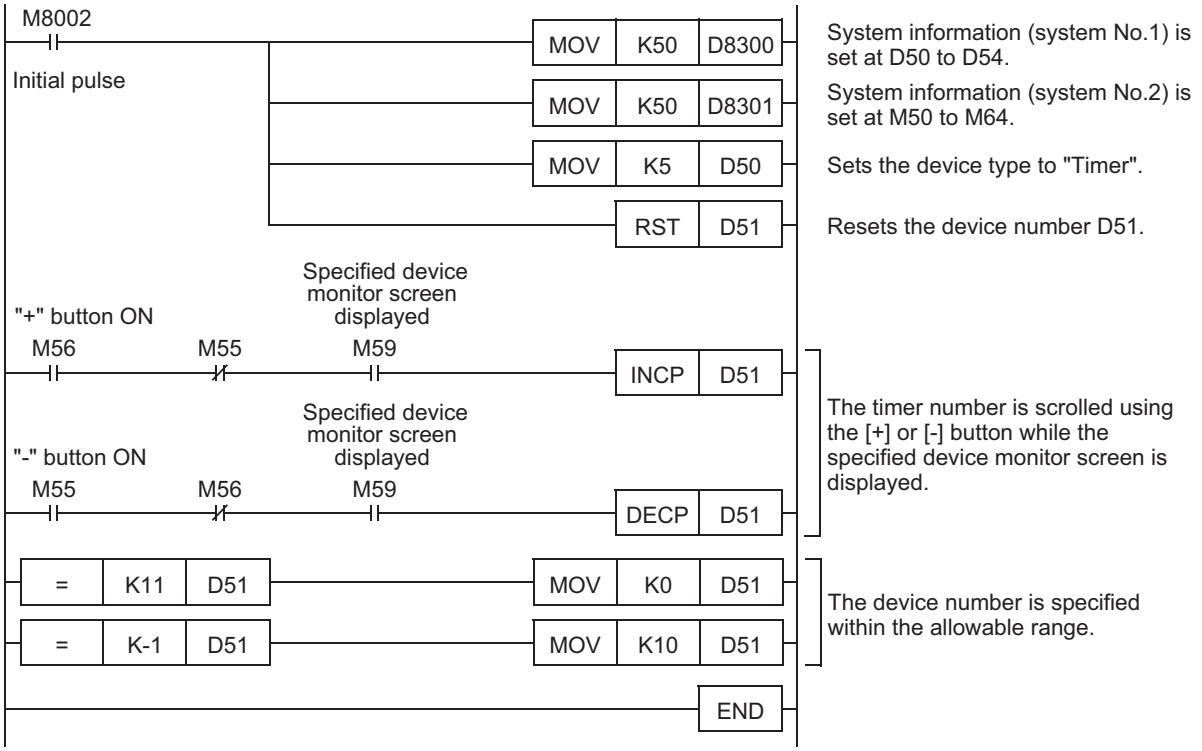

19.14.5 Program example3 (when monitoring non-consecutive timers using operation keys)

In this program example, the device type to be displayed on the specified device monitor screen is set to "timer (T)". The operation keys [+] and [-] in the display module are available to scroll device numbers T1, T5, T10 and T20 during monitoring.
In this program example, system information is assigned from D50 to D54 and from M50 to M64.

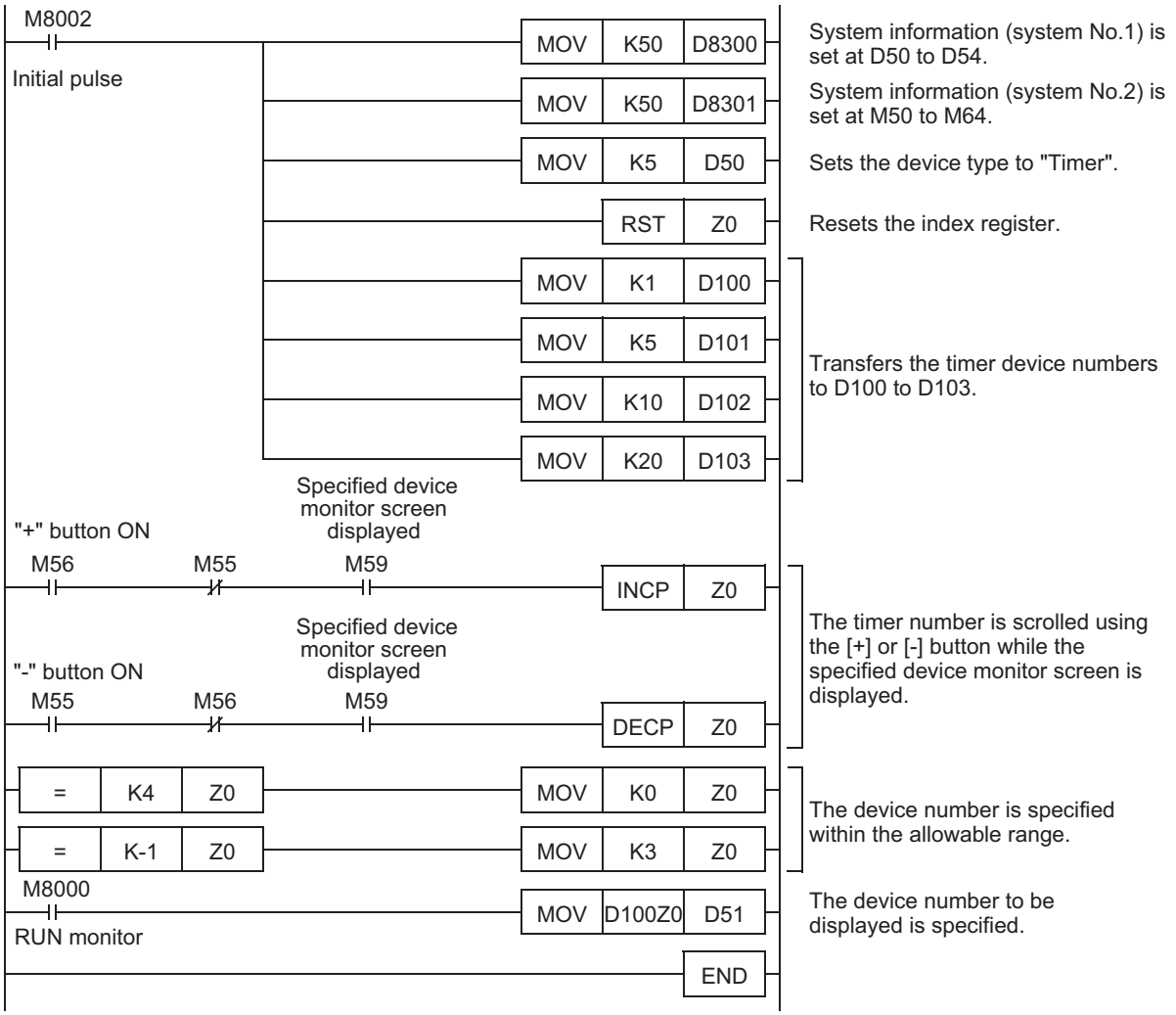

19.14.6 Monitor operation on specified device monitor screen

The monitor operation on the specified device monitor screen is common for all devices.
It is not possible to monitor extension file registers (ER and DER), file registers (D) and index registers (V and Z).

→ Refer to Subsection 19.14.5 for a display example of the specified device monitor screen.
→ Refer to Section 19.18 for the procedure used to display the timer, counter, and data register current values as hexadecimal values.

1) Press the [ESC] button to return to the menu screen.

```
D1000     32767

(Specified)
```

Selected Device Type	Button	Operation Description
All devices except	ESC	Returns to the "menu screen".
	-	Disabled
	+	Disabled
	OK	Disabled

19.14.7 Specified device monitor screen for monitoring

→ Refer to Section 19.18 for the procedure used to display the current values as hexadecimal values.

1. Data register [D (16-bit)] / extended register [R (16-bit)]

```
D1000     32767

(Specified)
```

2. Data register [DD (32-bit)] / extended register [DR (32-bit)]

File register (D):
The file register (D) current value cannot be directly monitored at the display module.

```
D1001,1000
          32767

(Specified)
```

3. Timer [T]

```
T  0  TS  R
  TN           0
  TV        1000
  (Specified)
```

4. Counter [C]

C0 to C199

```
C  0  CS  R
  CN           0
  CV        1000
  (Specified)
```

C200 to C255

```
C200  CS  R  U
  CN           0
  CV        1000
  (Specified)
```

5. Input [X] / Output [Y] / Auxiliary Relay [M] / State [S]

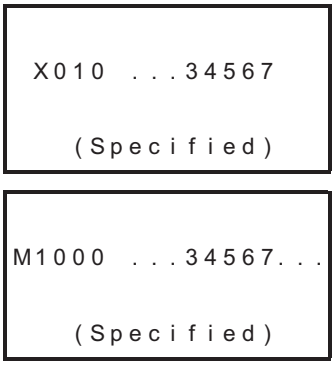

19.14.8 Test operation on specified device monitor screen

To perform the test operation on the specified device monitor screen, it is necessary to turn ON M△△ in the system information (system signal 2).
The device test operation is same as the operation in the monitor/test mode.

→ **Refer to Subsection 19.6.1 for the operation method.**

19.15 Screen saver function

The screen saver function displays the dedicated screen to prevent burning of the screen when a key operation is not given for the specified time in the display module.

For the screen saver function, set the screen saver setting time in "D□□+2" of the system information (system signal 1). The screen saver function is set as 10 minutes as an initial value in D8300, when "-1" or D□□+2 is "0".

19.15.1 System information - Screen saver function

1. System signal 10

System Information	Description
D□□+2	Screen saver setting time (in units of min) -1 or less : Forced screen saver function (to always display the dedicated screen) 0 : 10 minutes (initial value) 1 to 240 : Can be set in units of minute within this range 241 or more : 240 minutes

2. System signal 2

System Information	Description
M△ △+2	Screen saver function invalid

19.15.2 Screen saver display

When a key operation is not given within the specified screen saver setting time, the dedicated screen shown below appears and scrolls from the right to the left and from the top to the bottom.
When a key operation is given while the dedicated screen is displayed, the former screen appears.
The key operation given for the first time after the dedicated screen appeared resets the screen saver function, and is invalid as a key operation.

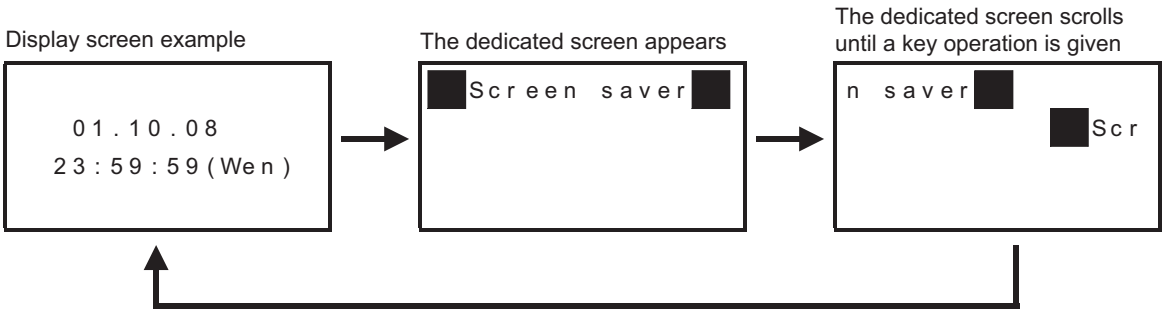

19.15.3 Program example (screen saver time setting)

In this program example, the screen saver time is set to "5 minutes". Use this program as a reference when other time settings are specified.
In this program example, system information is assigned from D50 to D54 and from M50 to M64.

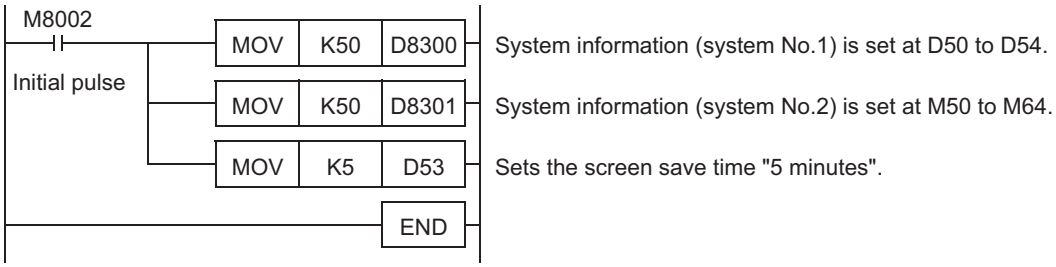

19.16 Display Screen Protect Function

The display screen protect function prevents accidental operation by restricting the display module functions.
The display screen protect function is enabled when no keyword is registered.
The display screen protect function's protection level is specified in the system information (system signal 1) "D□□+3".

→ **Refer to Section 19.3 for display module function.**
→ **Refer to Subsection 19.11.5 for the "keyword cancel" procedure.**
→ **Refer to Section 19.13 for system information setting.**

19.16.1 System information - display screen protect function

1. System signal 1

System Information	Setting Content (Level)	Function Restriction Summary
D□□+3	1	All functions except the "top screen (time display)" and "top screen (specified device monitor)" functions are disabled.
	2	The following functions are disabled: "monitor/test's 'test' function", "contrast setting", "time change", "menu display language setting",and "memory cassette transfer".
	Other values	All functions are enabled.

2. System signal 2

System signal 2 is unrelated to this function.

19.16.2 Program example (screen protect function setting)

In this program example, the display screen protect function is set to "level 2". Use this program as a reference when other level settings are specified.
In this program example, system information is assigned from D50 to D54 and from M50 to M64.

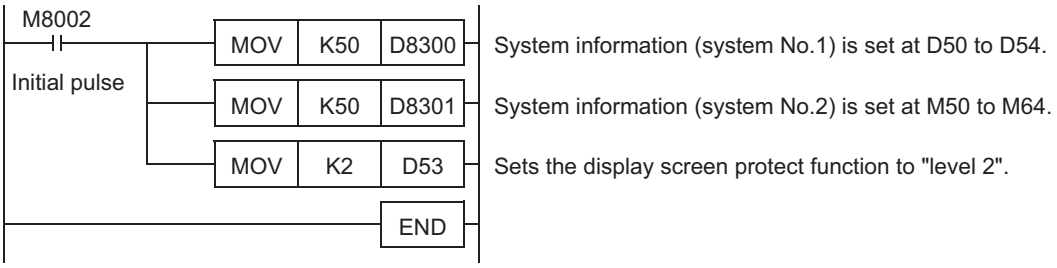

19.16.3 Keyword and display screen protect function levels and corresponding restrictions

If a keyword has been registered, that keyword related restriction takes priority over the "display screen protect function"

✓ : Usable

△ : Timer and counter settings cannot be changed

▲ : Only monitor function is usable (test function is not available)

☐ : Unusable

Function Name		Keyword				Display Screen Protect		
16-digit keyword*1 setting-->		None	All online operations prohibited	Writing prohibited	Reading/writing prohibited	None	1	2
8-digit keyword setting (level) -->			A (All operations prohibited)	B (Read/ Incorrect write protection)	C (Erroneous write prohibited)			
Top screen (time display)		✓	✓	✓	✓	✓	✓	✓
Top screen(specified device monitor)		✓	▲	△	△	✓	*2	▲
Monitor/Test		✓	☐	△	△	✓	☐	▲
ErrorCheck		✓	☐	✓	✓	✓	☐	✓
Display screen protect function		✓	☐	☐	☐	✓	✓	✓
Menu display language setting		✓	☐	✓	✓	✓	☐	☐
Contrast adjustment		✓	☐	✓	✓	✓	☐	☐
Time	Display	✓	✓	✓	✓	✓	☐	✓
	Setting	✓	☐	✓	✓	✓	☐	☐
Keyword (cancel)		-	✓	✓	✓	✓	☐	☐
Memory cassette transfer		✓	☐	☐	☐	✓	☐	☐

*1. Customer keyword/Permanent PLC lock included

*2. The test function can be enabled or disabled by setting the specified device monitor.

19.16.4 Relationship between keyword and display screen protect function

If the PLC's keyword registration function is used, that keyword related restriction takes priority over the display module's "display screen protect function". The relationship between keywords and the display screen protect function is shown below.

Keyword registration	Keyword Status	Display Screen Protect Status	Function Restrictions
Keyword is registered	Keyword is not canceled	Keyworde is being used	Restriction of functions is according to the keyword level.
		Keyword is not being used	
	Keyworde is canceled	Keyword is being used	All functions are enabled (no restrictions).
		Keyworde is not being used	
Keyword is not registered		Keyword is being used	Restriction of functions is according to the display screen protect function.
		Keyword is not being used	All functions are enabled (no restrictions).

19.16.5 Keyword levels

1. For 8-Digit Keyword

8-Digit Keyword Level	Keyword Content	Keyword Input Example
A (All operations prohibited)	8-digit hexadecimal value beginning with "A" or "0 to 9" numeral.	0ABCDEF2 AABCD345
B (Read/Incorrect write protection)	8-digit hexadecimal value beginning with "B".	B1234567 BABCDEF7
C (Erroneous write prohibited)	8-digit hexadecimal value beginning with "C".	C8904567 CDEF567F

2. For 16-Digit Keyword (Customer keyword/Permanent PLC lock included)

16-Digit Keyworde Level	Keyword Content	Keyword Input Example
All online operations prohibited	"A to F", "0 to 9" 16-digit value.	0ABCDEF262297529 AABCDEBF34523724
Writing prohibited	"A to F", "0 to 9" 16-digit value.	B123456789012345 7ABCDEF73DAEB93A
Reading/writing prohibited	"A to F", "0 to 9" 16-digit value.	2890445234817567 CDEF567FABDFEA46

19.16.6 Relationship between specified device monitor function and display screen protect function

When the display screen protect function is used, the generated function restriction has higher priority than the specified device monitor function.
The table below shows the relationship between the specified device monitor function and the display screen protect function.

Specified device monitor function	Display screen protect function status		
	None	1 (Initial screen fixing function)	2 (Test function prohibition setting)
Invalid	• Initial screen: Clock display • Transition to another screen: Enabled	• Initial screen: Fixed to clock display • Transition to another screen: Disabled	• Initial screen: Clock display • Transition to another screen: Enabled • Only monitoring of specified device is enabled.
Valid Only monitoring is enabled. (M △ △ = OFF)	• Initial screen: Specified device monitor • Transition to another screen: Enabled • Testing of specified device is disabled.	• Initial screen: Specified device monitor • Transition to another screen: Disabled	• Initial screen: Specified device monitor • Transition to another screen: Enabled • Only monitoring of specified device is enabled.
Valid Both monitoring and testing are enabled. (M △ △ = ON)	• Initial screen: Specified device monitor • Transition to another screen: Enabled • Both monitoring and testing of specified device are enabled.	• Initial screen: Specified device monitor • Transition to another screen: Disabled • Both monitoring and testing of specified device are enabled.	• Initial screen: Specified device monitor • Transition to another screen: Enabled • Only monitoring of specified device is enabled.

19.16.7 Pointers for using the display screen protect function

The display screen protect function settings should be specified in a sequence program.

- The protect function is enabled by using the display module's "monitor/test function" to change the system information's (system signal 1) "D□□+3" current value to "1" or "2".
- Once the setting is made, it cannot be canceled from the display module.
- To cancel the setting, use the programming tool to change the system information's (system signal 1) "D□□+3" current value to a value other than "1" and "2".
  If the system information's (system signal 1) "D□□+3" is set in a general purpose data register, however, the display screen protect function can be canceled by turning the power off, then on again.

19.17 Operation Button ON/OFF Information

Operation button ON/OFF information can be monitored at the system information (system signal 2) "M△△+4 to M△△+7" while the PLC is running. Various applications of this function are described below.

→ **Refer to Section 19.13 for system information setting.**

19.17.1 Various applications

1. **Operation button function checks**
   The programming tool can be used to monitor the system information's (system signal 2) "operation button ON/OFF information", to verify that operation buttons are functioning properly.

2. **Specified device monitor function device changes**
   Devices handled in the specified device monitor function can be changed over by using both the "specified device monitor display status" and "operation button ON/OFF information" in the system information (system signal 2).

→ **Refer to Section 19.14 for the specified device monitor function setting procedure.**

19.17.2 System information - operation button ON/OFF information

1. **System signal 1**
   System signal 1 has no system information related to this function.

2. **System signal 2**

System Information	Status	Description
M△△+4	ON	[ESC] button is pressed.
	OFF	[ESC] button is not pressed.
M△△+5	ON	[-] button is pressed.
	OFF	[-] button is not pressed.
M△△+6	ON	[+] button is pressed.
	OFF	[+] button is not pressed.
M△△+7	ON	[OK] button is pressed.
	OFF	[OK] button is not pressed.

19.18 Specifying a Hexadecimal Current Value Display Format

The procedure for specifying a hexadecimal display format for current values which display at the "Monitor/Test" menu explained below. The display format is specified by the system information's (system signal 2) "M□□+8" ON/OFF status.
The display formats which correspond to the ON and OFF statuses are shown in Section 19.13 below. The display format should either be fixed as decimal or hexadecimal. Switching between the two should be possible by an external operation.

→ **Refer to Section 19.13 for system information setting.**

19.18.1 System information - specifying a hexadecimal current value display format

1. System signal 1

System signal 1 is unrelated to this function.

2. System signal 2

System Information	Setting Content	Display Format	Display Subjects
M△△+8	ON	Hexadecimal	Timer (T) [current value/setting value], counter (C) [current value/setting value], data register (D) [16-bit/32-bit], extended register (R) [16-bit/32-bit], and extended file register (ER) [16-bit/32-bit]
	OFF	Decimal	

19.18.2 Program example 1 (specifying a hexadecimal data display format)

The following program example specifies a hexadecimal display format for current values and setting values which display at the "Monitor/Test" screen. In this program example, system information is assigned from D50 to D54 and from M50 to M64.

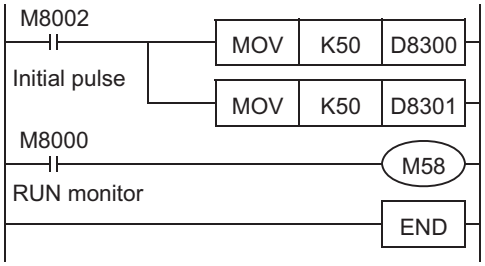

System information (system No.1) is set at D50 to D54.

System information (system No.2) is set at M50 to M64.

Specifies a hexadecimal display format for current values which appear at the Monitor/Test screen.

19.18.3 Program example 2 (specifying a decadal data display format)

The following program example specifies a decimal display format for current values and setting values which appear at the "Monitor/Test" screen. In this program example, system information is assigned from D50 to D54 and from M50 to M64.

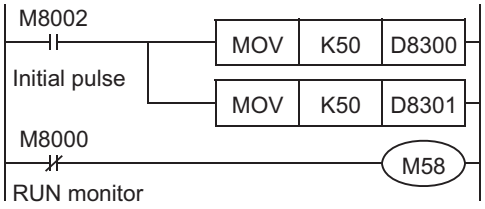

System information (system No.1) is set at D50 to D54.

System information (system No.2) is set at M50 to M64.

Specifies a decimal display format for current values which appear at the Monitor/Test screen.

19.19 Operation Error Messages and Corrective Actions

The following is a list of error messages which the system displays after an operation is performed.

Relevant Menu Screen	English	Japanese	Corrective Action
• All menus	This operation is protected by the keyword	ｿｳｻﾃﾞ ｷﾏｾﾝ ｷｰﾜｰﾄﾞ ﾆﾖｯﾃ ﾎｺﾞ ｻﾚﾃｲﾏｽ	Cancel the keyword, then attempt the operation again.
• Keyword	The keyword is not set	ｷｰﾜｰﾄﾞ ﾊｾｯﾃｲ ｻﾚﾃｲﾏｾﾝ	No keyword has been registered. Keyword cannot be registered from the display module. A programming tool such as GX Developer, etc., is required to register keyword.
	Incorrect Keyword!	ｷｰﾜｰﾄﾞ ﾌｲｯﾁ	The entered keyword does not match the registered keyword. Verify the registered keyword, then enter the correct keyword.
• Monitor/test (setting change[*1]) • Memory cassette transfer	PLC is running	RUNﾁｭｳﾃﾞｽ	Stop the PLC, then attempt the operation again.
	Memory Cassette is write-protected	ﾒﾓﾘｶｾｯﾄｶﾞ ｶｷｺﾐｷﾝｼﾃﾞｽ	Turn the memory cassette's write-protected status to OFF, then attempt the operation again.
• Keyword (setting change) • Memory cassette transfer	Fatal error occurred	ﾌｪｰﾀﾙｴﾗｰ ﾊｯｾｲﾁｭｳ	For details, refer to Subsection 19.19.1.
• Memory cassette transfer	Memory Cassette is not connected	ﾒﾓﾘｶｾｯﾄｶﾞ ｿｳﾃｬｸｻﾚﾃｲﾏｾﾝ	Turn the PLC power OFF, install the memory cassette, then attempt the operation again.
	The Keyword is set in the Internal Memory	ﾅｲｿﾞｳEEPROMﾆ ｷｰﾜｰﾄﾞ ｶﾞ ｾｯﾃｲｻﾚﾃｲﾏｽ	Remove the memory cassette, restart the unit (power OFF→ON), then use the programming tool to cancel the keyword in the internal EEPROM.
• Memory cassette transfer (reading/writing)	Transfer completed	ﾃﾝｿｳｾｲｺｳｼﾏｼﾀ	Transfer successful.
	Transfer failed	ﾃﾝｿｳｼｯﾊﾟｲｼﾏｼﾀ	Check if the memory cassette is properly installed.

*1. The setting value can also be changed when the PLC is in RUN mode.

19.19.1 When a "Fatal error occurred" message appears

Operation is possible with the "Level C" or "Level B" keyword function restrictions.
However, the system is probably in one of the statuses described below. Check these statuses in the order shown below, and take the appropriate corrective action.

1. Perform an error check at the display module, and if an error is active, take the appropriate corrective action.

→ Refer to Section 19.7 for the error check procedure.

If a program error is active:
The fatal error was probably activated due to a program error.
Use the programming tool to correct the program.

→ Refer to Section 14.6 for error codes and corrective actions.
→ Refer to Subsection 14.5.3 for watchdog timer error corrective actions.

If no program error is active:
There may be a problem with the PLC's memory content. Perform the following procedure.

1) Use the programming tool to perform a program memory all-clear.
2) Rewrite the program.
3) Stop the PLC, turn the power ON, display the "Error Check" screen and check to refer to if the "Fatal error occurred" message appears.
   - If the "Fatal error occurred" message appears, perform the corrective action described at item "2" below.
   - If the "Fatal error occurred" message does not appear, set the PLC to a RUN state, then check again if the message appears.
     If the message appears, a watchdog timer error has probably occurred. In this case, the program should be re-examined.

→ Refer to Subsection 14.5.3 for watchdog timer error corrective actions.

2. If the "Fatal error occurred" message still appears after performing the corrective actions described in item 1 above, perform the following procedure to check for symptom changes.

Turn the power OFF and disconnect all extension devices.
(extension connectors, extension cables, and expansion board connectors)

Turn the power ON again at the main unit, display the "Error Check" screen again, and check if the "Fatal error occurred" message appears.

1) If the "Fatal error occurred" message appears:
   The main unit hardware may have failed. Contact your local Mitsubishi Electric distributor.
2) If the "Fatal error occurred" message does not appear:
   Turn the power OFF, connect the extension devices, then operate the system again to check for errors.
   If the problem persists, there may be main unit or extension device hardware failure. Contact your local Mitsubishi Electric distributor.

19.20 Menu Display Characters - Japanese and English Display Character Correspondence Table.

Menu Screen		Japanese	English
Menu		ﾓﾆﾀ/ﾃｽﾄ ｴﾗｰﾁｪｯｸ LANGUAGE ｺﾝﾄﾗｽﾄ ｼﾞｺｸｾｯﾃｲ ｷｰﾜｰﾄﾞ ﾒﾓﾘｶｾｯﾄ ﾃﾝｿｳ	Monitor/Test ErrorCheck LANGUAGE Contrast ClockMenu Keyword Cassette
ErrorCheck		ｴﾗｰﾁｪｯｸ ｴﾗｰﾅｼ	ErrorCheck No errors
		ｴﾗｰﾁｪｯｸ ｴﾗｰｺｰﾄﾞ	ErrorCheck Error code
LANGUAGE		LANGUAGE Japanese English	LANGUAGE Japanese English
Contrast		ｺﾝﾄﾗｽﾄ	Contrast
ClockMenu		ｹﾞﾝｻﾞｲｼﾞｺｸ ｼﾞｺｸﾍﾝｺｳ	Current time Clock setting
		ｼﾞｺｸﾍﾝｺｳ	Clock setting
		ｹﾞﾝｻﾞｲｼﾞｺｸﾜ ｾｯﾃｲｼﾏｼﾀ	Current time is set
Keyword		ｷｰﾜｰﾄﾞﾖ ﾆｭｳﾘｮｸｼﾃｸﾀﾞｻｲ ******** ********	Please input Keyword ******** ********
		ｷｰﾜｰﾄﾞﾖ ﾕｳｺｳﾆｼﾏｽｶ OK→ｼﾞｯｺｳ ESC→ｷｬﾝｾﾙ	Make Keyword valid? OK→Execute ESC→Cancel
		ｿｳｻｶﾞ ｶﾉｳﾆﾅﾘﾏｼﾀ	All operation is possible
		ｷｰﾜｰﾄﾞ ﾌｲｯﾁ	Incorrect Keyword!
Memory cassette transfer		ﾒﾓﾘｶｾｯﾄﾃﾝｿｳ ﾒﾓﾘｶｾｯﾄ←PC ﾒﾓﾘｶｾｯﾄ→PC	Memory Cassette Cassette←PC Cassette→PC
	Cassette←PC	ﾒﾓﾘｶｾｯﾄ←PC ｼﾞｯｺｳﾁｭｳ…	Cassette←PC Please wait...
	Cassette→PC	ﾒﾓﾘｶｾｯﾄ→PC ｼﾞｯｺｳﾁｭｳ…	Cassette→PC Please wait...
	Cassette←PC Cassette→PC	ﾃﾝｿｳｾｲｺｳｼﾏｼﾀ	Transfer completed
		ﾃﾝｿｳｼｯﾊﾟｲｼﾏｼﾀ	Transfer failed

20. Terminal Block

DESIGN PRECAUTIONS ⚠ DANGER

- Make sure to have the following safety circuits outside of the PLC to ensure safe system operation even during external power supply problems or PLC failure.
  Otherwise, malfunctions may cause serious accidents.
  1) Most importantly, have the following: an emergency stop circuit, a protection circuit, an interlock circuit for opposite movements (such as normal vs. reverse rotation), and an interlock circuit (to prevent damage to the equipment at the upper and lower positioning limits).
  2) Note that when the PLC CPU detects an error, such as a watchdog timer error, during self-diagnosis, all outputs are turned off. Also, when an error that cannot be detected by the PLC CPU occurs in an input/output control block, output control may be disabled.
     External circuits and mechanisms should be designed to ensure safe machinery operation in such a case.
  3) Note that when the PLC CPU detects an error, such as a watchdog timer error, during self-diagnosis, all outputs are turned off. Also, when an error that cannot be detected by the PLC CPU occurs in an input/output control block, output control may be disabled.
     External circuits and mechanisms should be designed to ensure safe machinery operation in such a case.
  4) Note that when an error occurs in a relay, triac or transistor output device, the output could be held either on or off.
     For output signals that may lead to serious accidents, external circuits and mechanisms should be designed to ensure safe machinery operation in such a case.

DESIGN PRECAUTIONS ⚠ CAUTION

- Do not bundle the control line together with or lay it close to the main circuit or power line. As a guideline, lay the control line at least 100mm (3.94") or more away from the main circuit or power line.
  Noise may cause malfunctions.
- Install module so that excessive force will not be applied to peripheral device connectors.
  Failure to do so may result in wire damage/breakage or PLC failure.

INSTALLATION PRECAUTIONS ⚠ DANGER

- Make sure to cut off all phases of the power supply externally before attempting installation or wiring work.
  Failure to do so may cause electric shock.

INSTALLATION PRECAUTIONS ⚠CAUTION

- Use the product within the generic environment specifications described in Section 4.1 of this manual.
  Never use the product in areas with excessive dust, oily smoke, conductive dusts, corrosive gas (salt air, Cl2, H2S, SO2 or NO2), flammable gas, vibration or impacts, or expose it to high temperature, condensation, or rain and wind.
- Do not touch the conductive parts of the product directly.
  Doing so may cause device failures or malfunctions.
- Install the product securely using a DIN rail or mounting screws.

Terminal block	DIN rail only
Main unit, FX2N Series I/O extension unit/block, and FX2N/FX3U Series special extension block/special adapter	DIN rail or direct mounting

- Install the product on a flat surface.
  If the mounting surface is rough, undue force will be applied to the PC board, thereby causing nonconformities.
- When drilling screw holes or wiring, make sure that cutting and wiring debris do not enter the ventilation slits.
  Failure to do so may cause fire, equipment failures or malfunctions.
- Be sure to remove the dust proof sheet from the PLC's ventilation port when installation work is completed.
  Failure to do so may cause fire, equipment failures or malfunctions.
- Connect the extension cables, peripheral device cables, input/output cables and battery connecting cable securely to their designated connectors.
  Loose connections may cause malfunctions.
- Turn off the power to the PLC before attaching or detaching the following devices.
  Failure to do so may cause device failures or malfunctions.
  - Peripheral devices, expansion boards, and special adapters
  - Extension units/blocks and the FX Series terminal block
  - Battery and memory cassette

WIRING PRECAUTIONS ⚠DANGER

- Connect the AC power supply to the dedicated terminals specified in this manual.
  If an AC power supply is connected to a DC input/output terminal or DC power supply terminal, the PLC will burn out.
- Make sure to cut off all phases of the power supply externally before attempting installation or wiring work.
  Failure to do so may cause electric shock or damage to the product.
- Make sure to attach the terminal cover, offered as an accessory, before turning on the power or initiating operation after installation or wiring work.
  Failure to do so may cause electric shock.

WIRING PRECAUTIONS ⚠CAUTION

- Connect the DC power supply to the dedicated terminals specified in this manual.
  If an AC power supply is connected to a DC input/output terminal or DC power supply terminal, the PLC will burn out.
- Do not wire vacant terminals externally.
  Doing so may damage the product.
- When drilling screw holes or wiring, make sure cutting or wire debris does not enter the ventilation slits.
  Failure to do so may cause fire, equipment failures or malfunctions.
- Make sure to properly wire to the FX Series terminal blocks in accordance with the following precautions.
  Failure to do so may cause electric shock, a short-circuit, wire breakage, or damage to the product.
  - The disposal size of the cable end should follow the dimensions described in this manual.
  - Tightening torque should be between 0.5 and 0.8 N•m.

20.1 Outline

A terminal block is used to convert connector type input/output terminals into a terminal block.
Moreover, dedicated input and output terminal blocks (built-in element types) can be used to receive AC input signals for conversion to relay / transistor / triac output types.

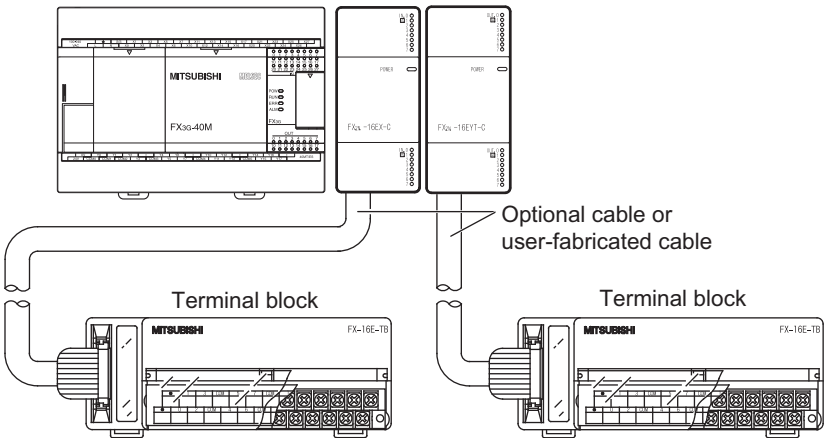

20.1.1 Product configuration

The connection destinations shown below are products which can be connected by "connector ⇔ connector" cables. An individual-wire type can also be used for wiring to the terminal blocks of PLC-side input/output products.

Model Name	Number of Input Points	Number of Output Points	Function	Connection Destination	Drive Power Supply
FX-16E-TB	16 input points or 16 output points		Connects directly to PLC input/output terminals.	FX2N-16EX-C (sink input) FX2N-16EYT-C (sink output)	*1
FX-32E-TB	32 input points, 32 output points, or 16 input & 16 output points				
FX-16EX-A1-TB*2	16	-	100V AC input type	FX2N-16EX-C (sink input)	*4
FX-16EYR-TB*3	-	16	Relay output type	FX2N-16EYT-C (sink output)	24V DC 80mA
FX-16EYS-TB*3	-	16	Triac output type	FX2N-16EYT-C (sink output)	24V DC 112mA
FX-16EYT-TB*3	-	16	Transistor output (sink) type	FX2N-16EYT-C (sink output)	24V DC 112mA
FX-16EYT-H-TB*3	-	16	Transistor output (sink) type	FX2N-16EYT-C (sink output)	24V DC 112mA

*1. A power supply for the input circuit is required when connected to the FX2N-16EX-C.
The current consumption is shown in the table below.

	Power Supply Voltage	Current Consumption
FX2N-16EX-C	24V DC	112mA

*2. The applications shown below are not supported.

	Unsupported Applications
High-speed processing	High-speed counter, input interruption, pulse catch, speed detection (SPD) instruction
Time division inputs	Input matrix (MTR) instruction, digital switch (DSW) instruction
Other	Absolute current value read (ABS) instruction

*3. The applications shown below are not supported.

	Unsupported Applications
Pulse outputs	Pulse Y output (PLSY) instruction, acceleration/deceleration setup (PLSR) instruction, pulse width modulation (PWM) instruction, DOG search zero return (DSZR) instruction, batch data positioning mode (TBL) instruction, absolute current value read (ABS) instruction, zero return (ZRN) instruction, variable speed pulse output (PLSV) instruction, drive to increment (DRVI) instruction, drive to absolute (DRVA) instruction
Time division inputs	Input matrix (MTR) instruction, digital switch (DSW) instruction
Time division output	Seven segment with latch (SEGL) instruction

*4. A power supply for the input circuit is required when connected to the FX2N-16EX-C.
The current consumption is shown in the table below.

	Power Supply Voltage	Current Consumption
FX2N-16EX-C	24V DC	160mA

20.2 External Dimensions and Component Names

FX-16E-TB

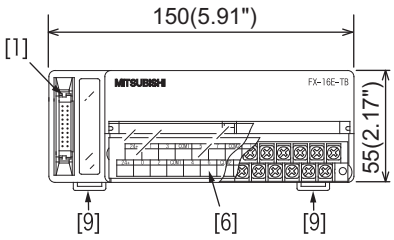

FX-32E-TB

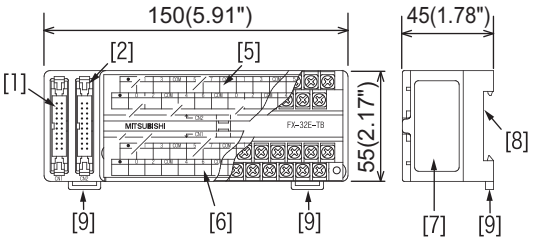

FX-16EX-A1-TB

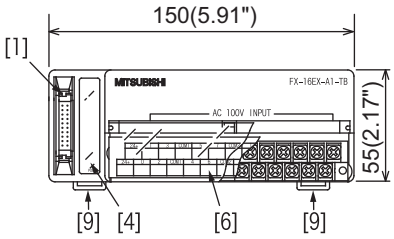

FX-16EYR-TB
FX-16EYS-TB
FX-16EYT-TB, FX-16EYT-H-TB

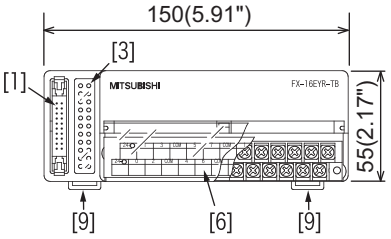

Units: mm (inches)
Accessories: Input/output No. labels, terminal block arrangement cards

No.	Name	Remarks
[1]	CN1 connector	-
[2]	CN2 connector	Present at FX-32E-TB.
[3]	Operation indicator LED	Present at FX-16EYR-TB, FX-16EYS-TB, FX-16EYT-TB, FX-16EYT-H-TB.
[4]	POWER LED	Present at FX-16EX-A1-TB.
[5]	CN2 terminal block (M3.5 screws)	Present at FX-32E-TB.
[6]	CN1 terminal block (M3.5 screws)	-
[7]	Nameplate	-
[8]	DIN rail mounting groove (DIN rail width: 35mm(1.38"))	-
[9]	DIN rail mounting hook	-

20.3 Terminal Layout

1. FX-16E-TB

When connected to the FX2N-16EYT-C

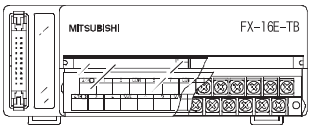

	Lower numbers							Higher numbers						
•	1	3	COM	5	7	COM	1	3	COM	5	7	COM
•	0	2	COM	4	6	COM	0	2	COM	4	6	COM

When connected to the FX2N-16EX-C

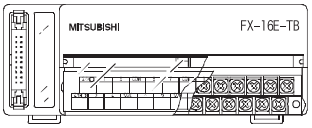

	Lower numbers							Higher numbers						
24+	1	3	•	5	7	•	1	3	•	5	7	•
24+	0	2	•	4	6	•	0	2	•	4	6	•

2. FX-32E-TB

When connected to the FX2N-16EYT-C

	Lower numbers							Higher numbers						
CN2 •	1	3	COM	5	7	COM	1	3	COM	5	7	COM
•	0	2	COM	4	6	COM	0	2	COM	4	6	COM

CN1 CN2

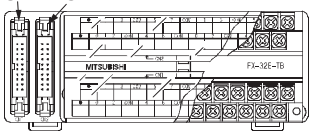

	Lower numbers							Higher numbers						
CN1 •	1	3	COM	5	7	COM	1	3	COM	5	7	COM
•	0	2	COM	4	6	COM	0	2	COM	4	6	COM

When connected to the FX2N-16EX-C

	Lower numbers							Higher numbers						
CN2 24+	1	3	•	5	7	•	1	3	•	5	7	•
24+	0	2	•	4	6	•	0	2	•	4	6	•

CN1 CN2

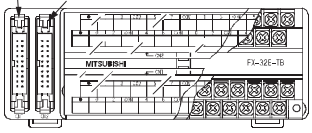

	Lower numbers							Higher numbers						
CN1 24+	1	3	•	5	7	•	1	3	•	5	7	•
24+	0	2	•	4	6	•	0	2	•	4	6	•

3. FX-16EX-A1-TB

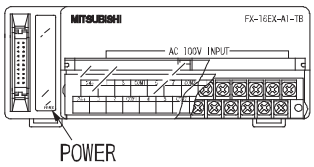

	Lower numbers								Higher numbers						
	24+	1	3	COM1	5	7	COM2	1	3	COM3	5	7	COM4		
24-	0	2	COM1	4	6	COM2	0	2	COM3	4	6	COM4			

4. FX-16EYR-TB, FX-16EYS-TB, FX-16EYT-TB, FX-16EYT-H-TB

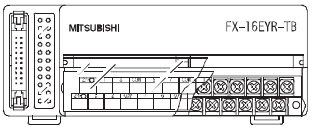

	Lower numbers								Higher numbers						
	24+	1	3	COM1	5	7	COM2	1	3	COM3	5	7	COM4		
24-	0	2	COM1	4	6	COM2	0	2	COM3	4	6	COM4			

20.4 Installation Work

→ **Refer to Section 8.1 for installation location.**

20.4.1 Installation

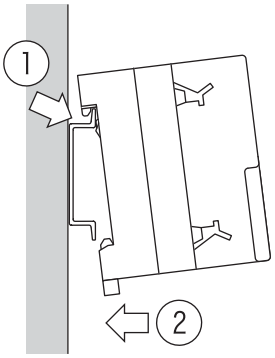

1. **Turn OFF all power supplies connected to the PLC, input/output devices, and terminal blocks.**
2. **Align the top side of the "DIN rail mounting groove" (refer to Fig.1 at right) with the DIN rail.**
3. **Press the product onto the DIN rail (refer to Fig.2 at right).**

20.4.2 Removal

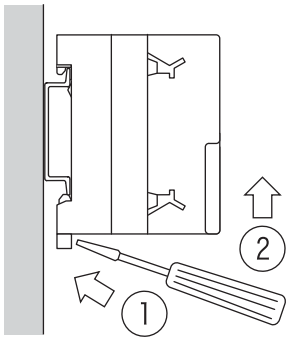

1. **Turn the power supply OFF.**
2. **Disconnect the wiring and input/output cables.**
3. **Place a flathead screwdriver against the DIN rail mounting hook in the posture shown (refer to Fig.1 at right)**
4. **Move the flathead screwdriver in direction shown at right (refer to Fig.2) to detach the DIN rail mounting hook from the DIN rail.**
5. **Remove the product from the DIN rail.**

20.4.3 Input/output cable connection

The terminal block's CN1 and CN2 connectors comply with the MIL-83503 standard.

→ **Refer to Subsection 9.2.2 for input/output cable information**

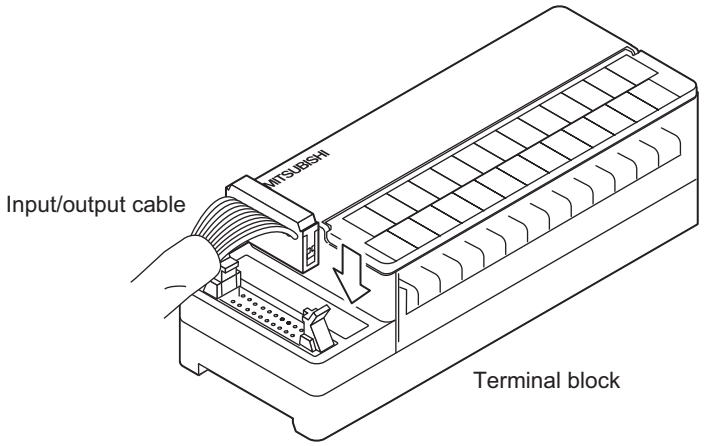

20.4.4 Connection to terminal block

1. Terminal Screw Size

The product terminal screws are as shown in the table below.

Model Name	Terminal Screw Size
FX-16E-TB, FX-32E-TB FX-16EX-A1-TB FX-16EYR-TB FX-16EYS-TB FX-16EYT-TB, FX-16EYT-H-TB	M3.5

2. Wire end treatment and tightening torque

Use solderless terminals of the following size.
Tighten the terminals to a torque of 0.5 N•m to 0.8 N•m.

- When 1 wire is connected to 1 terminal:
  Use a crimp terminal of the size shown below, and install it as shown in the lower right figure.

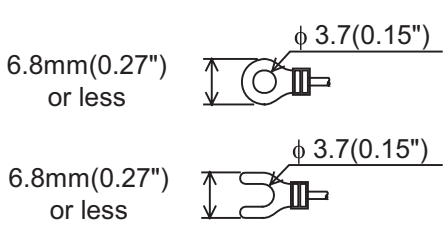

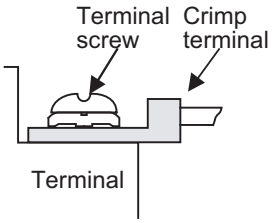

- When 2 wires are connected to 1 terminal:
  Use a crimp terminal of the size shown below, and install it as shown in the lower right figure.

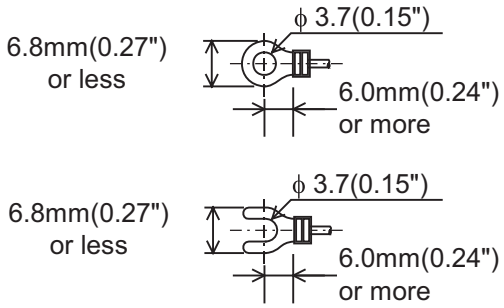

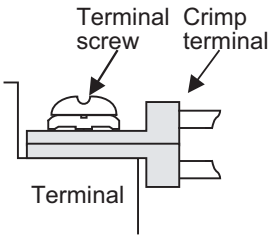

20.5 FX-16E-TB, FX-32E-TB

The FX-16E-TB and FX-32E-TB items must be connected using an FX2N series input/output connector type extension block.

	Input Connector	Output Connector
Connectable models	FX2N-16EX-C (sink input)	FX2N-16EYT-C (sink output)

20.5.1 Internal circuit

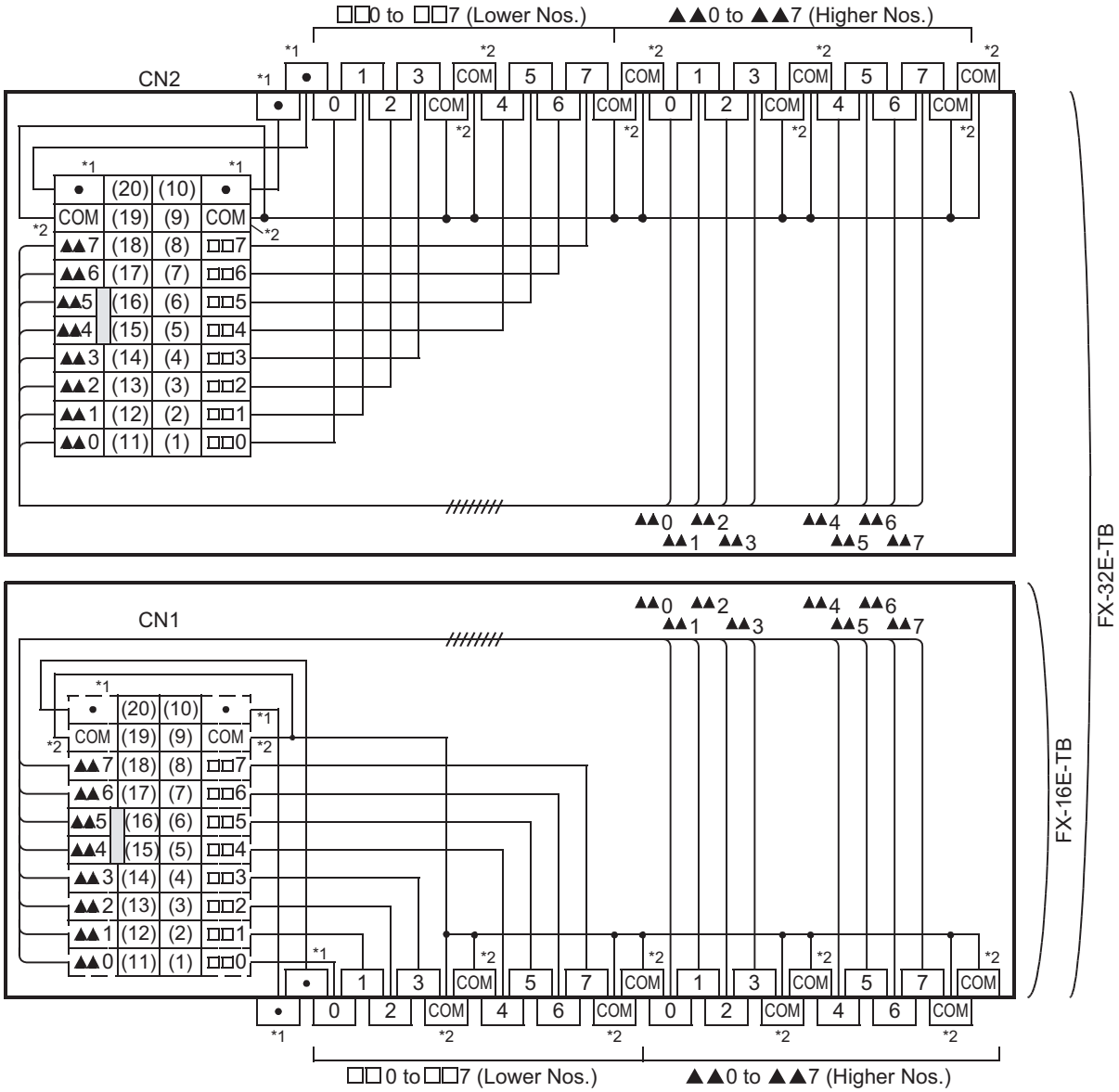

*1 "24+" when connected to FX2N-16EX-C.
*2 "•" when connected to FX2N-16EX-C.

20.5.2 Example of input external wiring

WIRING PRECAUTIONS **⚠CAUTION**

- Do not wire vacant terminals externally.
  Doing so may damage the product.

1. When connected to an FX2N-16EX-C (sink input) input extension block

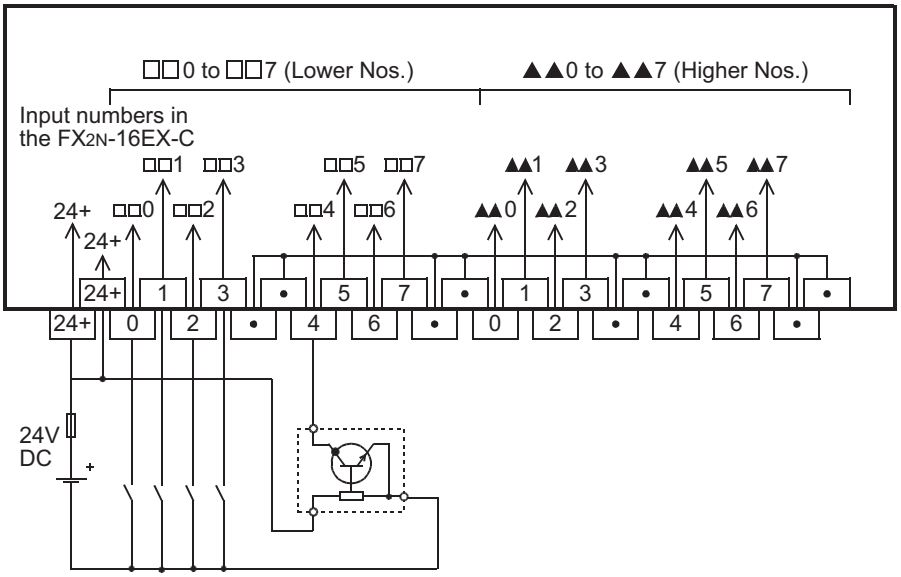

20.5.3 Output external wiring

WIRING PRECAUTIONS **⚠CAUTION**

- Do not wire vacant terminals externally.
  Doing so may damage the product.

1. When connected to an FX2N-16EYT-C (sink output) output extension block

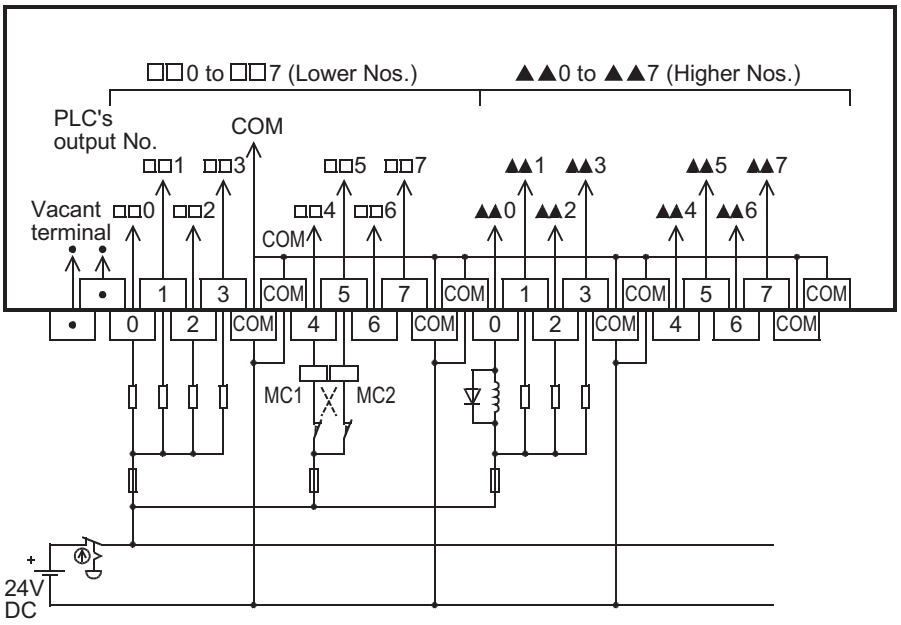

20.6 FX-16EX-A1-TB

The FX-16EX-A1-TB is used by connecting it to the FX2N series input extension block (24V DC).

	Input Connector
Connectable models	FX2N-16EX-C (sink input)

The applications shown below are not supported.

	Unsupported Applications
High-speed processing	High-speed counter, input interruption, pulse catch, speed detection (SPD) instruction
Time division inputs	Input matrix (MTR) instruction, digital switch (DSW) instruction
Other	Absolute current value read (ABS) instruction

20.6.1 Specifications

Item		AC Input Type
Input/output circuitry		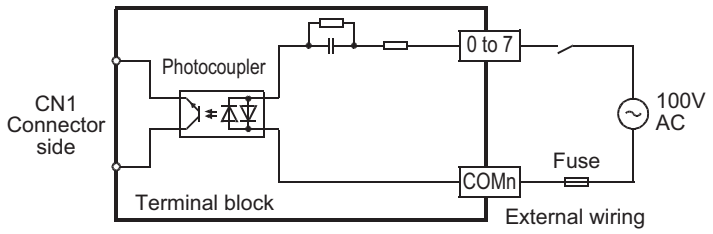
Input signal voltage		100 to 120V AC +10%, -15% 50/60Hz
Input signal current		4.7mA / 100V AC 50Hz 6.2mA / 110V AC 60Hz
Input impedance		Approx. 21kΩ / 50Hz Approx. 18kΩ / 60Hz
Input sensitivity	ON	3.8mA / 80V AC or more
	OFF	1.7mA / 30V AC or more
Response time*1		25 to 30ms
Input signal format		Voltage contact
Circuit isolation		Photocoupler isolation
Input operation display		No input LEDs (equipped with 24V power supply LED indicator)
Power consumption		1.2W (48mA 24V DC)*2

*1. This response time does not include the response delay at the PLC.

*2. 3.9W (160mA, 24V DC) is required when connected to the FX2N-16EX-C.

20.6.2 Internal circuit

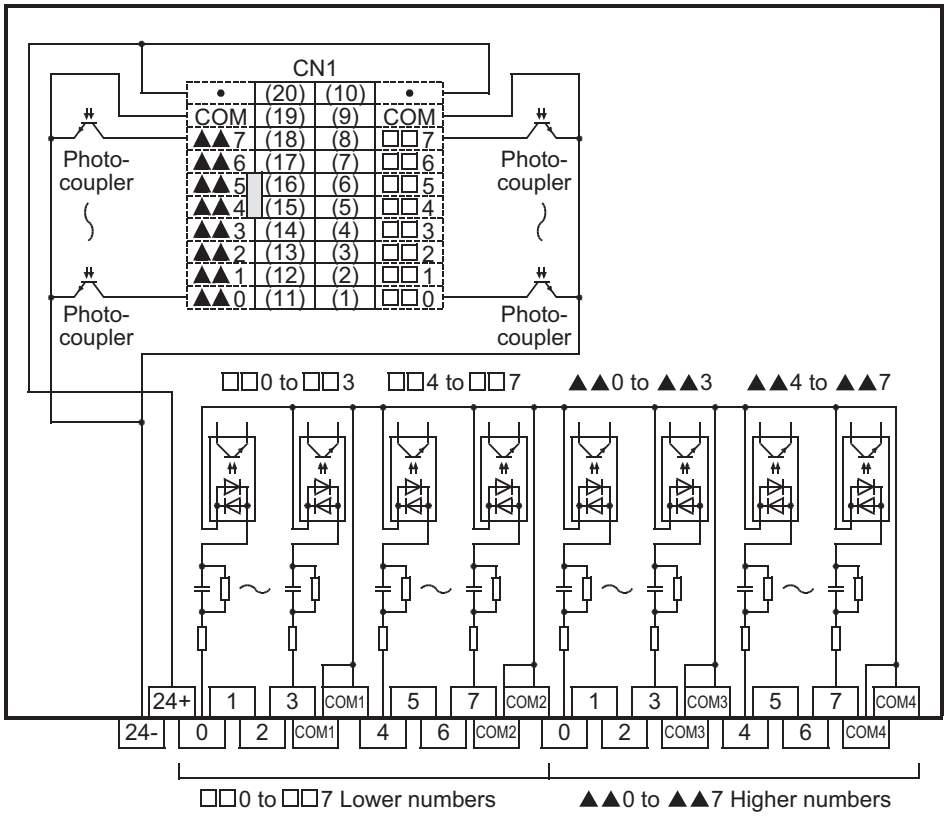

20.6.3 Example of input external wiring

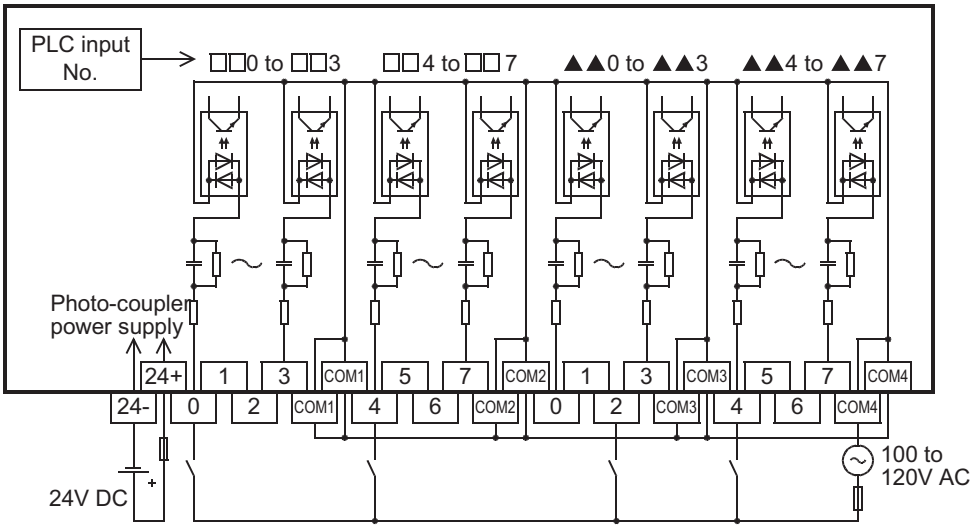

20.7 FX-16EYR-TB

The FX-16EYR-TB is used by connecting it to the FX2N series output extension block (transistor).

	Output Connector
Connectable models	FX2N-16EYT-C (sink output)

The applications shown below are not supported.

	Unsupported Applications
Pulse outputs	Pulse Y output (PLSY) instruction, acceleration/deceleration setup (PLSR) instruction, pulse width modulation (PWM) instruction, DOG search zero return (DSZR) instruction, batch data positioning mode (TBL) instruction, absolute current value read (ABS) instruction, zero return (ZRN) instruction, variable speed pulse output (PLSV) instruction, drive to increment (DRVI) instruction, drive to absolute (DRVA) instruction
Time division inputs	Input matrix (MTR) instruction, digital switch (DSW) instruction
Time division output	Seven segment with latch (SEGL) instruction

20.7.1 Specifications

Item		Relay output
Input/output circuitry		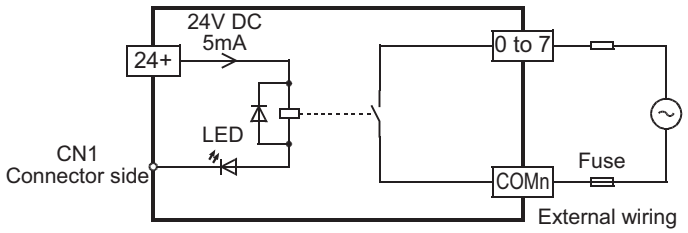
Load voltage		250V AC or less, 30V DC or less
Max. load	Resistance load	2A / point The total load current of resistance loads per common terminal should be the following value. • 4 output points/common terminal : 8A or less
	Inductive load	80 VA
Min. load		5V DC, 2mA Reference value
Open-circuit leakage current		-
Response time*1		Approx. 10ms
Circuit isolation		Mechanical isolation
Operation indicators		Supplying power to the relay coil will light the LED indicator lamp on panel.
Power consumption		1.92W (80mA 24V DC)

*1. This response time does not include the response delay at the PLC.

20.7.2 Internal circuit

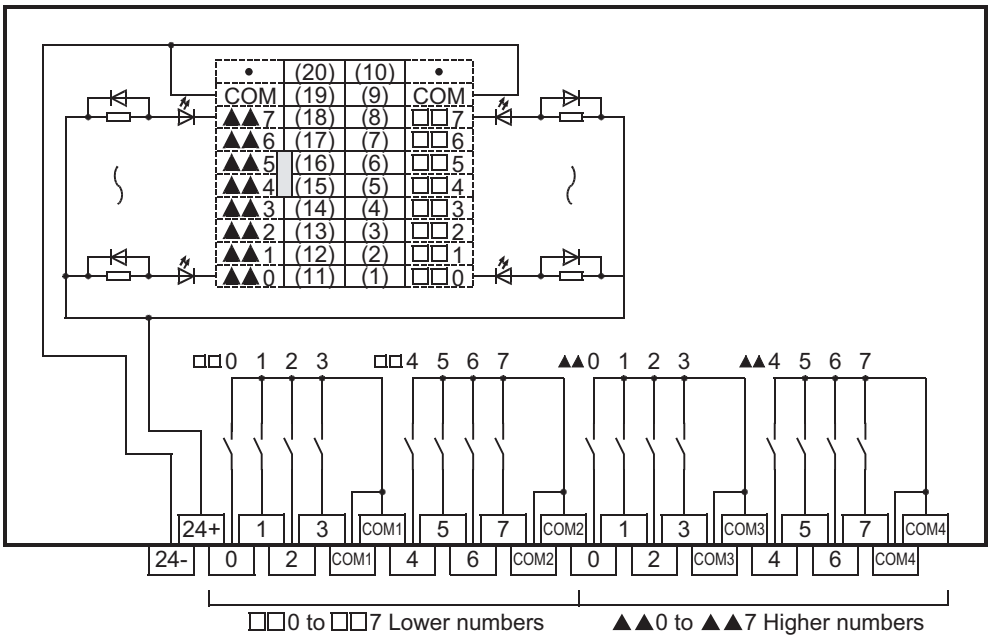

20.7.3 Example of output external wiring

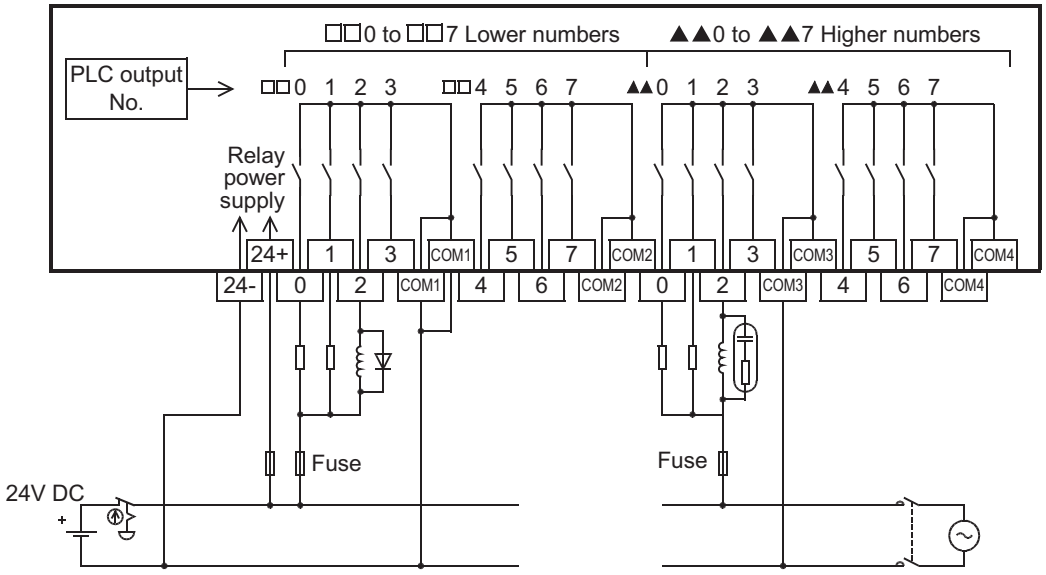

20.7.4 External wiring precautions

1. Protection circuit for load short-circuits

A short-circuit at a load connected to an output terminal could cause burnout at the output element or the PCB.
To prevent this, a protection fuse should be inserted at the output.

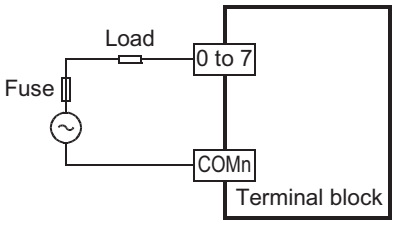

2. Contact protection circuit for inductive loads

An internal protection circuit for the relays is not provided for the relay output circuit in the terminal block. It is recommended to use inductive loads with built-in protection circuits. When using loads without built-in protection circuits, insert an external contact protection circuit, etc. to reduce noise and extend the product life.

1) DC circuit

Connect a diode (for commutation) parallel to the load. The diode (for commutation) must comply with the following specifications.

	Guide
Reverse voltage	5 to 10 times of the load voltage
Forward current	Load current or more

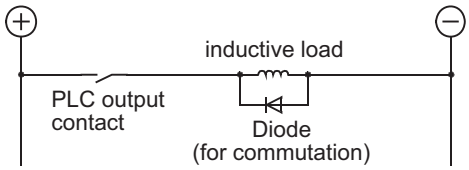

2) AC circuit

Connect the surge absorber (combined CR components such as a surge killer and spark killer, etc.), parallel to the load.
Select the rated voltage of a surge absorber that is suitable for the load being used. Refer to the table below for other specifications.

	Guide
Static electricity capacity	Approx. 0.1μF
Forward current	Approx. 100 to 200Ω

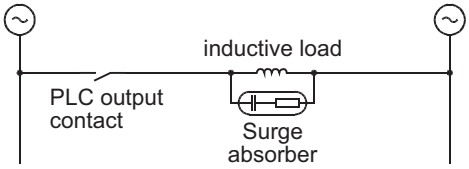

Reference

Manufacturer	Model name
Okaya Electric Industries Co., Ltd.	CR-10201

Manufacturer	Model name
Rubycon Corporation	250MCRA104100M B0325

3. Interlock

For loads such as forward/reverse contactors, etc., where a hazardous condition could result if switched ON simultaneously, an external interlock should be provided for interlocking the PLC's internal programs as shown to the right.

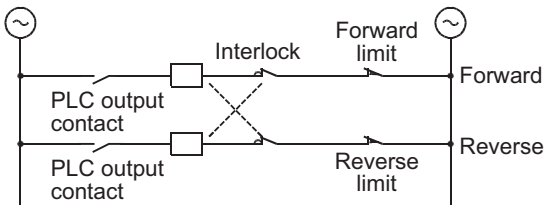

4. In-phase

PLC output contacts (*) should be used in an "in-phase" manner.

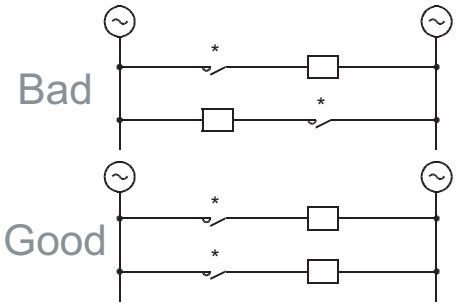

20.7.5 Product life of relay contacts

The product life of relay contacts varies considerably depending on the load type used. Take care that loads generating reverse electromotive force or rush current may cause poor contact or deposition of contacts which may lead to considerable reduction of the contact product life.

1. Inductive load

Inductive loads generate large reverse electromotive force between contacts at shutdown, which may cause arcing. At a fixed current consumption, as the power factor (phase between current and voltage) gets smaller, the arc energy gets larger.

The standard life of contacts used for Inductive loads, such as contactors and solenoid valves, is 500,000 operations at 35VA.
The following table shows the approximate life of a relay based on the results of an operation life test.

Test condition: 1 sec. ON / 1 sec.OFF

Load Capacity		Contact Life
35VA	0.35A / 100V AC	3,000,000 times
	0.17A / 200V AC	
80VA	0.8A / 100V AC	1,000,000 times
	0.4A / 200V AC	
120VA	1.2A / 100V AC	200,000 times
	0.6A / 200V AC	

The product life of relay contacts becomes considerably shorter than the above conditions when the rush overcurrent is shut down.

→ **For precautions on using inductive loads, refer to Subsection 20.7.4-2.**

Some types of inductive loads generate rush current 5 to 15 times the stationary current at activation. Make sure that the rush current does not exceed the current corresponding to the maximum specified resistance load.

2. Lamp load

Lamp loads generally generate rush current 10 to 15 times the stationary current. Make sure that the rush current does not exceed the current corresponding to the maximum specified resistance load.

3. Capacitive load

Capacitive loads can generate rush current 20 to 40 times the stationary current. Make sure that the rush current does not exceed the current corresponding to the maximum specified resistance load. Capacitive loads such as capacitors may be present in electronic circuit loads including inverters.

→ **For the maximum specified resistance load, refer to Subsection 20.7.1.**

20.8 FX-16EYT-TB, FX-16EYT-H-TB

The FX-16EYT(-H)-TB is used by connecting it to the FX2N series output extension block (transistor).

	Output Connector
Connectable models	FX2N-16EYT-C (sink output)

The applications shown below are not supported.

	Unsupported Applications
Pulse outputs	Pulse Y output (PLSY) instruction, acceleration/deceleration setup (PLSR) instruction, pulse width modulation (PWM) instruction, DOG search zero return (DSZR) instruction, batch data positioning mode (TBL) instruction, absolute current value read (ABS) instruction, zero return (ZRN) instruction, variable speed pulse output (PLSV) instruction, drive to increment (DRVI) instruction, drive to absolute (DRVA) instruction
Time division inputs	Input matrix (MTR) instruction, digital switch (DSW) instruction
Time division output	Seven segment with latch (SEGL) instruction

20.8.1 Specifications

Item		Transistor output	
		FX-16EYT-TB	FX-16EYT-H-TB
Input/output circuitry		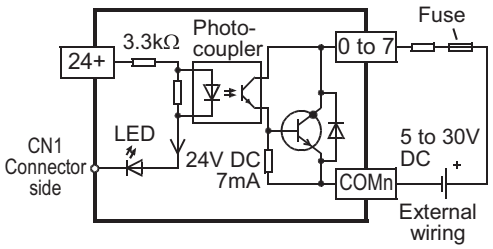	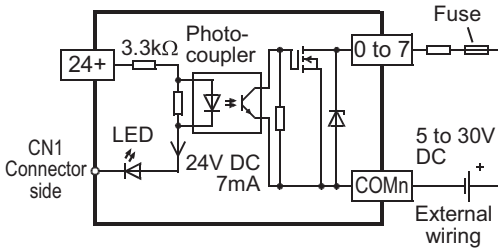
Load voltage		5 to 30V DC	
Max. load	Resistance load	0.5A/point The total load current of resistance loads per common terminal should be the following value. • 4 output points/common terminal: 0.8A or less	1A/point The total load current of resistance loads per common terminal should be the following value. • 4 output points/common terminal: 3A or less
	Inductive load	12W/24V DC	
Open-circuit leakage current		0.1mA / 30V DC	
Response time	OFF→ON*1	0.2ms or less/24V DC	0.3ms or less/24V DC
	OFF→ON*1	1.5ms or less/24V DC	4ms or less/24V DC
Output element's ON voltage		1.5V	
Circuit isolation		Photo-coupler isolation	
Operation indicators		Activation of the photo-coupler will light the LED indicator lamp on panel.	
Power consumption		2.7W (112mA 24V DC)	

*1. This response time does not include the response delay at the PLC.

20.8.2 Internal circuit

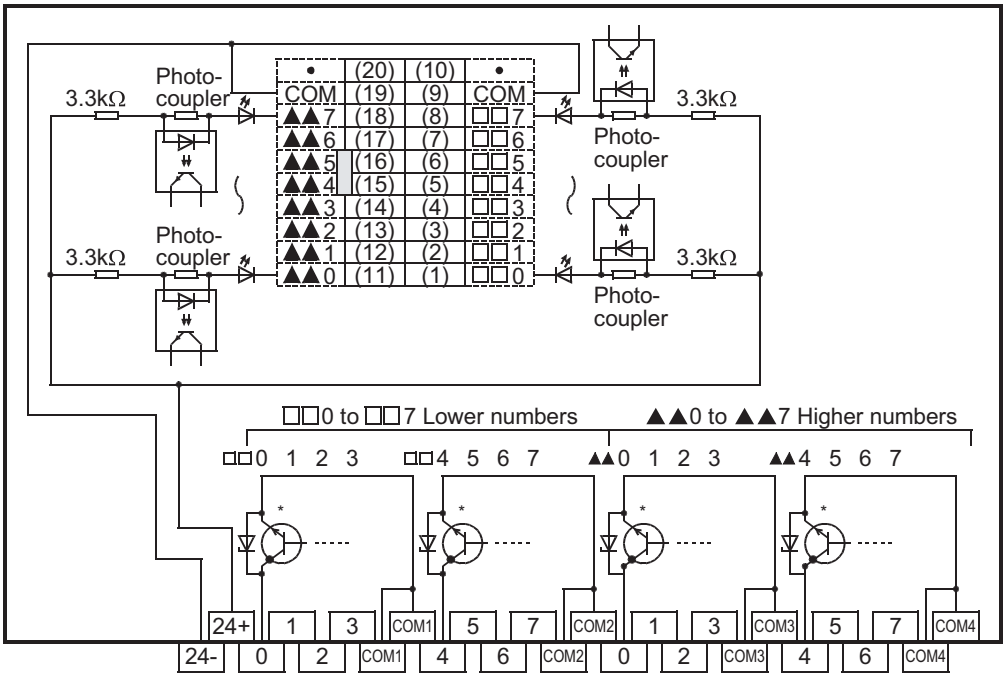

* For the FX-16EYT-H-TB, the output transistor elements are as shown in the figure below.

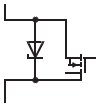

20.8.3 Example of output external wiring

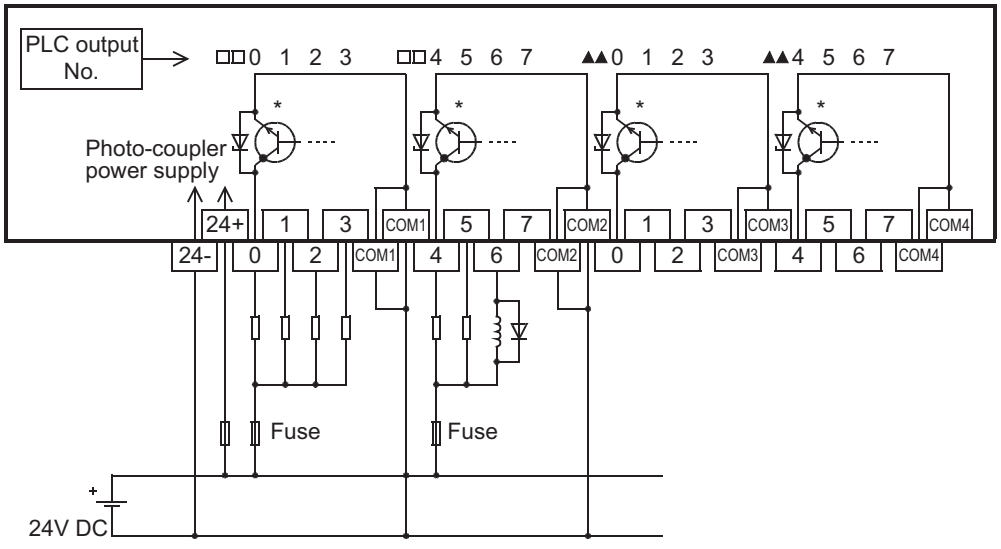

* For the FX-16EYT-H-TB, the output transistor elements are as shown in the figure below.

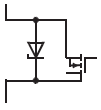

20.8.4 External wiring precautions

1. Protection circuit for load short-circuits

A short-circuit at a load connected to an output terminal could cause burnout at the output element or the PCB.
To prevent this, a protection fuse should be inserted at the output. Use a load power supply capacity that is at least 2 times larger than the total rated fuse capacity.

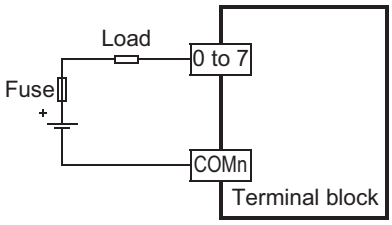

2. Transistor protection circuit for inductive loads

The transistor output circuit in the terminal block is equipped with a Zener diode (50V) for protection.
When an inductive load is connected, however, a diode should be connected parallel to the load when required. The diode must comply with the specifications shown below.

Reverse voltage	5 to 10 times of the load voltage
Forward current	Load current or more

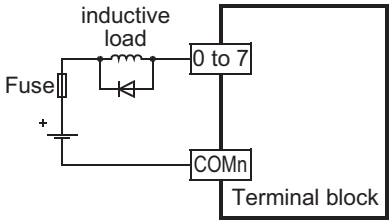

3. Interlock

For loads such as forward/reverse contactors, etc., where a hazardous condition could result if switched ON simultaneously, an external interlock should be provided for interlocking the PLC's internal programs as shown to the right.

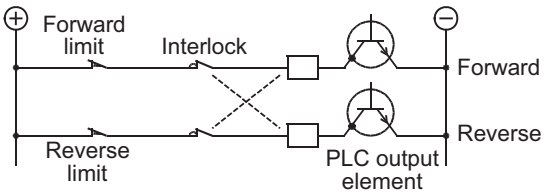

20.9 FX-16EYS-TB

The FX-16EYS-TB is used by connecting it to the FX2N series output extension block (transistor).

	Output Connector
Connectable models	FX2N-16EYT-C (sink output)

The applications shown below are not supported.

	Unsupported Applications
Pulse outputs	Pulse Y output (PLSY) instruction, acceleration/deceleration setup (PLSR) instruction, pulse width modulation (PWM) instruction, DOG search zero return (DSZR) instruction, batch data positioning mode (TBL) instruction, absolute current value read (ABS) instruction, zero return (ZRN) instruction, variable speed pulse output (PLSV) instruction, drive to increment (DRVI) instruction, drive to absolute (DRVA) instruction
Time division inputs	Input matrix (MTR) instruction, digital switch (DSW) instruction
Time division output	Seven segment with latch (SEGL) instruction

20.9.1 Specifications

Item		Triac output	
Input/output circuitry		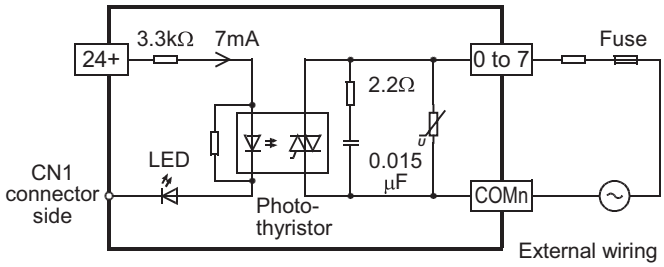	
Load voltage		85 to 242V AC	
Max. load	Resistance load	0.3A/point*1	The total load current of resistance loads per common terminal should be the following value. • 4 output points/common terminal: 0.8A or less
	Inductive load	15VA/100V AC 36VA/200V AC	
Min. load		0.4VA/100V AC 1.6 VA/200V AC	
Open-circuit leakage current		1mA/100V AC 2mA/200V AC	
Response time*2		2ms or less	
Circuit isolation		Photocoupler isolation	
Operation indicators		Activation of the photo-thyristor will light the LED indicator lamp on panel.	
Power consumption		2.7W (112mA 24V DC)	

*1. In systems where frequent large-load ON/OFF switching occurs due to rush currents, the root mean square current should be 0.2 A or less.

<Example>

$$\sqrt{\frac{4^2 \times 0.02 + 0.4^2 \times 0.7}{0.02 + 0.7 + 10}} = 0.2A$$

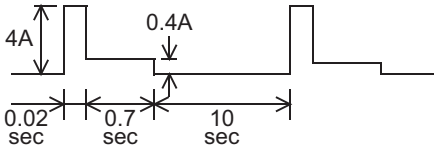

*2. This response time does not include the response delay at the PLC.

20.9.2 Internal circuit

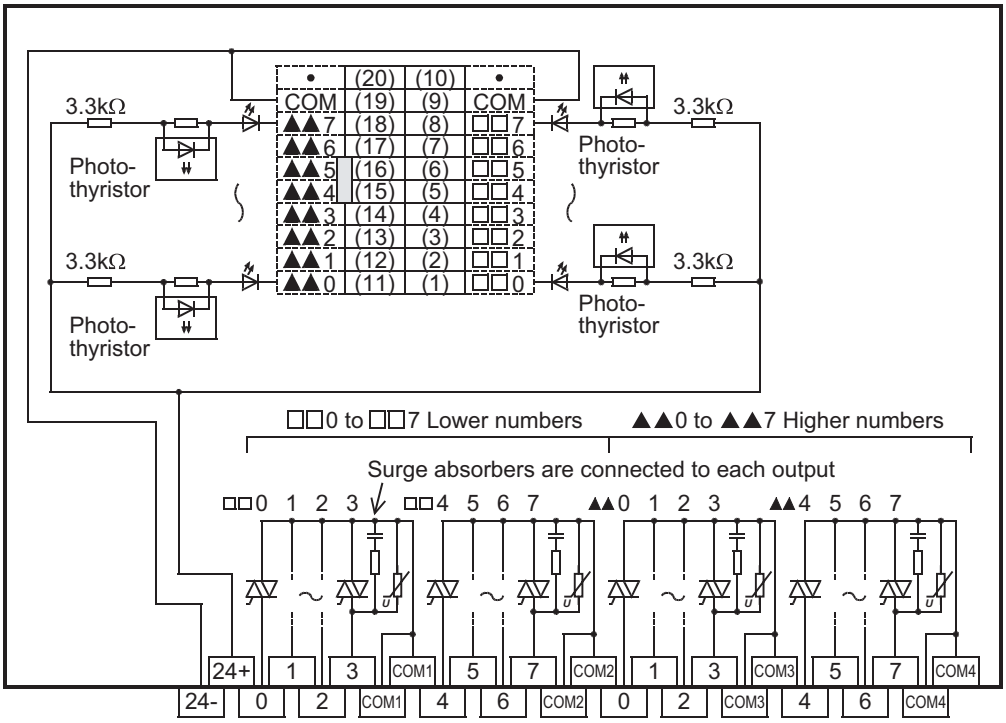

20.9.3 Example of output external wiring

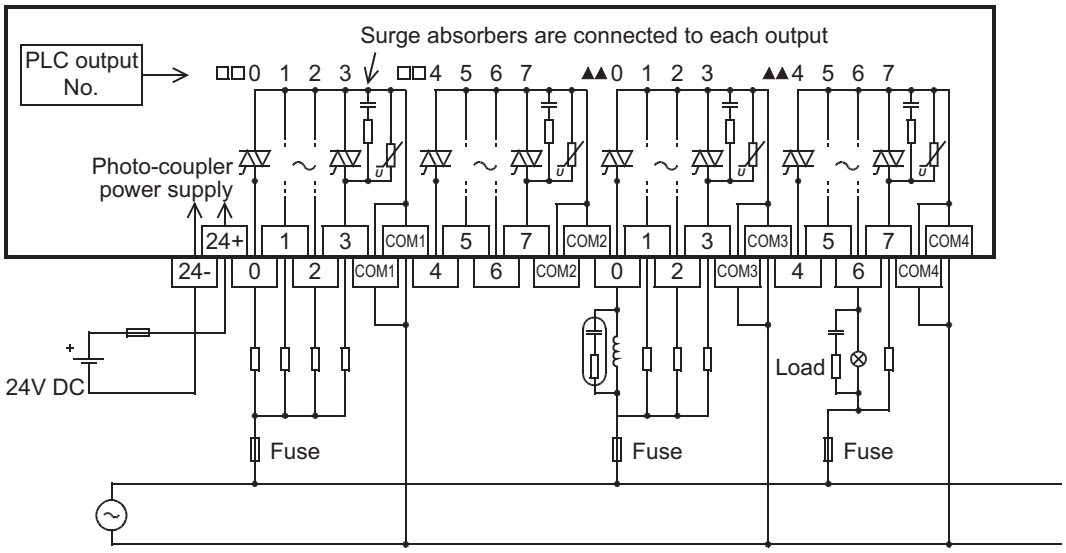

20.9.4 External wiring precautions

1. Protection circuit for load short-circuits

A short-circuit at a load connected to an output terminal could cause burnout at the output element or the PCB.
To prevent this, a protection fuse should be inserted at the output.

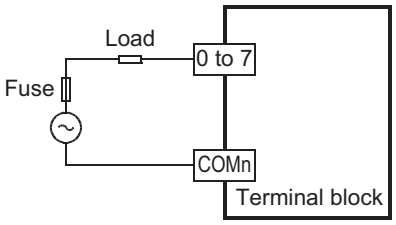

2. Micro current load

The PLC's internal Triac output circuit is equipped with a turn-off C-R absorber. When connecting a very low current load of "0.4VA/100V AC or less or 1.6VA/200V AC or less", please connect a surge absorber parallel to the load.
Select the rated voltage of a surge absorber that is suitable for the load being used. Refer to the table below for other specifications.

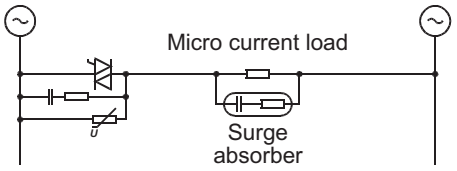

	Guide
Static electricity capacity	Approx. 0.1μF
Resistance value	Approx. 100 to 200Ω

Reference

Manufacturer	Model name
Okaya Electric Industries Co., Ltd.	CR-10201

Manufacturer	Model name
Rubycon Corporation	250MCRA104100M B0325

3. Interlock

For loads such as forward/reverse contactors, etc., where a hazardous condition could result if switched ON simultaneously, an external interlock should be provided for interlocking the PLC's internal programs as shown to the right.

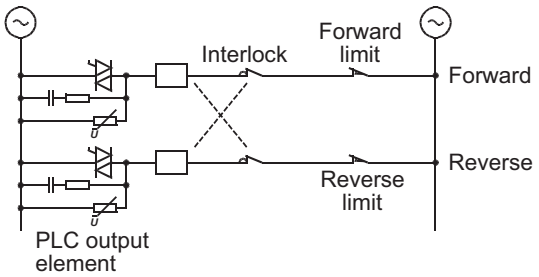

4. In-phase

PLC output contacts (*) should be used in an "in-phase" manner.

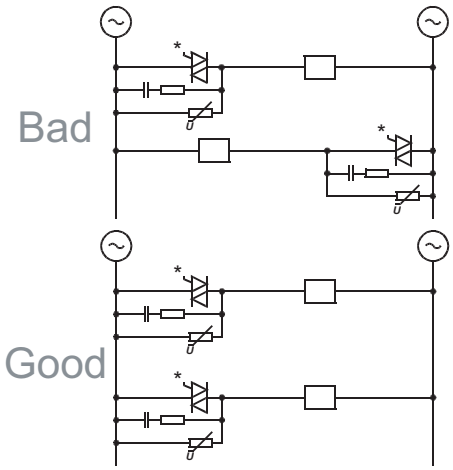

21. Memory Cassette

STARTUP AND MAINTENANCE PRECAUTIONS ⚠CAUTION

- Turn off the power to the PLC before attaching or detaching the memory cassette. If the memory cassette is attached or detached while the PLC's power is on, the data in the memory may be destroyed, or the memory cassette may be damaged.
- Do not disassemble or modify the PLC.
  Doing so may cause fire, equipment failures, or malfunctions.
  For repair, contact your local Mitsubishi Electric distributor.

21.1 Outline

The memory cassette can be installed at the main unit, and when installed, the memory cassette's internal program is used in place of the internal EEPROM memory. The loader function transfers (reads and writes) programs between the memory cassette and the internal EEPROM.

21.2 Specifications

21.2.1 Electrical specifications

Model Name	Max. Memory Capacity	Memory Type	Max. Allowable Write	PROTECT Switch	Loader Function	Compatible Versions
FX3G-EEPROM-32L	32000 steps (2k/4k/8k/16k selectable)	EEPROM memory	10,000 times	Provided	Provided	1st article (Ver.1.00)

21.2.2 Part names and External dimensions

FX3G-EEPROM-32L

Units: mm (inches)

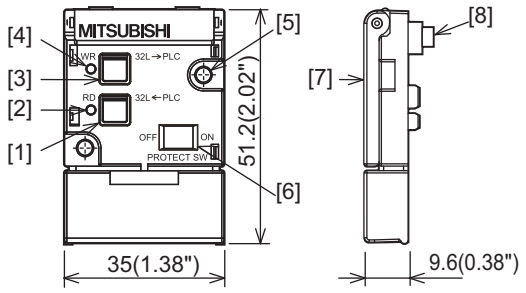

[1]RD key
(Reading: PLC ⇒ memory cassette)
[2]RD LED
[3]WR key
(writing: memory cassette ⇒ PLC)
[4]WR LED
[5]Memory cassette fixing holes
(2-ϕ3.2 Mounting holes)
[6]PROTECT switch
[7]Detachment lever
[8]Main unit connector

21.3 Installation

Be sure that the power is OFF when installing the memory cassette.

21.3.1 Installation (when the expansion board/connector conversion adapter is not used together)

The FX3G-40MT/ES is used as the main unit in this example.

1 **Remove the top cover.**

Remove the top cover (A in the right figure) as shown in the right figure.

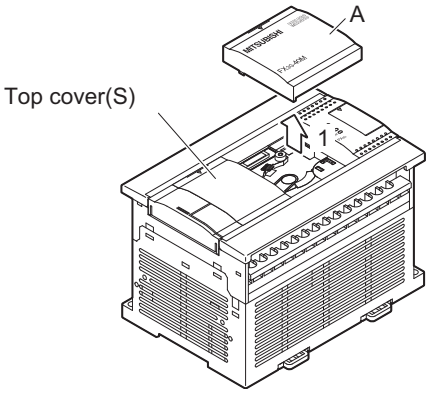

2 **Attach the side cover.**

Attach the side cover (B in the right figure) as shown in the right figure.

Caution:

- Make sure to attach the side cover before the memory cassette. However, attachment of the side cover is not necessary when using only the loader function and not always connecting the memory cassette.
- Attachment of the side cover is not necessary when installing the memory cassette under the top cover (S) of a 40/60-point type main unit.

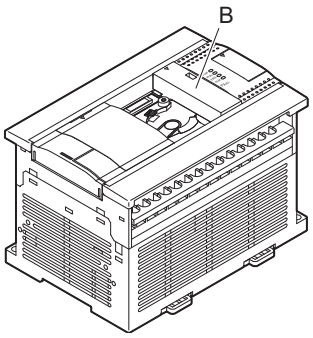

3 **Raise the memory cassette detachment lever.**

Raise the memory cassette detachment lever ("C").

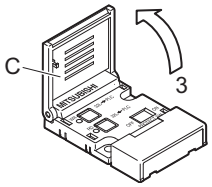

4 **Attach the memory cassette.**

Install the memory cassette to the main unit.

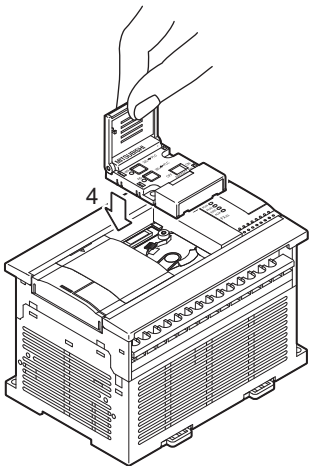

5 **The memory cassette (E in the right figure) can be fixed with provided M3 tapping screws (D in the right figure) to the main unit.This work is not required when fixation is not necessary.**

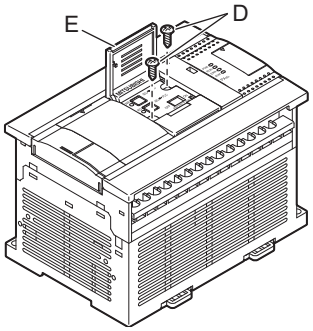

- Tightening torque : 0.3 to 0.6 N•m

Caution:

- Two types of M3 tapping screws are provided.
  Use M3 x 8 (shorter) screws.
  Do not use M3 x 16 (longer) screws because they may damage the main unit.

21.3.2 Installation (when the expansion board/connector conversion adapter is used together)

The FX3G-40MT/ES is used as the main unit and the expansion board is used together in this example.

1 **Attach the expansion board/connector conversion adapter to the main unit.**

→ **For the attachment method, refer to Chapter 8.**

Caution:
Make sure to attach the expansion board/connector conversion adapter before the memory cassette. Tightening with tapping screws (M3 x 8) is not necessary.

2 **Remove the upper connector cover (A in the right figure).**

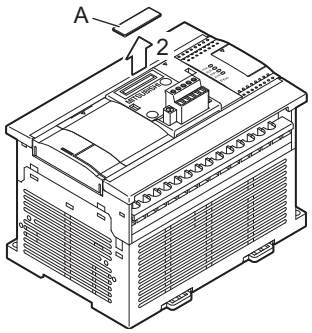

3 **Remove the part B shown in the right figure using snipper, etc.**

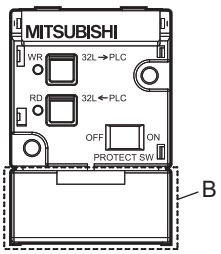

Caution:
Removal of the part B is not necessary when the connector conversion adapter is used together.

4 **Raise the memory cassette detachment lever.**

Raise the memory cassette detachment lever ("C").

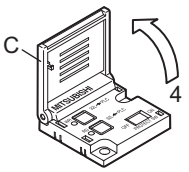

5 Attach the memory cassette to the option connector of the expansion board/connector conversion adapter.

Attach the memory cassette to the option connector (E in the right figure) of the expansion board/connector conversion adapter.

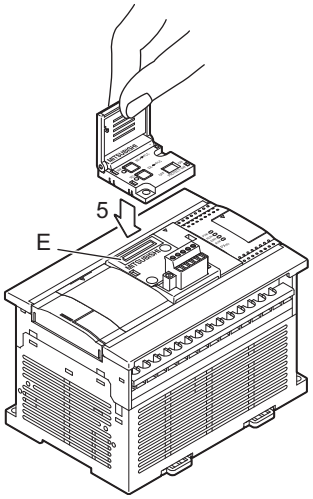

6 Fix the memory cassette (G in the right figure) with provided M3 tapping screws (F in the right figure) to the expansion board/connector conversion adapter.

- Tightening torque : 0.3 to 0.6 N•m

Caution:

- Two types of M3 tapping screws are provided.
  Use M3 x 16 (longer) screws.
- Fixation is not necessary when using only the loader function and not always connecting the memory cassette.

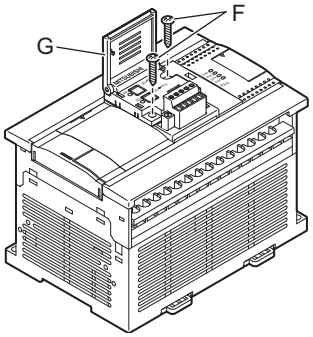

21.4 Removal

Be sure that the power is OFF when removing the memory cassette.

21.4.1 Removal (when the expansion board/connector conversion adapter are not used together)

The FX3G-40MT/ES is used as the main unit in this example.

1 **Raise the memory cassette detachment lever.**

Raise the memory cassette detachment lever ("A").

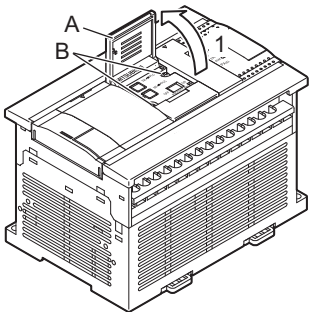

2 **Remove the tapping screws (B in the right figure) which fix the memory cassette.**

Proceed to the step 3 when the memory cassette is not fixed with tapping screws.

3 **Grasp the detachment lever and pull it.**

Grasp the detachment lever ("C") and pull it vertically to remove the memory cassette.

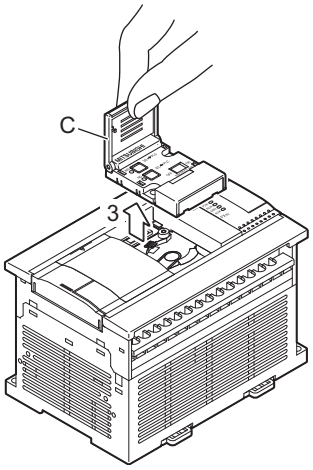

4 **Remove the side cover.**

Remove the side cover (D in the right figure) as shown in the right figure.

Caution:
The side cover is not attached when the memory cassette is installed under the top cover (S) of a 40/60-point type main unit.

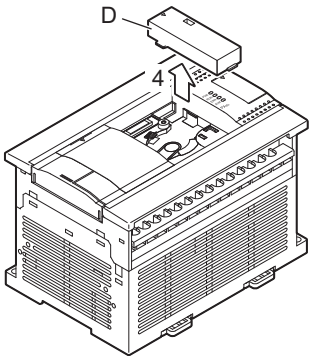

5 **Attach the top cover.**

Attach the top cover (E in the right figure) as shown in the right figure.

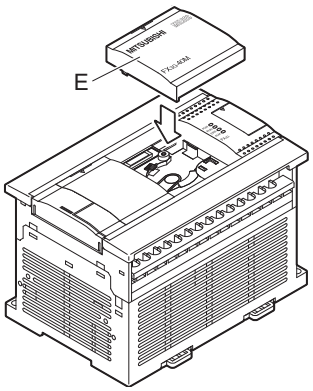

21.4.2 Removal (when the expansion board/connector conversion adapter are used together)

The FX3G-40MT/ES is used as the main unit and the expansion board is used together in this example.

1 **Raise the memory cassette detachment lever.**

Raise the memory cassette detachment lever ("A").

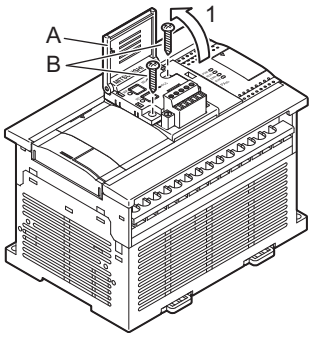

2 **Remove the tapping screws (B in the right figure) which fix the memory cassette.**

Proceed to the step 3 when the memory cassette is not fixed with tapping screws.

3 **Grasp the detachment lever and pull it.**

Grasp the detachment lever ("D") and pull it vertically to remove the memory cassette.

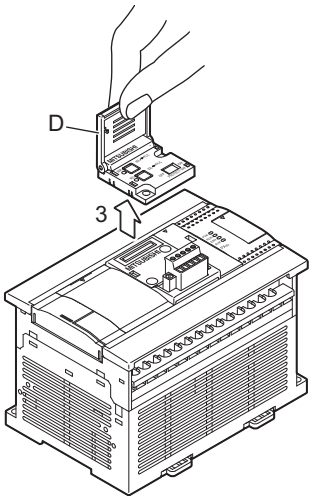

4 **Attach the upper connector cover (E in the right figure).**

5 **Fix the expansion board with the tapping screws (F in the right figure) provided for fixing the memory cassette.**

- Tightening torque : 0.3 to 0.6 N•m

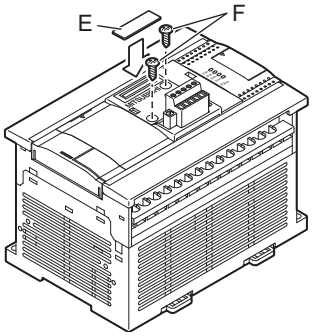

Caution:

- Two types of M3 tapping screws are provided.
  Use M3 x 8 (shorter) screws.
  Do not use M3 x 16 (longer) screws removed in the step 2 because they may damage the main unit.

21.5 Saved Data Content

The following data is saved on the memory cassette.

Item		Description		Saving Method
Program Memory	Parameters	• Memory capacity setting - Memory capacity (default setting: 8k steps) 2k/4k/8k/16k/32k steps - Comment capacity - File register capacity • Modem initializing settings, Battery mode settings, RUN terminal settings • RS/RS2 instructions / computer link function communication settings • Positioning settings		Programming tool *1
	Sequence programs	User-created sequence programs	Comments and file registers can be created in the memory by setting them in the parameter memory capacity.	
	Comments	Max. 3150 points (0 to 63 blocks, 1 block = 50 points / 500 steps)		
	File registers	Max. 7000 points (0 to 14 blocks, 1 block = 500 points / 500 steps)		
Extended file registers		ER0 to ER23999 (24000 points)		• Sequence program • GX Developer

*1. The maximum number of points for the memory capacity, comments, and file registers, can be specified when the FX3G programming tool is selected. The maximum number of points cannot be specified when a programming tool other than the FX3G is selected.

21.6 PROTECT Switch

21.6.1 PROTECT switch setting

Reading from and writing to memory cassette operations can be performed by using the programming tool.
Because sequence programs are written by an electronic format, a special ROM writer and ultraviolet eraser are not required.
The PROTECT switch must be turned OFF to enable writing.

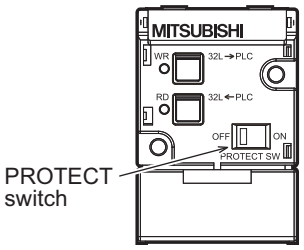

21.6.2 PROTECT switch operation

1. Preparing the operation tools

Set the PROTECT switch knob by using the tip of a pair of tweezers, a precision screwdriver, or a tool with a tip width of approx. 0.8mm (0.04").
Do not use objects with round tips, as the round tip can easily slip off the switch knob, possibly resulting in an incorrect setting.

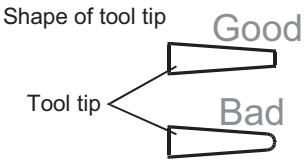

2. Switch operation procedure

As shown in the figure below, the switch knob can be "pushed" or "pulled". When setting the switch, do not set it in an intermediate position.

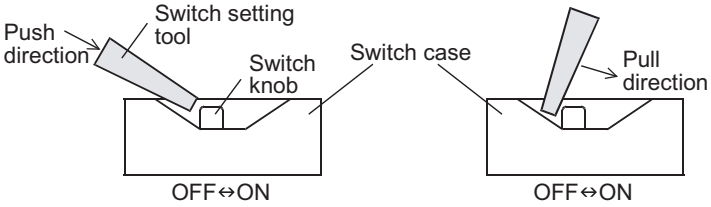

21.6.3 Precautions when setting and using the switch

- Leaving the switch knob at an intermediate position for an extended period can cause an equipment failure.

21.7 Memory Cassette <-> PLC (EEPROM Memory) Transfers by Loader Function

The FX3G-EEPROM-32L loader function ([WR] and [RD] key operation) is explained in this section.

- Program transfers (reading/writing) are possible between the memory cassette and the PLC's internal EEPROM memory.
- The loader function is enabled while the PLC is stopped.
- When the display module is connected, data can be transferred from the memory cassette by performing the data transfer procedure in the display module.
  (It is not possible to transfer data from the memory cassette by performing the data transfer procedure in the memory cassette.)

→ **For the data transfer method in the display module, refer to Chapter 20.**

21.7.1 Writing (WR: 32L -> PLC)

A memory cassette program is written to the PLC's internal EEPROM memory.

Required condition: The PLC must be stopped.

1 Install the memory cassette on the main unit.

(Setting the PROTECT switch to ON (on memory cassette's rear face) prevents accidental overwriting of memory cassette program.)

→ **Refer to Section 21.3 for the installation procedure.**

- Verify that the PLC power is OFF, then install the memory cassette on the PLC.
- Turn the PLC power ON.
- Raise the memory cassette's eject lever.

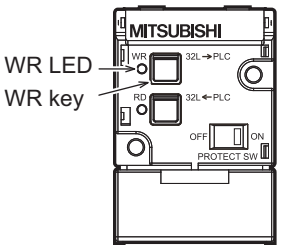

2 Press the [WR] key 1 time.

The [WR] LED lights, and a preparation status is established.

- To cancel, press the [RD] key.

3 Press the [WR] key again.

Writing is executed, and the [WR] LED blinks.

- It takes several seconds to write data to the built-in EEPROM. The WR LED flickers while data is written.

4 Remove the memory cassette from the main unit.

Writing is completed when the [WR] LED goes off.
After turning the PLC power OFF, remove the memory cassette from the PLC.

→ **Refer to Section 21.4 for the removal procedure.**

21.7.2 Reading (RD: 32L <- PLC)

Programs are read from the PLC's internal RAM memory to the memory cassette.
Required condition: The PLC must be stopped, and the PROTECT switch must be OFF.

1 **Install the memory cassette on the main unit.**

→ **Refer to Section 21.3 for the installation procedure.**

- Verify that the PLC power is OFF, then install the memory cassette on the PLC.
  (Set the PROTECT switch to OFF.)
- Turn the PLC power ON.
- Raise the memory cassette's eject lever.

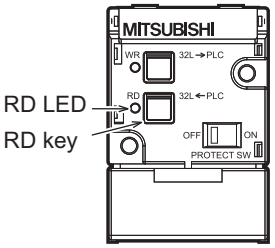

2 **Press the [RD] key 1 time.**

The [RD] LED lights, and a preparation status is established.

- To cancel, press the [WR] key.

3 **Press the [RD] key again.**

Reading is executed, and the [RD] LED blinks.

- It takes several seconds to read data from the built-in EEPROM. The RD LED flickers while data is read.

4 **Remove the memory cassette from the main unit.**

Reading is completed when the [RD] LED goes off.
After turning the PLC power OFF, remove the memory cassette from the PLC, then turn the PROTECT switch ON.

→ **Refer to Section 21.4 for the removal procedure.**

21.8 Operation Precautions

1. **Tapping screws provided for fixing the memory cassette**
   Two types of (longer and shorter) M3 tapping screws are packed together with the memory cassette.
   Read carefully the installation method described in Section 21.3, and use the proper type.

2. **Number of available units**
   Only one memory cassette may be connected to a FX3G main units.

3. **EEPROM memory writing count**
   10,000 writing operations are permitted at the EEPROM memory.

4. **Precaution for file register (D) usage**
   Writing to the flash memory occurs at each PLC operation cycle if BMOV instructions are used in a continuous execution format with regard to a file register.
   To prevent this, be sure to use "pulse execution format" (BMOVP) instructions.

5. **Precaution for extended file register (ER) usage**
   Do not use continuous constant-execution RWER instructions with regard to extended file registers.
   Use the individual instructions only when required.

6. **Loader function when the display module is used together**
   When the display module is used together, the loader function is enabled by performing the transfer procedure in the display module.
   Data is not transferred even if the transfer procedure is performed in the memory cassette.
   For the data transfer procedure in the display module, refer to Chapter 20.

22. Battery

STARTUP AND MAINTENANCE PRECAUTIONS ⚠ **DANGER**

- Make sure to connect the battery for memory backup correctly.
  Do not charge, disassemble, heat, short-circuit, or expose the battery to fire.
  Doing so may rupture or ignite it.

STARTUP AND MAINTENANCE PRECAUTIONS ⚠ **CAUTION**

- Turn off the power to the PLC before attaching or detaching the following devices.
  Failure to do so may cause equipment failures or malfunctions.
  - Peripheral devices, expansion boards, and special adapters
  - Extension units/blocks and FX Series terminal blocks
  - Battery and memory cassette

TRANSPORTATION PRECAUTIONS ⚠ **CAUTION**

- When transporting the FX3G Series PLC incorporating the optional battery, turn on the PLC before shipment, confirm that the battery mode is set using a parameter and the ALM LED is OFF, and check the battery life.
  If the PLC is transported with the ALM LED on or the battery exhausted, the battery-backed data may be unstable during transportation.

The battery is not incorporated in the PLC main unit at shipment from the factory.
Order it if necessary.

22.1 Battery Purpose

The battery backs up the following contents against power interruption.
Proper parameter setting is required to back up the device memory and current time.

→ **For the parameter setting method, refer to Section 22.3.**

Item	Data Retained By Backup Battery
Device memory	Auxiliary relay M1536 to M7679, state S1000 to S4095, data register D1100 to D7999, extended register R0 to R23999
Current time*1	Current time clock

*1. The data is backed up by the large-capacity capacitor built in the PLC at shipment from the factory.

→ **For backup by the capacitor, refer to Section 4.5.**

22.2 Specifications

Item	Specifications	Remarks
Nominal voltage	3V	Battery voltage can be monitored with PLC data register D8005.

22.3 Setting for Battery

The battery is not incorporated in the main unit at shipment from the factory. It is necessary to attach the optional battery if backup is required.
In addition, the battery mode is set via a parameter.

22.3.1 Attaching the battery

The FX3G-40MT/ES is used as the main unit in this example.

1 **Turn the power OFF.**

2 **Remove the top cover (A in the right figure).**

When the expansion board, connector conversion adaptor or memory cassette is attached, remove it.

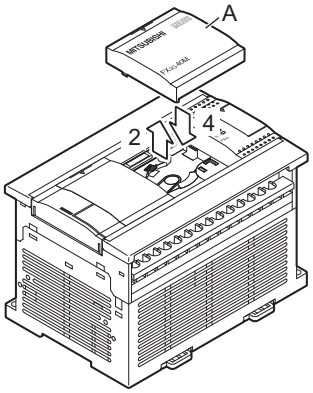

3 **Attach the battery.**

Insert the battery connector (B in the right figure) of the battery.

Push the battery into the battery holder (C in the right figure).

Set the battery cable as shown in D in the right figure.

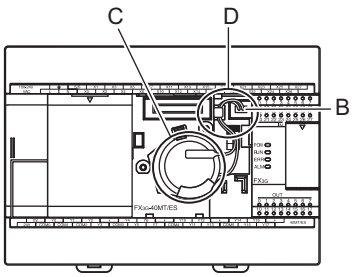

4 **Attach the top cover.**

When the expansion board, connector conversion adaptor or memory cassette was removed in the step 2, attach it again.

22.3.2 Setting the battery mode (GX Developer Ver. 8.72A or later)

The following setting using a parameter is required to use the battery.
Note that the battery does not back up the data if the following setting is not provided.

→ **For the backup target data, refer to Section 22.1.**

- On the "PLC system[1]" tab on the "FX parameter" window, check the check box "Use Battery". (Refer to the window below.)

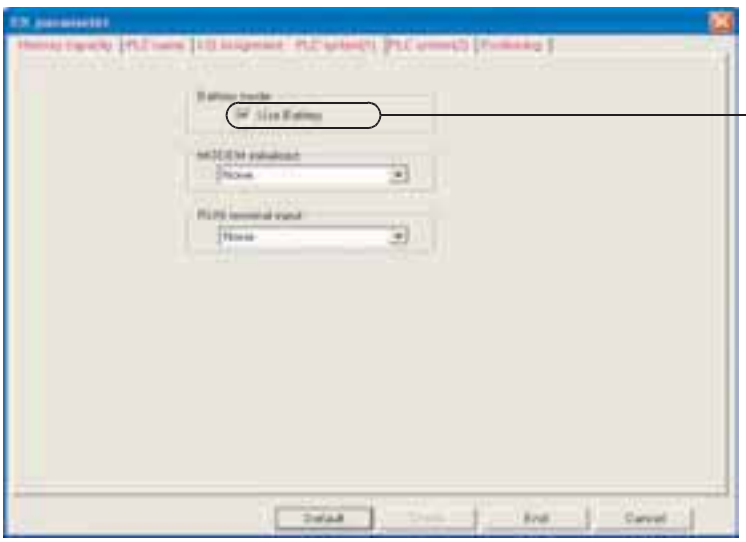

22.4 Battery Handling

When the battery voltage is low, a "ALM" LED lights (red) while the power is ON, and M8005 and M8006 are switches ON.
Although the battery will continue to function for approximately 1 month after the "BATT" LED switches ON, a replacement battery should be ordered and installed as soon as possible.

22.4.1 Battery life and replacement guidelines

FX3U-32BL battery life : Approx. 5 years (ambient temperature : 25°C(77°F))

[Guarantee period: 1 year after delivery or 18 months after production]
The life of the battery changes with respect to ambient temperature. When planning for battery replacement, please estimate the battery life according to the graph to the right and order the replacement batteries in advance.

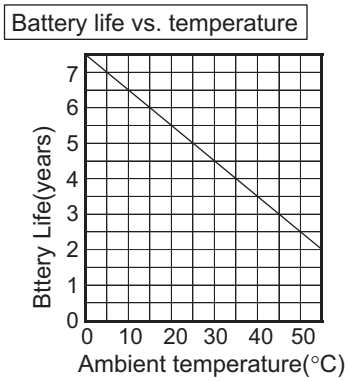

22.4.2 Reading the date of manufacture

How to read the battery lot number (reference)

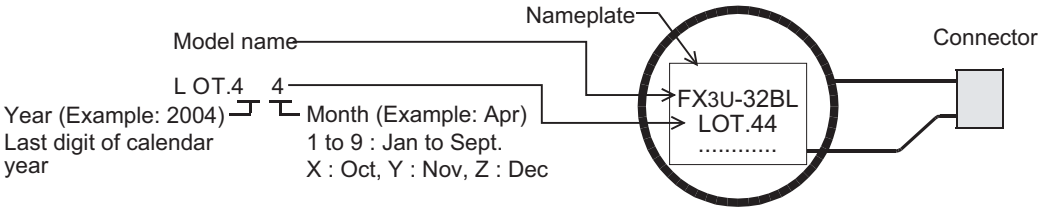

22.4.3 Special "battery low-voltage" device & notification program example

Prepare a system which allows constant external monitoring of the battery status, using an indicator lamp, etc.

- M8005

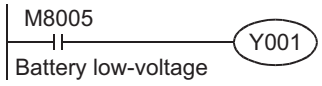

Y001 is output when a battery low-voltage condition occurs.

- M8006
  Battery low-voltage is latched.
- D8005
  Battery voltage can be monitored.

22.5 Battery Replacement

Before replacing the battery
Step 4 of the replacement procedure (below), must be performed within 20 seconds after step 3, or the memory content could be lost.

The FX3G-40MT/ES is used as the main unit in this example.

1 Turn the power OFF.

2 Remove the top cover (A in the right figure).

When the expansion board, connector conversion adaptor or memory cassette, remove it.

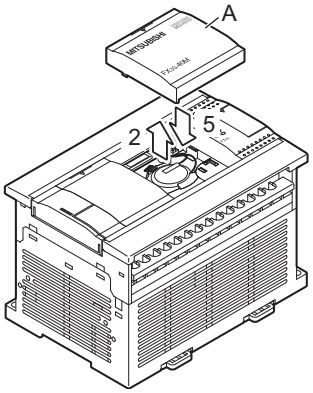

3 Remove the old battery.

Extract the old battery from the battery holder ("B"), and disconnect the battery connector ("C").

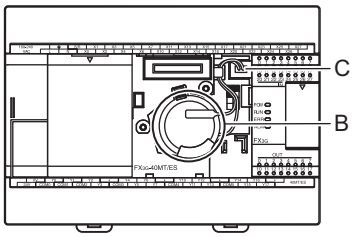

4 Install the new battery.

→ **For the installation procedure, refer to Subsection 22.3.1.**

5 Attach the top cover.

When the expansion board, connector conversion adaptor or memory cassette was removed in the step 2, attach it again.

Cation

1) After replacing the battery, check whether the backup target devices (keep devices) and clock data are backed up correctly, confirm safety, and then run the PLC.
2) If the backup target devices (keep devices) are not backed up correctly, clear them, and set their initial values and clock data again if necessary.
→ **For the clear method of keeping devices, refer to the programming manual.**

22.6 Battery Related Precautions

1. **The FX3G series uses a different battery type than those used for the FX2N (F2-40BL) and FX2NC (FX2NC-32BL) series.**
   - Not for use with the FX3G series.
2. **Make sure to select the battery mode using a parameter when using the battery.**

Appendix A: Special Device List

The device numbers and functions of the special auxiliary relays (indicated as "special M" in tables) and special data registers (indicated as "special D" in tables) are shown below.
Note that functions of certain devices vary depending on the series of the PLC.
Do not use the undefined / blank special auxiliary relays and special data registers in the sequence program since they are occupied by the CPU.
In addition, do not activate or write to the devices with brackets on the first letter such as [M]8000 or [D]8001 in the program.

→ **For detailed explanation, refer to the Programming Manual.**

Appendix A-1 Special Auxiliary Relay (M8000 to M8511)

Number and name	Operation and function	Corresponding special device
PLC Status		
[M]8000 RUN monitor NO contact	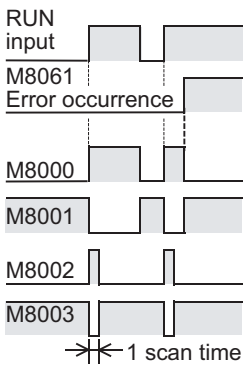	-
[M]8001 RUN monitor NC contact		-
[M]8002 Initial pulse NO contact		-
[M]8003 Initial pulse NC contact		-
[M]8004 Error occurrence	ON when either M8060, M8061, M8064, M8065, M8066, or M8067 is ON.	D8004
[M]8005 Battery voltage low	ON when battery voltage is below the value set in D8006.	D8005
[M]8006 Battery error latch	It is set when battery voltage low is detected.	D8006
[M]8007	Not used	-
[M]8008		-
[M]8009 24V DC down	ON when 24V DC power fails in either input/output powered extension unit or extension power supply unit.	D8009

Number and name	Operation and function	Corresponding special device
Clock		
[M]8010	Not used	-
[M]8011 10ms clock pulse	ON and OFF in 10ms cycle (ON: 5ms, OFF: 5ms)	-
[M]8012 100ms clock pulse	ON and OFF in 100ms cycle (ON: 50ms, OFF: 50ms)	-
[M]8013 1sec clock pulse	ON and OFF in 1sec cycle (ON: 500ms, OFF: 500ms)	-
[M]8014 1min clock pulse	ON and OFF in 1min cycle (ON: 30sec, OFF: 30sec)	-
M 8015	Clock stop and preset For real time clock	-
M 8016	Time read display is stopped For real time clock	-
M 8017	±30 seconds correction For real time clock	-
[M]8018	Installation detection (Always ON) For real time clock	-
M 8019	Real time clock (RTC) error For real time clock	-
Flag		
[M]8020 Zero	ON when the result of addition/ subtraction is 0.	-
[M]8021 Borrow	ON when the result of subtraction is less than the min. negative number.	-
M 8022 Carry	ON when 'carry' occurs as a result of addition or when an overflow occurs as a result of shift operation.	-
[M]8023	Not used	-
M 8024*1	BMOV direction specification (FNC 15)	-
M 8025 to M 8027	Not used	-
M 8028	Interrupt permission during FROM/ TO (FNC 78 and 79) instruction execution.	-
[M]8029 Instruction execution complete	ON when operation such as DSW (FNC 72) is completed.	-

*1. Cleared when PLC switches from RUN to STOP.

Number and name	Operation and function	Corresponding special device
PLC Mode		
M 8030*1 Battery LED OFF	When M8030 set to ON, LED on PLC is not lit even if low battery voltage is detected.	-
M 8031*1 Non-latch memory all clear	If this special auxiliary relay is activated, the ON/OFF image memory of Y, M, S, T, and C, and present values of T, C, D, special data registers and R are cleared to zero. However, file registers (D) in program memory, and extension file registers (ER) in the memory cassette are not cleared.	-
M 8032*1 Latch memory all clear		-
M 8033 Memory hold STOP	When PLC is switched from RUN to STOP, image memory and data memory are retained.	-
M 8034*1 All outputs disable	All external output contacts of PLC are turned OFF.	-
M 8035 Forced RUN mode	Refer to Programming Manual for details.	-
M 8036 Forced RUN signal		-
M 8037 Forced STOP signal		-
[M]8038 Parameter setting	Communication parameter setting flag (for N:N network setting)	D8176 to D8180
M 8039 Constant scan mode	When M8039 is ON, PLC waits until scan time specified in D8039 and then executes cyclic operation.	D8039

*1. Executed at END instruction

Step Ladder and Annunciator		
M 8040 Transfer disable	While M8040 is turned ON, transfer between states is disabled.	-
[M]8041*2 Transfer start	Transfer from initial state is enabled in automatic operation mode.	-
[M]8042 Start pulse	Pulse output is given in response to a start input.	-
M 8043*2 Zero return complete	Set this in the last state of zero return mode.	-
M 8044*2 Zero point condition	Set this when machine zero return is detected.	-
M 8045 All output reset disable	Disables the 'all output reset' function when the operation mode is changed.	-
[M]8046*3 STL state ON	ON when M8047 is ON and either of S0 to S899 or S1000 to S4095 is active.	M8047
M 8047*3 STL monitoring enable	D8040 to D8047 are enabled when M8047 is ON.	D8040 to D8047
[M]8048*3 Annunciator operate	ON when M8049 is ON and either of S900 to S999 is ON.	-
M 8049*2 Annunciator enable	D8049 is enabled when M8049 is ON.	D8049 M8048

*2. Cleared when PLC switches from RUN to STOP.

*3. Executed at END instruction.

Number and name	Operation and function	Corresponding special device
Interrupt Disable		
M8050 (Input interrupt) I00□ disable*4	• If an input interrupt or timer interrupt occurs while a special auxiliary relay for that interrupt (M8050 - M8058) is ON, the interrupt will not operate. For example, turning M8050 ON disables the I00□ interrupt; hence, the interrupt routine is not processed even in an allowable program area. • If an input interrupt or timer interrupt occurs while a special auxiliary relay for that interrupt (M8050 - M8058) is OFF, a) The interrupt will be accepted. b) The interrupt routine will be processed promptly if it is permitted by the EI (FNC 04) instruction. However, if the DI (FNC 05) instruction disables interrupts, the interrupt program will not be processed until EI (FNC 04) permits the interrupts.	-
M8051 (Input interrupt) I10□ disable*4		-
M8052 (Input interrupt) I20□ disable*4		-
M8053 (Input interrupt) I30□ disable*4		-
M8054 (Input interrupt) I40□ disable*4		-
M8055 (Input interrupt) I50□ disable*4		-
M8056 (Timer interrupt) I6□□ disable*4		-
M8057 (Timer interrupt) I7□□ disable*4		-
M8058 (Timer interrupt) I8□□ disable*4		-
M 8059	Not used	-

*4. Cleared when PLC switches from RUN to STOP.

Error Detection		
[M]8060	I/O configuration error	D8060
[M]8061	PLC hardware error	D8061
[M]8062	Serial communication error [ch0]	D8062
[M]8063*5	Serial communication error 1 [ch1]*6	D8063
[M]8064	Parameter error	D8064
[M]8065	Syntax error	D8065 D8069 D8314 D8315
[M]8066	Ladder error	D8066 D8069 D8314 D8315
[M]8067*7	Operation error	D8067 D8069 D8314 D8315
M 8068	Operation error latch	D8068 D8312 D8313
M 8069*8	I/O bus check	-

*5. Cleared when PLC power supply from OFF to ON.

*6. Serial communication error 2 [ch2] PLC is detected by M8438.

*7. Cleared when PLC switches from STOP to RUN.

*8. When M8069 is ON, I/O bus check is executed.

Number and name	Operation and function	Corresponding special device
Parallel Link		
M 8070*1	Parallel link Set M8070 when using master station.	-
M 8071*1	Parallel link Set M8071 when using slave station.	-
[M]8072	Parallel link ON when operating	-
[M]8073	Parallel link ON when M8070 or M8071 setting is incorrect	-

*1. Cleared when PLC switches from STOP to RUN.

Pulse width/Pulse period measurement function		
[M]8075*2	Pulse width/Pulse period measurement setting flag	-
[M]8076*2	[X000] Pulse width/Pulse period measurement flag	D8074 to D8079
[M]8077*2	[X001] Pulse width/Pulse period measurement flag	D8080 to D8085
[M]8078*2	[X003] Pulse width/Pulse period measurement flag	D8086 to D8091
[M]8079*2	[X004] Pulse width/Pulse period measurement flag	D8092 to D8097
M 8080*2	[X000] Pulse period measurement mode	D8074 to D8079
M 8081*2	[X001] Pulse period measurement mode	D8080 to D8085
M 8082*2	[X003] Pulse period measurement mode	D8086 to D8091
M 8083*2	[X004] Pulse period measurement mode	D8092 to D8097

*2. Supported in Ver. 1.10 or later.

Flag		
[M]8090 to [M]8100	Not used	-
Memory Information		
[M]8101	Not used	-
[M]8102		-
[M]8103		-
[M]8104		-
[M]8105	ON when writing to EEPROM memory	-
[M]8106	Not used	-
[M]8107	Not used	-
[M]8108	Not used	-
Output Refresh Error		
[M]8109	Output refresh error	D8109
[M]8110 to [M]8119	Not used	-

Number and name	Operation and function	Corresponding special device
RS (FNC 80) and Computer Link [ch1]		
[M]8120	Not used	-
[M]8121*3	RS (FNC 80) instruction: Send wait flag	-
M 8122*3	RS (FNC 80) instruction: Send request	D8122
M 8123*3	RS (FNC 80) instruction: Receive complete flag	D8123
[M]8124	RS (FNC 80) instruction: Carrier detection flag	-
[M]8125	Not used	-
[M]8126	Computer link [ch1]: Global ON	D8127 D8128 D8129
[M]8127	Computer link [ch1]: On-demand send processing	
M 8128	Computer link [ch1]: On-demand error flag	
M 8129	Computer link [ch1]: On-demand Word/Byte changeover RS (FNC 80) instruction: Time-out check flag	

*3. Cleared when PLC switches from RUN to STOP or RS instruction is OFF.

Positioning [PLSY, PLSR instruction]		
M 8145	[Y000] Pulse output stop command	-
M 8146	[Y001] Pulse output stop command	-
[M]8147	[Y000] Pulse output monitor (BUSY/READY)	-
[M]8148	[Y001] Pulse output monitor (BUSY/READY)	-
Inverter Communication Function		
[M]8150	Not used	-
[M]8151*4	Inverter communication in execution [ch1]	D8151
[M]8152*4	Inverter communication error [ch1]	D8152
[M]8153*4	Inverter communication error latch [ch1]	D8153
[M]8154	Not used	-
[M]8155		-
[M]8156*4	Inverter communication in execution [ch2]	D8156
[M]8157*4	Inverter communication error [ch2]	D8157
[M]8158*4	Inverter communication error latch [ch2]	D8158
[M]8159	Not used	-

*4. Cleared when PLC switches from STOP to RUN.
Supported in Ver. 1.10 or later.

Number and name	Operation and function	Corresponding special device
Advanced Function		
M 8160	Not used	-
M 8161*1*2	8-bit process mode	-
M 8162	High speed parallel link mode	-
[M]8163	Not used	-
M 8164		-
M 8165		-
[M]8166		-
M 8167		-
M 8168*1	SMOV (FNC 13) instruction: HEX data handling function	-
[M]8169	Not used	-

*1. Cleared when PLC switches from STOP to RUN.
*2. Applicable to RS (FNC 80), ASCI (FNC 82), HEX (FNC 83), and CCD (FNC 84) instructions.

Pulse Catch		
M 8170*3	Input X000 pulse catch	-
M 8171*3	Input X001 pulse catch	-
M 8172*3	Input X002 pulse catch	-
M 8173*3	Input X003 pulse catch	-
M 8174*3	Input X004 pulse catch	-
M 8175*3	Input X005 pulse catch	-
M 8176	Not used	-
M 8177		-

*3. Cleared when PLC switches from STOP to RUN.

Communication Port Channel Setting		
M 8178	Parallel link channel switch (OFF: ch1/ON: ch2)	-
M 8179	N:N network channel switch*4	-

*4. The channel is specified by either creating or not creating M8179 in setting program.
- ch1: not creating M8179 in setting program
- ch2: creating M8179 in setting program

Number and name	Operation and function	Corresponding special device
N:N Network		
[M]8180	Not used	-
[M]8181		-
[M]8182		-
[M]8183	Data communication error (Master station)	D8201 to D8218
[M]8184	Data communication error (Slave station No.1)	
[M]8185	Data communication error (Slave station No.2)	
[M]8186	Data communication error (Slave station No.3)	
[M]8187	Data communication error (Slave station No.4)	
[M]8188	Data communication error (Slave station No.5)	
[M]8189	Data communication error (Slave station No.6)	
[M]8190	Data communication error (Slave station No.7)	
[M]8191	Data communication in execution	
[M]8192	Not used	-
[M]8193		-
[M]8194		-
[M]8195		-
[M]8196		-
[M]8197		-
M 8198		-
M 8199		-

Number and name		Operation and function	Corresponding special device
Counter Up/down Counter Counting Direction			
M 8200	C200	When M8□□□is ON, the corresponding C□□□ is changed to down mode. • ON: Down count operation • OFF: Up count operation	-
M 8201	C201		-
M 8202	C202		-
M 8203	C203		-
M 8204	C204		-
M 8205	C205		-
M 8206	C206		-
M 8207	C207		-
M 8208	C208		-
M 8209	C209		-
M 8210	C210		-
M 8211	C211		-
M 8212	C212		-
M 8213	C213		-
M 8214	C214		-
M 8215	C215		-
M 8216	C216		-
M 8217	C217		-
M 8218	C218		-
M 8219	C219		-
M 8220	C220		-
M 8221	C221		-
M 8222	C222		-
M 8223	C223		-
M 8224	C224		-
M 8225	C225		-
M 8226	C226		-
M 8227	C227		-
M 8228	C228		-
M 8229	C229		-
M 8230	C230		-
M 8231	C231		-
M 8232	C232		-
M 8233	C233		-
M 8234	C234		-
High Speed Counter Up/down Counter Counting Direction			
M 8235	C235	When M8□□□ is ON, the corresponding C□□□ is changed to down mode. • ON: Down count operation • OFF: Up count operation	-
M 8236	C236		-
M 8237	C237		-
M 8238	C238		-
M 8239	C239		-
M 8240	C240		-
M 8241	C241		-
M 8242	C242		-
M 8243	C243		-
M 8244	C244		-
M 8245	C245		-

Number and name		Operation and function	Corresponding special device
High Speed Counter Up/down Counter Monitoring			
[M]8246	C246	When C□□□ of 1-phase 2-input or 2-phase 2-input counter is in down mode, the corresponding M8□□□ turns ON. • OFF:Down count operation • ON:Up count operation	-
[M]8247	C247		-
[M]8248	C248		-
[M]8249	C249		-
[M]8250	C250		-
[M]8251	C251		-
[M]8252	C252		-
[M]8253	C253		-
[M]8254	C254		-
[M]8255	C255		-
[M]8256 to [M]8259		Not used	-
Analog Expansion Board (Refer to Appendix A-3 for details)			
M8260 to M8269*1		1st expansion board*2	-
M8270 to M8279*1		2nd expansion board*3	-
Analog Special Adapter (Refer to Appendix A-4 for details)			
M8280 to M8289		1st special adapter*4	-
M8290 to M8299		2nd special adapter*4	-

*1. Supported in Ver. 1.10 or later.
*2. 1st expansion board becomes an expansion board connected to BD connector of main units (14/24 point type), or BD1 connector of main units (40/60 point type).
*3. 2nd expansion board becomes an expansion board connected to BD2 connector of main units (40/60 point type).
*4. Connected analog special adapters are counted from the main unit side.

Flag		
[M]8312*5	Real time clock data lost error	-
[M]8313 to [M]8328	Not used	-
[M]8329	Instruction execution abnormal end	-

*5. Backed up against power interruption, and automatically cleared when M8312 itself is cleared or when the clock data is set again.

Number and name	Operation and function	Corresponding special device
Positioning		
[M]8330 to [M]8337	Not used	-
M 8338*1	PLSV (FNC157) instruction: Acceleration/deceleration operation	-
[M]8339	Not used	-
[M]8340	[Y000] Pulse output monitor (ON: BUSY/ OFF: READY)	-
M 8341*1	[Y000] Clear signal output function enable	-
M 8342*1	[Y000] Zero return direction specification	-
M 8343	[Y000] Forward limit	-
M 8344	[Y000] Reverse limit	-
M 8345*1	[Y000] DOG signal logic reverse	-
M 8346*1	[Y000] Zero point signal logic reverse	-
M 8347	Not used	-
[M]8348	[Y000] Positioning instruction activation	-
M 8349*1	[Y000] Pulse output stop command	-
[M]8350	[Y001] Pulse output monitor (ON: BUSY/ OFF: READY)	-
M 8351*1	[Y001] Clear signal output function enable	-
M 8352*1	[Y001] Zero return direction specification	-
M 8353	[Y001] Forward limit	-
M 8354	[Y001] Reverse limit	-
M 8355*1	[Y001] DOG signal logic reverse	-
M 8356*1	[Y001] Zero point signal logic reverse	-
M 8357	Not used	-
[M]8358	[Y001] Positioning instruction activation	-
M 8359*1	[Y001] Pulse output stop command	-
[M]8360	[Y002] Pulse output monitor (ON: BUSY/ OFF: READY)	-
M 8361*1	[Y002] Clear signal output function enable	-
M 8362*1	[Y002] Zero return direction specification	-
M 8363	[Y002] Forward limit	-
M 8364	[Y002] Reverse limit	-
M 8365*1	[Y002] DOG signal logic reverse	-
M 8366*1	[Y002] Zero point signal logic reverse	-
M 8367	Not used	-
[M]8368	[Y002] Positioning instruction activation	-
M 8369*1	[Y002] Pulse output stop command	-

*1. Cleared when PLC switches from RUN to STOP.

Number and name	Operation and function	Corresponding special device
RS2 (FNC 87) [ch0]		
[M]8370	Not used	-
M 8371*2	RS2 (FNC 87) [ch0] Send wait flag	-
M 8372*2	RS2 (FNC 87) [ch0] Send request	D8372
M 8373*2	RS2 (FNC 87) [ch0] Receive complete flag	D8373
[M]8374 to [M]8378	Not used	-
M 8379	RS2 (FNC 87) [ch0] Time-out check flag	-
High Speed Counter Function		
[M]8380 to [M]8387	Not used	-
[M]8388	Contact for high speed counter function change	-
M 8389 to M 8391	Not used	-
M 8392	Function changeover device for C248 and C253	-
[M]8393	Not used	-
[M]8394	Not used	-
[M]8395	Function changeover device for C254	-
[M]8396	Not used	-
[M]8397		-
Ring Counter		
M 8398	Ring counter operation (in units of 1ms, 32 bits)*3	D8398 D8399
[M]8399	Not used	-

*2. Cleared when PLC switches from RUN to STOP or when RS2 instruction [ch0] is OFF.

*3. 1ms ring counter (D8399, D8398) will operate after M8398 turns ON.

RS2 (FNC 87) [ch1]		
[M]8400	Not used	-
[M]8401*4	RS2 (FNC 87) [ch1] Send wait flag	-
M 8402*4	RS2 (FNC 87) [ch1] Send request	D8402
M 8403*4	RS2 (FNC 87) [ch1] Receive complete flag	D8403
[M]8404	RS2 (FNC 87) [ch1] Carrier detection flag	-
[M]8405	RS2 (FNC 87) [ch1] Data set ready (DSR) flag	-
[M]8406	Not used	-
[M]8407		-
[M]8408		-
M 8409	RS2 (FNC 87) [ch1] Time-out check flag	-

*4. Cleared when PLC switches from RUN to STOP or when RS2 instruction [ch1] is OFF.

Number and name	Operation and function	Corresponding special device
RS2 (FNC 87) [ch2] and Computer Link [ch2]		
[M]8410 to [M]8420	Not used	-
[M]8421*1	RS2 (FNC 87) [ch2] Send wait flag	-
M 8422*1	RS2 (FNC 87) [ch2] Send request	D8422
M 8423*1	RS2 (FNC 87) [ch2] Receive complete flag	D8423
[M]8424	RS2 (FNC 87) [ch2] Carrier detection flag	-
[M]8425	RS2 (FNC 87) [ch2] Data set ready (DSR) flag	-
[M]8426	Computer link [ch2] Global ON	D8427 D8428 D8429
[M]8427	Computer link [ch2] On-demand send processing	
M 8428	Computer link [ch2] On-demand error flag	
M 8429	Computer link [ch2] On-demand Word/Byte changeover RS2 (FNC 87) [ch2] Time-out check flag	

*1. Cleared when PLC switches from RUN to STOP or when RS2 instruction [ch2] is OFF.

Error Detection		
[M]8430 to [M]8437	Not used	-
M 8438*2	Serial communication error 2 [ch2]	D8438
[M]8439 to [M]8448	Not used	-
[M]8449	Special block error flag	D8449
[M]8450 to [M]8459	Not used	-
Positioning		
M 8460 to M8463	Not used	-
M 8464	DSZR (FNC150), ZRN (FNC156) instructions [Y000] Clear signal device specification function enabled	D8464
M 8465	DSZR (FNC150), ZRN (FNC156) instructions [Y001] Clear signal device specification function enabled	D8465
M 8466	DSZR (FNC150), ZRN (FNC156) instructions [Y002] Clear signal device specification function enabled	D8466
[M]8467 to [M]8511	Not used	-

*2. Cleared when PLC power supply from OFF to ON.

Appendix A-2 Special Data Register (D8000 to D8511)

Number and name	Content of register	Corresponding special device
PLC Status		
D 8000 Watchdog timer	Default value is 200ms (in 1ms steps) (Writes from system ROM at power ON) Value overwritten by program is valid after END or WDT instruction execution.	-
[D]8001 PLC type and system version	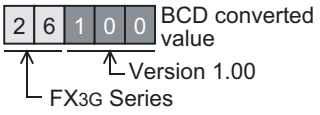	D8101
[D]8002 Memory capacity	• 2...2K steps • 4...4K steps • 8...8K steps • If 16K steps or more "K8" is written to D8002 and "16" or "32" is written to D8102.	M8002 D8102
[D]8003 Memory type	Stores the memory type (built-in EEPROM or memory cassette) and the PROTECT switch ON/OFF status of the memory cassette.*1	-
[D]8004 Error number M	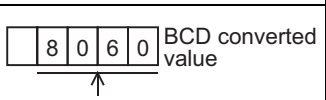	M8004
[D]8005 Battery voltage	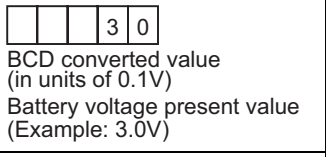	M8005
[D]8006 Low battery voltage detection level	Default: 2.7V (in units of 0.1V) (Writes from system ROM at power ON)	M8006
[D]8007	Not used	-
D 8008	Not used	-
[D]8009 24V DC failed device	Minimum input device number of input/output powered extension unit in which 24V DC has failed.	M8009

*1. D8003 becomes the undermentioned content.

Present value	Type of memory	Protect switch
02H	EEPROM memory cassette	OFF
0AH	EEPROM memory cassette	ON
10H	Built-in memory in PLC	-

Number and name	Content of register	Corresponding special device
Clock		
[D]8010 Present scan time*2	Accumulated instruction-execution time from 0 step (in units of 0.1ms)	-
[D]8011 Minimum scan time*2	Minimum value of scan time (in units of 0.1ms)	-
[D]8012 Maximum scan time*2	Maximum value of scan time (in units of 0.1ms)	-
D 8013 Second data	0 to 59 seconds (for real time clock)	-
D 8014 Minute data	0 to 59 minutes (for real time clock)	-
D 8015 Hour data	0 to 23 hours (for real time clock)	-
D 8016 Day data	1 to 31 days (for real time clock)	-
D 8017 Month data	1 to 12 months (for real time clock)	-
D 8018 Year data	2 digits of year data (0 to 99) (for real time clock)	-
D 8019 Day-of-the-week data	0 (Sunday) to 6 (Saturday) (for real time clock)	-

*2. Indicated value includes waiting time of constant scan operation (when M8039 is activated).

Input Filter		
D 8020 Input filter adjustment	Input filter value of X000 to X007 (Default: 10ms)	-
[D]8021	Not used	-
[D]8022		-
[D]8023		-
[D]8024		-
[D]8025		-
[D]8026		-
[D]8027		-
Index Register Z0 and V0		
[D]8028	Value of Z0 (Z) register*3	-
[D]8029	Value of V0 (V) register*3	-

*3. The values of Z1 to Z7 and V1 to V7 are stored in D8182 to D8195.

Number and name	Content of register	Corresponding special device
Analog Volume and Constant Scan		
[D]8030	Value of analog volume VR1 (Integer from 0 to 255)	-
[D]8031	Value of analog volume VR2 (Integer from 0 to 255)	-
[D]8032 to [D]8038	Not used	-
D 8039 Constant scan duration	Default: 0 ms (in 1 ms steps) (Writes from system ROM at power ON) Can be overwritten by program	M8039
Stepladder and Annunciator		
[D]8040*1 ON state number 1	The smallest number out of active state ranging from S0 to S899 and S1000 to S4095 is stored in D8040 and the second-smallest state number is stored in D8041. Active state numbers are then sequentially stored in registers up to D8047 (Max. 8 points).	M8047
[D]8041*1 ON state number 2		
[D]8042*1 ON state number 3		
[D]8043*1 ON state number 4		
[D]8044*1 ON state number 5		
[D]8045*1 ON state number 6		
[D]8046*1 ON state number 7		
[D]8047*1 ON state number 8		
[D]8048	Not used	-
[D]8049*1 On state minimum number	When M8049 is ON, the smallest number out of active annunciator relay ranging from S900 to S999 is stored in D8049.	M8049
D]8050 to [D]8059	Not used	-

*1. Executed at END instruction

Error Detection (Refer to Subsection 14.6.3 for details)		
[D]8060	If the unit or block corresponding to a programmed I/O number is not actually loaded, M8060 is set to ON and the first device number of the erroneous block is written to D8060. Example:If X020 is unconnected. 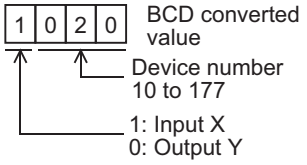	M8060
[D]8061	Error code for PLC hardware error	M8061
[D]8062	Error code for PC/PP communication error or serial communication error 0 [ch0]	M8062
[D]8063*2	Error code for serial communication error 1 [ch1]	M8063
[D]8064	Error code for parameter error	M8064
[D]8065	Error code for syntax error	M8065
[D]8066	Error code for ladder error	M8066
[D]8067*3	Error code for operation error	M8067

Number and name	Content of register	Corresponding special device
Error Detection (Refer to Subsection 14.6.3 for details)		
D 8068*2	Operation error step number latched	M8068
[D]8069*2	Error step number of M8065 to M8067	M8065 to M8067

*2. Cleared when PLC power supply from OFF to ON.
*3. Cleared when PLC switches from STOP to RUN.

Parallel Link		
[D]8070	Parallel link error time-out check time: 500ms	-
[D]8071 to [D]8073	Not used	-

Pulse width/Pulse period measurement function			
D 8074*4	Lower	[X000] Ring counter value for rising edge (1/6μs unit)	M8076 M8080
D 8075*4	Upper		
D 8076*4	Lower	[X000] Ring counter value for falling edge (1/6μs unit)	
D 8077*4	Upper		
D 8078*4	Lower	[X000] Pulse width/Pulse period (10μs unit)	
D 8079*4	Upper		
D 8080*4	Lower	[X001] Ring counter value for rising edge (1/6μs unit)	M8077 M8081
D 8081*4	Upper		
D 8082*4	Lower	[X001] Ring counter value for falling edge (1/6μs unit)	
D 8083*4	Upper		
D 8084*4	Lower	[X001] Pulse width/Pulse period (10μs unit)	
D 8085*4	Upper		
D 8086*4	Lower	[X003] Ring counter value for rising edge (1/6μs unit)	M8078 M8082
D 8087*4	Upper		
D 8088*4	Lower	[X003] Ring counter value for falling edge (1/6μs unit)	
D 8089*4	Upper		
D 8090*4	Lower	[X003] Pulse width/Pulse period (10μs unit)	
D 8091*4	Upper		
D 8092*4	Lower	[X004] Ring counter value for rising edge (1/6μs unit)	M8079 M8083
D 8093*4	Upper		
D 8094*4	Lower	[X004] Ring counter value for falling edge (1/6μs unit)	
D 8095*4	Upper		
D 8096*4	Lower	[X004] Pulse width/Pulse period (10μs unit)	
D 8097*4	Upper		

*4. Cleared when PLC switches from STOP to RUN. Supported in Ver. 1.10 or later.

Memory Information		
[D]8101 PLC type and system version	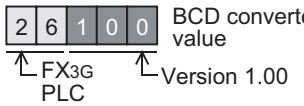	-
[D]8102	2.....2K steps 4.....4K steps 8.....8K steps 16....16K steps 32....32K steps	-
[D]8103 to [D]8107	Not used	-
[D]8108	Number of special function blocks connected	-

Number and name	Content of register	Corresponding special device
Output Refresh Error		
[D]8109	Y number where output refresh error occurs	M8109
[D]8110 to [D]8119	Not used	-
RS (FNC 80) and Computer Link [ch1]		
D 8120*1	RS (FNC 80) instruction and computer link [ch1] Communication format setting	-
D 8121*1	Computer link [ch1] Station number setting	-
[D]8122*2	RS (FNC 80) instruction: Remaining points of transmit data	M8122
[D]8123*2	RS (FNC 80) instruction: Monitoring receive data points	M8123
D 8124	RS (FNC 80) instruction: Header <Default: STX>	-
D 8125	RS (FNC 80) instruction: Terminator <Default: ETX>	-
[D]8126	Not used	-
D 8127	Computer link [ch1] Specification of on-demand head device register	M8126 to M8129
D 8128	Computer link [ch1] Specification of on-demand data length register	
D 8129*1	RS (FNC 80) instruction, computer link [ch1] Time-out time setting	

*1. Latch device
*2. Cleared when PLC switches from RUN to STOP.

Positioning			
[D]8130 to [D]8135	Not used		-
D 8136	Lower	PLSY (FNC 57), PLSR (FNC 59) instructions: Accumulated total number of pulses output to Y000 and Y001	-
D 8137	Upper		-
[D]8138	Not used		-
[D]8139			-
D 8140	Lower	Accumulated number of pulses output to Y000 for PLSY (FNC 57) and PLSR (FNC 59) instructions, or current address of Y000 for positioning instruction	-
D 8141	Upper		-
D 8142	Lower	Accumulated number of pulses output to Y001 for PLSY (FNC 57) and PLSR (FNC 59) instructions, or current address of Y001 for positioning instruction	-
D 8143	Upper		
[D]8144	Not used		-
D 8145			-
D 8146			-
D 8147			-
D 8148			-
[D]8149			-

Number and name	Content of register	Corresponding special device
Inverter Communication Function		
D 8150*4	Response wait time of inverter communication [ch1]	-
[D]8151*4	Step number of instruction during inverter communication [ch1] Default: -1	M8151
[D]8152*3*4	Error code for inverter communication [ch1]	M8152
[D]8153*4	Inverter communication error step number latched [ch1] Default: -1	M8153
[D]8154	Not used	-
D 8155*4	Response wait time of inverter communication [ch2]	-
[D]8156*4	Step number of instruction during inverter communication [ch2] Default: -1	M8156
[D]8157*3*4	Error code for inverter communication [ch2]	M8157
[D]8158*4	Inverter communication error step number latched [ch2] Default: -1	M8158
[D]8159	Not used	-

*3. Cleared when PLC switches from STOP to RUN.
*4. Supported in Ver. 1.10 or later.

Advanced Function		
[D]8160	Not used	-
[D]8161		-
[D]8162		-
[D]8163		-
D 8164		-
[D]8165		-
[D]8166		-
[D]8167		-
[D]8168		-
[D]8169	Access restriction status*5	-

*5. Access restriction status

Present value	Access restriction status	Program		Monitoring	Present value change
		Read	Write		
H**00*7	2nd keyword is not set	✓*6	✓*6	✓*6	✓*6
H**10*7	Write protection	✓	-	✓	✓
H**11*7	Read / write protection	-	-	✓	✓
H**12*7	All online operation protection	-	-	-	-
H**20*7	Keyword cancel	✓	✓	✓	✓

*6. Accesses are restricted by the keyword setting status.
*7. "**" indicates areas used by the system.

Number and name	Content of register	Corresponding special device
N:N Network (setting)		
[D]8170	Not used	-
[D]8171		-
[D]8172		-
[D]8173	Station number	-
[D]8174	Total number of slave stations	-
[D]8175	Refresh range	-
D 8176	Station number setting	M8038
D 8177	Total slave station number setting	
D 8178	Refresh range setting	
D 8179	Retry count setting	
D 8180	Comms time-out setting	
[D]8181	Not used	-
Index Register Z1 to Z7 and V1 to V7		
[D]8182	Value of Z1 register	-
[D]8183	Value of V1 register	-
[D]8184	Value of Z2 register	-
[D]8185	Value of V2 register	-
[D]8186	Value of Z3 register	-
[D]8187	Value of V3 register	-
[D]8188	Value of Z4 register	-
[D]8189	Value of V4 register	-
[D]8190	Value of Z5 register	-
[D]8191	Value of V5 register	-
[D]8192	Value of Z6 register	-
[D]8193	Value of V6 register	-
[D]8194	Value of Z7 register	-
[D]8195	Value of V7 register	-
[D]8196	Not used	-
[D]8197		-
[D]8198		-
[D]8199		-
N:N Network (monitoring)		
[D]8200	Not used	-
[D]8201	Current link scan time	-
[D]8202	Maximum link scan time	-
[D]8203	Number of communication error at master station	M8183 to M8191
[D]8204	Number of communication error at slave station No.1	
[D]8205	Number of communication error at slave station No.2	
[D]8206	Number of communication error at slave station No.3	
[D]8207	Number of communication error at slave station No.4	
[D]8208	Number of communication error at slave station No.5	
[D]8209	Number of communication error at slave station No.6	
[D]8210	Number of communication error at slave station No.7	
[D]8211	Code of communication error at master station	M8183 to M8191
[D]8212	Code of communication error at slave station No.1	
[D]8213	Code of communication error at slave station No.2	
[D]8214	Code of communication error at slave station No.3	
[D]8215	Code of communication error at slave station No.4	
[D]8216	Code of communication error at slave station No.5	
[D]8217	Code of communication error at slave station No.6	
[D]8218	Code of communication error at slave station No.7	
[D]8219 to [D]8259	Not used	
Analog Expansion Board (Refer to Appendix A-3 for details)		
D8260 to D8269*1	1st expansion board*2	-
D8270 to D8279*1	2nd expansion board*3	-
Analog Special Adapter (Refer to Appendix A-4 for details)		
D 8280 to D 8289	1st special adapter*4	-
D 8290 to D 8299	2nd special adapter*4	-

*1. Supported in Ver. 1.10 or later.
*2. 1st expansion board becomes an expansion board connected to BD connector of main units (14/24 point type), or BD1 connector of main units (40/60 point type).
*3. 2nd expansion board becomes an expansion board connected to BD2 connector of main units(40/60 point type).
*4. Connected analog special adapters are counted from the main unit side.

Display module		
D8300*1	Control device (D) for display module Default: K-1	-
D8301*1	Control device (M) for display module Default: K-1	-
D 8302*1*2	Language display setting • Japanese: K0 • English: Other than K0	-
D 8303*1	LCD contrast setting value • Default: K0	-

*1. Supported in Ver. 1.10 or later.
*2. Latch device

Number and name	Content of register		Corresponding special device
Positioning			
[D]8329 to [D]8339	Not used		-
D 8340	Lower	Y000] Current value register Default: 0	-
D 8341	Upper		
D 8342	[Y000] Bias speed Default: 0		-
D 8343	Lower	[Y000] Maximum speed Default: 100000	-
D 8344	Upper		
D 8345	[Y000] Creep speed Default: 1000		-
D 8346	Lower	[Y000] Zero return speed Default: 50000	-
D 8347	Upper		
D 8348	[Y000] Acceleration time Default: 100		-
D 8349	[Y000] Deceleration time Default: 100		-
D 8350	Lower	[Y001] Current value register Default: 0	-
D 8351	Upper		
D 8352	[Y001] Bias speed Default: 0		-
D 8353	Lower	[Y001] Maximum speed Default: 100000	-
D 8354	Upper		
D 8355	[Y001] Creep speed Default: 1000		-
D 8356	Lower	[Y001] Zero return speed Default: 50000	-
D 8357	Upper		
D 8358	[Y001] Acceleration time Default: 100		-
D 8359	[Y001] Deceleration time Default: 100		-
D 8360	Lower	[Y002] Current value register Default: 0	-
D 8361	Upper		
D 8362	[Y002] Bias speed Default: 0		-
D 8363	Lower	[Y002] Maximum speed Default: 100000	-
D 8364	Upper		
D 8365	[Y002] Creep speed Default: 1000		-
D 8366	Lower	[Y002] Zero return speed Default: 50000	-
D 8367	Upper		
D 8368	[Y002] Acceleration time Default: 100		-
D 8369	[Y002] Deceleration time Default: 100		-
RS2 (FNC 87) [ch0]			
D 8370	RS2 (FNC 87) [ch0] Communication format setting		-
[D]8371	Not used		-
[D]8372*1	RS2 (FNC 87) [ch0] Remaining points of transmit data		M8372
[D]8373*1	RS2 (FNC 87) [ch0] Monitoring receive data points		M8373
[D]8374	Not used		-
[D]8375	Communication parameter display [ch0]		-
[D]8376	Not used		-
[D]8377			-
[D]8378			-

Number and name	Content of register		Corresponding special device
[D]8379	RS2 (FNC 87) [ch0] Time-out time setting		-
D 8380	RS2 (FNC 87) [ch0] Header 1 and 2 <Default: STX>		-
D 8381	RS2 (FNC 87) [ch0] Header 3 and 4		-
D 8382	RS2 (FNC 87) [ch0] Terminator 1 and 2 <Default: ETX>		-
D 8383	RS2 (FNC 87) [ch0] Terminator 3 and 4		-
[D]8384	RS2 (FNC 87) [ch0] Receive sum (received data)		-
[D]8385	RS2 (FNC 87) [ch0] Receive sum (calculated result)		-
[D]8386	RS2 (FNC 87) [ch0] Receive sum (calculated result)		-
[D]8387	Not used		-
[D]8388			-
[D]8389	Operation mode display [ch0]		-
Ring Counter			
D 8398	Lower	Up-operation ring counter of 0 to 2,147,483,647 (in units of 1ms, 32-bit)*2	M8398
D 8399	Upper		
RS2 (FNC 87) [ch1]			
D 8400	RS2 (FNC 87) [ch1] Communication format setting		-
[D]8401	Not used		-
[D]8402*1	RS2 (FNC 87) [ch1] Remaining points of transmit data		M8402
[D]8403*1	RS2 (FNC 87) [ch1] Monitoring receive data points		M8403
[D]8404	Not used		-
[D]8405	Communication parameter display [ch1]		-
[D]8406	Not used		-
[D]8407			-
[D]8408			-
D 8409	RS2 (FNC 87) [ch1] Time-out time setting		-
D 8410	RS2 (FNC 87) [ch1] Header 1 and 2 <Default: STX>		-
D 8411	RS2 (FNC 87) [ch1] Header 3 and 4		-
D 8412	RS2 (FNC 87) [ch1] Terminator 1 and 2 <Default: ETX>		-
D 8413	RS2 (FNC 87) [ch1] Terminator 3 and 4		-
[D]8414	RS2 (FNC 87) [ch1] Receive sum (received data)		-
[D]8415	RS2 (FNC 87) [ch1] Receive sum (calculated result)		-
[D]8416	RS2 (FNC 87) [ch1] Send sum		-
[D]8417 to [D]8418	Not used		-
[D]8419	Operation mode display [ch1]		-

*1. Cleared when PLC switches from RUN to STOP.
*2. 1ms ring counter (D8399, D8398) will operate after M8398 turns ON.

Number and name	Content of register	Corresponding special device
RS2 (FNC 87) [ch2] and Computer Link [ch2]		
D 8420	RS2 (FNC 87) [ch2] Communication format setting	-
D 8421	Computer link [ch2] Station number setting	-
[D]8422*1	RS2 (FNC 87) [ch2] Remaining points of transmit data	M8422
[D]8423*1	RS2 (FNC 87) [ch2] Monitoring receive data points	M8423
[D]8424	Not used	-
[D]8425	Communication parameter display [ch2]	-
[D]8426	Not used	-
D 8427	Computer link [ch2] Specification of on-demand head device register	M8426 to M8429
D 8428	Computer link [ch2] Specification of on-demand data length register	
D 8429	RS2 (FNC 87) [ch2], computer link [ch2] Time-out time setting	
D 8430	RS2 (FNC 87) [ch2] Header 1 and 2 <Default: STX>	-
D 8431	RS2 (FNC 87) [ch2] Header 3 and 4	-
D 8432	RS2 (FNC 87) [ch2] Terminator 1 and 2 <Default: ETX>	-
D 8433	RS2 (FNC 87) [ch2] Terminator 3 and 4	-
[D]8434	RS2 (FNC 87) [ch2] Receive sum (received data)	-
[D]8435	RS2 (FNC 87) [ch2] Receive sum (calculated result)	-
[D]8436	RS2 (FNC 87) [ch2] Send sum	-
[D]8437	Not used	-

*1. Cleared when PLC switches from RUN to STOP.

Number and name	Content of register	Corresponding special device
Error Detection		
[D]8438*2	Error code for serial communication error 2 [ch2]	M8438
RS2 (FNC 87) [ch2] and Computer Link [ch2]		
[D]8439	Operation mode display [ch2]	-
Error Detection		
[D]8440 to [D]8448	Not used	-
[D]8449	Special block error code	M8449
[D]8450 to [D]8459	Not used	-
Positioning		
[D]8460 to [D]8463	Not used	-
D 8464	DSZR (FNC150) and ZRN (FNC156) instructions: [Y000] Clear signal device specification	M8464
D 8465	DSZR (FNC150) and ZRN (FNC156) instructions: [Y001] Clear signal device specification	M8465
D 8466	DSZR (FNC150) and ZRN (FNC156) instructions: [Y002] Clear signal device specification	M8466
D 8467 to [D]8511	Not used	-

*2. Cleared when PLC power supply from OFF to ON.

Appendix A-3 Analog expansion boards[M8260 to M8279 and D8260 to D8279]

When analog expansion boards are connected, operations and functions are assigned to the devices shown in the tables below in accordance with the position of connected analog special adapters.
Devices which cannot be written are shaded in "Operation and function" column.

→ **For details, refer to the Analog Control Edition.**

Appendix A-3-1 Special auxiliary relays (M8260 to M8279)

Number	Operation and function	
	FX3G-2AD-BD	FX3G-1DA-BD
Compatible Versions	Ver.1.10 or later	Ver.1.10 or later
1st expansion board		
M 8260	Input mode switching Ch1	Output mode switching
M 8261	Input mode switching Ch2	Not used
M 8262	Not used	Not used
M 8263	Not used	Not used
M 8264	Not used	Output hold mode
M 8265	Not used	Not used
M 8266	Not used	Not used
M 8267	Not used	Not used
M 8268	Not used	Not used
M 8269	Not used	Not used
2nd expansion board		
M 8270	Input mode switching Ch1	Output mode switching
M 8271	Input mode switching Ch2	Not used
M 8272	Not used	Not used
M 8273	Not used	Not used
M 8274	Not used	Output hold mode
M 8275	Not used	Not used
M 8276	Not used	Not used
M 8277	Not used	Not used
M 8278	Not used	Not used
M 8279	Not used	Not used

Appendix A-3-2 Special data registers (D8260 to D8279)

Number	Operation and function	
	FX3G-2AD-BD	FX3G-1DA-BD
Compatible Versions	Ver.1.10 or later	Ver.1.10 or later
1st analog expansion board		
D 8260	Input data Ch1	Output data
D 8261	Input data Ch2	Not used
D 8262	Not used	Not used
D 8263	Not used	Not used
D 8264	Averaging time for Ch1 (1 to 4095)	Not used
D 8265	Averaging time for Ch2 (1 to 4095)	Not used
D 8266	Not used	Not used
D 8267	Not used	Not used
D 8268	Error status	Error status
D 8269	Model code: 3	Model code: 4
2nd analog expansion board		
D 8270	Input data Ch1	Output data
D 8271	Input data Ch2	Not used
D 8272	Not used	Not used
D 8273	Not used	Not used
D 8274	Averaging time for Ch1 (1 to 4095)	Not used
D 8275	Averaging time for Ch2 (1 to 4095)	Not used
D 8276	Not used	Not used
D 8277	Not used	Not used
D 8278	Error status	Error status
D 8279	Model code: 3	Model code: 4

Appendix A-4 Analog special adapters[M8280 to M8299 and D8280 to D8299]

When analog special adapters are connected, operations and functions are assigned to the devices shown in the tables below in accordance with the number of connected analog special adapters.
Devices which cannot be written are shaded in "Operation and function" column.

→ **For details, refer to the Analog Control Edition.**

Appendix A-4-1 Special auxiliary relays (M8280 to M8299)

Number	Operation and function			
	FX3U-4AD-ADP	FX3U-4DA-ADP	FX3U-4AD-PT(W)-ADP	FX3U-4AD-TC-ADP
1st analog special adapter				
M 8280	Input mode switching Ch1	Output mode switching Ch1	Temperature unit selection	Temperature unit selection
M 8281	Input mode switching Ch2	Output mode switching Ch2	Not used	Type-K/-J switching
M 8282	Input mode switching Ch3	Output mode switching Ch3	Not used	Not used
M 8283	Input mode switching Ch4	Output mode switching Ch4	Not used	Not used
M 8284	Not used	Output hold mode cancel Ch1	Not used	Not used
M 8285	Not used	Output hold mode cancel Ch2	Not used	Not used
M 8286	Not used	Output hold mode cancel Ch3	Not used	Not used
M 8287	Not used	Output hold mode cancel Ch4	Not used	Not used
M 8288	Not used	Not used	Not used	Not used
M 8289	Not used	Not used	Not used	Not used
2nd analog special adapter				
M 8290	Input mode switching Ch1	Output mode switching Ch1	Temperature unit selection	Temperature unit selection
M 8291	Input mode switching Ch2	Output mode switching Ch2	Not used	Type-K/-J switching
M 8292	Input mode switching Ch3	Output mode switching Ch3	Not used	Not used
M 8293	Input mode switching Ch4	Output mode switching Ch4	Not used	Not used
M 8294	Not used	Output hold mode cancel Ch1	Not used	Not used
M 8295	Not used	Output hold mode cancel Ch2	Not used	Not used
M 8296	Not used	Output hold mode cancel Ch3	Not used	Not used
M 8297	Not used	Output hold mode cancel Ch4	Not used	Not used
M 8298	Not used	Not used	Not used	Not used
M 8299	Not used	Not used	Not used	Not used

Number	Operation and function
	FX3U-4AD-PNK-ADP
1st analog special adapter	
M 8280	Temperature unit selection
M 8281	Input sensor selection
M 8282	Not used
M 8283	Not used
M 8284	Not used
M 8285	Not used
M 8286	Not used
M 8287	Not used
M 8288	Not used
M 8289	Not used
2nd analog special adapter	
M 8290	Temperature unit selection
M 8291	Input sensor selection
M 8292	Not used
M 8293	Not used
M 8294	Not used
M 8295	Not used
M 8296	Not used
M 8297	Not used
M 8298	Not used
M 8299	Not used

Appendix A-4-2 Special data registers (D8280 to D8299)

Number	Operation and function			
	FX3U-4AD-ADP	FX3U-4DA-ADP	FX3U-4AD-PT(W)-ADP	FX3U-4AD-TC-ADP
1st analog special adapter				
D 8280	Input data Ch1	Output data Ch1	Ch1 temperature measurement data	Ch1 temperature measurement data
D 8281	Input data Ch2	Output data Ch2	Ch2 temperature measurement data	Ch2 temperature measurement data
D 8282	Input data Ch3	Output data Ch3	Ch3 temperature measurement data	Ch3 temperature measurement data
D 8283	Input data Ch4	Output data Ch4	Ch4 temperature measurement data	Ch4 temperature measurement data
D 8284	Averaging time for Ch1 (1 to 4095)	Not used	Averaging time for Ch1 (1 to 4095)	Averaging time for Ch1 (1 to 4095)
D 8285	Averaging time for Ch2 (1 to 4095)	Not used	Averaging time for Ch2 (1 to 4095)	Averaging time for Ch2 (1 to 4095)
D 8286	Averaging time for Ch3 (1 to 4095)	Not used	Averaging time for Ch3 (1 to 4095)	Averaging time for Ch3 (1 to 4095)
D 8287	Averaging time for Ch4 (1 to 4095)	Not used	Averaging time for Ch4 (1 to 4095)	Averaging time for Ch4 (1 to 4095)
D 8288	Error status	Error status	Error status	Error status
D 8289	Model code: 1	Model code: 2	Model code: PT: 20 PTW: 21	Model code: 10
2nd analog special adapter				
D 8290	Input data Ch1	Output data Ch1	Ch1 temperature measurement data	Ch1 temperature measurement data
D 8291	Input data Ch2	Output data Ch2	Ch2 temperature measurement data	Ch2 temperature measurement data
D 8292	Input data Ch3	Output data Ch3	Ch3 temperature measurement data	Ch3 temperature measurement data
D 8293	Input data Ch4	Output data Ch4	Ch4 temperature measurement data	Ch4 temperature measurement data
D 8294	Averaging time for Ch1 (1 to 4095)	Not used	Averaging time for Ch1 (1 to 4095)	Averaging time for Ch1 (1 to 4095)
D 8295	Averaging time for Ch2 (1 to 4095)	Not used	Averaging time for Ch2 (1 to 4095)	Averaging time for Ch2 (1 to 4095)
D 8296	Averaging time for Ch3 (1 to 4095	Not used	Averaging time for Ch3 (1 to 4095)	Averaging time for Ch3 (1 to 4095)
D 8297	Averaging time for Ch4 (1 to 4095)	Not used	Averaging time for Ch4 (1 to 4095)	Averaging time for Ch4 (1 to 4095)
D 8298	Error status	Error status	Error status	Error status
D 8299	Model code: 1	Model code: 2	Model code: PT: 20 PTW: 21	Model code: 10

Number	Operation and function
	FX3U-4AD-PNK-ADP
1st analog special adapter	
D 8280	Ch1 temperature measurement data
D 8281	Ch2 temperature measurement data
D 8282	Ch3 temperature measurement data
D 8283	Ch4 temperature measurement data
D 8284	Averaging time for Ch1 (1 to 4095)
D 8285	Averaging time for Ch2 (1 to 4095)
D 8286	Averaging time for Ch3 (1 to 4095)
D 8287	Averaging time for Ch4 (1 to 4095)
D 8288	Error status
D 8289	Model code: K11
2nd analog special adapter	
D 8290	Ch1 temperature measurement data
D 8291	Ch2 temperature measurement data
D 8292	Ch3 temperature measurement data
D 8293	Ch4 temperature measurement data
D 8294	Averaging time for Ch1 (1 to 4095)
D 8295	Averaging time for Ch2 (1 to 4095)
D 8296	Averaging time for Ch3 (1 to 4095)
D 8297	Averaging time for Ch4 (1 to 4095)
D 8298	Error status
D 8299	Model code: K11

Appendix B: Instruction List

Appendix B-1 Basic Instructions

Mnemonic	Function
Contact Instruction	
LD	Initial logical operation contact type NO (normally open)
LDI	Initial logical operation contact type NC (normally closed)
LDP	Initial logical operation of Rising edge pulse
LDF	Initial logical operation of Falling/trailing edge pulse
AND	Serial connection of NO (normally open) contacts
ANI	Serial connection of NC (normally closed) contacts
ANDP	Serial connection of Rising edge pulse
ANDF	Serial connection of Falling/trailing edge pulse
OR	Parallel connection of NO (normally open) contacts
ORI	Parallel connection of NC (normally closed) contacts
ORP	Parallel connection of Rising edge pulse
ORF	Parallel connection of Falling/trailing edge pulse
Connection Instruction	
ANB	Serial connection of multiple parallel circuits
ORB	Parallel connection of multiple contact circuits
MPS	Stores the current result of the internal PLC operations
MRD	Reads the current result of the internal PLC operations
MPP	Pops (recalls and removes) the currently stored result
INV	Invert the current result of the internal PLC operations
MEP	Conversion of operation result to leading edge pulse
MEF	Conversion of operation result to trailing edge pulse

Mnemonic	Function
Out Instruction	
OUT	Final logical operation type coil drive
SET	SET Bit device latch ON
RST	RESET Bit device OFF
PLS	Rising edge pulse
PLF	Falling/trailing edge pulse
Master Control Instruction	
MC	Denotes the start of a master control block
MCR	Denotes the end of a master control block
Other Instruction	
NOP	No operation or null step
End Instruction	
END	Program END, I/O refresh and Return to Step 0

Appendix B-2 Step Ladder Instructions

Mnemonic	Function
STL	Starts step ladder
RET	Completes step ladder

Appendix B-3 Applied Instructions ... in Ascending Order of FNC Number

FNC No.	Mnemonic	Function
Program Flow		
00	CJ	Conditional Jump
01	CALL	Call Subroutine
02	SRET	Subroutine Return
03	IRET	Interrupt Return
04	EI	Enable Interrupt
05	DI	Disable Interrupt
06	FEND	Main Routine Program End
07	WDT	Watchdog Timer Refresh
08	FOR	Start a FOR/NEXT Loop
09	NEXT	End a FOR/NEXT Loop
Move and Compare		
10	CMP	Compare
11	ZCP	Zone Compare
12	MOV	Move
13	SMOV	Shift Move
14	CML	Complement
15	BMOV	Block Move
16	FMOV	Fill Move
17	-	
18	BCD	Conversion to Binary Coded Decimal
19	BIN	Conversion to Binary
Arithmetic and Logical Operation		
20	ADD	Addition
21	SUB	Subtraction
22	MUL	Multiplication
23	DIV	Division
24	INC	Increment
25	DEC	Decrement
26	WAND	Logical Word AND
27	WOR	Logical Word OR
28	WXOR	Logical Exclusive OR
29	-	
Rotation and Shift Operation		
30	ROR	Rotation Right
31	ROL	Rotation Left
32	-	
33	-	
34	SFTR	Bit Shift Right
35	SFTL	Bit Shift Left
36	WSFR	Word Shift Right
37	WSFL	Word Shift Left
38	SFWR	Shift Write [FIFO/FILO Control]
39	SFRD	Shift Read [FIFO Control]

FNC No.	Mnemonic	Function
Data Operation		
40	ZRST	Zone Reset
41	DECO	Decode
42	ENCO	Encode
43	SUM	Sum of Active Bits
44	BON	Check Specified Bit Status
45	MEAN	Mean
46	ANS	Timed Annunciator Set
47	ANR	Annunciator Reset
48	-	
49	FLT	Conversion to Floating Point*1
High Speed Processing		
50	REF	Refresh
51	-	
52	MTR	Input Matrix
53	HSCS	High Speed Counter Set
54	HSCR	High Speed Counter Reset
55	HSZ	High Speed Counter Zone Compare
56	SPD	Speed Detection
57	PLSY	Pulse Y Output
58	PWM	Pulse Width Modulation
59	PLSR	Acceleration/Deceleration Setup
Handy Instruction		
60	IST	Initial State
61	SER	Search a Data Stack
62	ABSD	Absolute Drum Sequencer
63	INCD	Incremental Drum Sequencer
64	-	
65	-	
66	ALT	Alternate State
67	RAMP	Ramp Variable Value
68	-	
69	-	
External FX I/O Device		
70	-	
71	-	
72	DSW	Digital Switch (Thumbwheel Input)
73	-	
74	SEGL	Seven Segment With Latch
75	-	
76	-	
77	-	
78	FROM	Read From A Special Function Block
79	TO	Write To A Special Function Block

FNC No.	Mnemonic	Function
External FX Device		
80	RS	Serial Communication
81	PRUN	Parallel Run (Octal Mode)
82	ASCI	Hexadecimal to ASCII Conversion
83	HEX	ASCII to Hexadecimal Conversion
84	CCD	Check Code
85	VRRD	Volume read*1
86	VRSC	Volume scale*1
87	RS2	Serial Communication 2
88	PID	PID Control Loop
89	-	
Floating Point		
110	ECMP	Floating Point Compare*1
111	-	
112	EMOV	Floating Point Move*1
113 to 119	-	
120	EADD	Floating Point Addition*1
121	ESUB	Floating Point Subtraction*1
122	EMUL	Floating Point Multiplication*1
123	EDIV	Floating Point Division*1
124	-	
125	-	
126	-	
127	ESQR	Floating Point Square Root*1
128	-	
129	INT	Floating Point to Integer Conversion*1
Positioning Control		
150	DSZR	DOG Search Zero Return
151	-	
152	TBL	Batch Data Positioning Mode
153	-	
154	-	
155	ABS	Absolute Current Value Read
156	ZRN	Zero Return
157	PLSV	Variable Speed Pulse Output
158	DRVI	Drive to Increment
159	DRVA	Drive to Absolute
Real Time Clock Control		
160	TCMP	RTC Data Compare
161	TZCP	RTC Data Zone Compare
162	TADD	RTC Data Addition
163	TSUB	RTC Data Subtraction
164	-	
165	-	
166	TRD	Read RTC data
167	TWR	Set RTC data
168	-	
169	HOUR	Hour Meter

FNC No.	Mnemonic	Function
External Device		
170	GRY	Decimal to Gray Code Conversion
171	GBIN	Gray Code to Decimal Conversion
172	-	
173	-	
174	-	
175	-	
176	RD3A	Read from Dedicated Analog Block
177	WR3A	Write to Dedicated Analog Block
178	-	
179	-	
Data Comparison		
220 to 223	-	
224	LD=	Load Compare (S1)=(S2)
225	LD>	Load Compare (S1)>(S2)
226	LD<	Load Compare (S1)<(S2)
227	-	
228	LD<>	Load Compare (S1)≠(S2)
229	LD<=	Load Compare (S1)≤(S2)
230	LD>=	Load Compare (S1)≥(S2)
231	-	
232	AND=	AND Compare (S1)=(S2)
233	AND>	AND Compare (S1)>(S2)
234	AND<	AND Compare (S1)<(S2)
235	-	
236	AND<>	AND Compare (S1)≠(S2)
237	AND<=	AND Compare (S1)≤(S2)
238	AND>=	AND Compare (S1)≥(S2)
239	-	
240	OR=	OR Compare (S1)=(S2)
241	OR>	OR Compare (S1)>(S2)
242	OR<	OR Compare (S1)<(S2)
243	-	
244	OR<>	OR Compare (S1)≠(S2)
245	OR<=	OR Compare (S1)≤(S2)
246	OR>=	OR Compare (S1)≥(S2)
247	-	
248	-	
249	-	
External Device Communication (Inverter Communication)		
270	IVCK	Inverter Status Check*1
271	IVDR	Inverter Drive*1
272	IVRD	Inverter Parameter Read*1
273	IVWR	Inverter Parameter Write*1

FNC No.	Mnemonic	Function
Extension File Register Control		
290	LOADR	Load From ER
291	-	
292	-	
293	-	
294	RWER	Rewrite to ER
295	-	
296	-	
297	-	
298	-	
299	-	

*1. Supported in Ver. 1.10 or later

MEMO

rr nt

Please con irm t e ollowing product warranty details be ore using t is product.

1. r tis rr nt erm n r tis rr nt R nge

I any aults or de ects (ereina ter Failure) ound to be t e responsibility o Mitsubis i occurs during use o t e product wit in t e gratis warranty term, t e product s all be repaired at no cost via t e sales representative or Mitsubis i Service Company. However, i repairs are re uired onsite at domestic or overseas location, expenses to send an engineer will be solely at t e customer's discretion. Mitsubis i s all not be eld responsible or any re-commissioning, maintenance, or testing on-site t at involves replacement o t e ailed module.

r tis rr nt erm

e gratis warranty term o t e product s all be or one year a ter t e date o purc ase or delivery to a designated place. ote t at a ter manu acture and s ipment rom Mitsubis i, t e maximum distribution period s all be six (6) mont s, and t e longest gratis warranty term a ter manu acturing s all be eig teen (18) mont s. e gratis warranty term o repair parts s all not exceed t e gratis warranty term be ore repairs.

r tis rr nt R nge

1) e range s all be limited to normal use wit in t e usage state, usage met ods and usage environment, etc., w ic ollow t e conditions and precautions, etc., given in t e instruction manual, user's manual and caution labels on t e product.
2) Even wit in t e gratis warranty term, repairs s all be c arged or in t e ollowing cases.
   a) Failure occurring rom inappropriate storage or andling, carelessness or negligence by t e user. Failure caused by t e user's ardware or so tware design.
   b) Failure caused by unapproved modi ications, etc., to t e product by t e user.
   c) W en t e Mitsubis i product is assembled into a user's device, Failure t at could ave been avoided i unctions or structures, udged as necessary in t e legal sa ety measures t e user's device is sub ect to or as necessary by industry standards, ad been provided.
   d) Failure t at could ave been avoided i consumable parts (battery, bac lig t, use, etc.) designated in t e instruction manual ad been correctly serviced or replaced.
   e) Relay ailure or output contact ailure caused by usage beyond t e speci ied Li e o contact (cycles).
) Failure caused by external irresistible orces suc as ires or abnormal voltages, and ailure caused by orce ma eure suc as eart ua es, lig tning, wind and water damage.
   g) Failure caused by reasons unpredictable by scienti ic tec nology standards at time o s ipment rom Mitsubis i.
) Any ot er ailure ound not to be t e responsibility o Mitsubis i or t at admitted not to be so by t e user.

2. Onerous re ir term ter iscontinu tion o ro uction

1) Mitsubis i s all accept onerous product repairs or seven (7) years a ter production o t e product is discontinued.
   Discontinuation o production s all be noti ied wit Mitsubis i ec nical Bulletins, etc.
2) Product supply (including repair parts) is not available a ter production is discontinued.

3. O erse s ser ice

Overseas, repairs s all be accepted by Mitsubis i's local overseas FA Center. ote t at t e repair conditions at eac FA Center may di er.

. Exclusion o loss in o ortunit n secon r loss rom rr nt li ilit

Regardless o t e gratis warranty term, Mitsubis i s all not be liable or compensation o damages caused by any cause ound not to be t e responsibility o Mitsubis i, loss in opportunity, lost pro its incurred to t e user or t ird person by Failures o Mitsubis i products, special damages and secondary damages w et er oreseeable or not , compensation or accidents, and compensation or damages to products ot er t an Mitsubis i products, replacement by t e user, maintenance o on-site e uipment, start-up test run and ot er tas s.

. C nges in ro uct s eci ic tions

e speci ications given in t e catalogs, manuals or tec nical documents are sub ect to c ange wit out prior notice.

. ro uct lic tion

1) In using t e Mitsubis i MELSEC programmable logic controller, t e usage conditions s all be t at t e application will not lead to a ma or accident even i any problem or ault s ould occur in t e programmable logic controller device, and t at bac up and ail-sa e unctions are systematically provided outside o t e device or any problem or ault.
2) e Mitsubis i programmable logic controller as been designed and manu actured or applications in general industries, etc. us, applications in w ic t e public could be a ected suc as in nuclear power plants and ot er power plants operated by respective power companies, and applications in w ic a special uality assurance system is re uired, suc as or Railway companies or Public service purposes s all be excluded rom t e programmable logic controller applications.
   In addition, applications in w ic uman li e or property t at could be greatly a ected, suc as in aircra t, medical applications, incineration and uel devices, manned transportation, e uipment or recreation and amusement, and sa ety devices, s all also be excluded rom t e programmable logic controller range o applications.
   However, in certain cases, some applications may be possible, providing t e user consults t eir local Mitsubis i representative outlining t e special re uirements o t e pro ect, and providing t at all parties concerned agree to t e special circumstances, solely at t e users discretion.

Re ise istor

te	Re ision	escri tion
11 2008	A	First Edition

USER'S MANUAL - Hardware Edition

FX3G SERIES PROGRAMMABLE CONTROLLERS

MITSUBISHI ELECTRIC CORPORATION
HEAD OFFICE: TOKYO BUILDING, 2-7-3 MARUNOUCHI, CHIYODA-KU, TOKYO 100-8310, JAPAN
HIMEJI WORKS: 840, CHIYODA CHO, HIMEJI, JAPAN

MODEL	FX3G-HW-E
MODEL CODE	09R521

JY997D31301A
(MEE)

Effective November 2008
Specifications are subject to change without notice.

HEADQUARTERS

MITSUBISHI ELECTRIC EUROPE B.V. **EUROPE**
German Branch
Gothaer Straße 8
D-40880 Ratingen
Phone: +49 (0)2102 / 486-0
Fax: +49 (0)2102 / 486-1120

MITSUBISHI ELECTRIC EUROPE B.V. **CZECH REPUBLIC**
Czech Branch
Avenir Business Park, Radlická 714/113a
CZ-158 00 Praha 5
Phone: +420 (0)251 551 470
Fax: +420 (0)251-551-471

MITSUBISHI ELECTRIC EUROPE B.V. **FRANCE**
French Branch
25, Boulevard des Bouvets
F-92741 Nanterre Cedex
Phone: +33 (0)1 / 55 68 55 68
Fax: +33 (0)1 / 55 68 57 57

MITSUBISHI ELECTRIC EUROPE B.V. **IRELAND**
Irish Branch
Westgate Business Park, Ballymount
IRL-Dublin 24
Phone: +353 (0)1 4198800
Fax: +353 (0)1 4198890

MITSUBISHI ELECTRIC EUROPE B.V. **ITALY**
Italian Branch
Viale Colleoni 7
I-20041 Agrate Brianza (MI)
Phone: +39 039 / 60 53 1
Fax: +39 039 / 60 53 312

MITSUBISHI ELECTRIC EUROPE B.V. **SPAIN**
Spanish Branch
Carretera de Rubí 76-80
E-08190 Sant Cugat del Vallés (Barcelona)
Phone: 902 131121 // +34 935653131
Fax: +34 935891579

MITSUBISHI ELECTRIC EUROPE B.V. **UK**
UK Branch
Travellers Lane
UK-Hatfield, Herts. AL10 8XB
Phone: +44 (0)1707 / 27 61 00
Fax: +44 (0)1707 / 27 86 95

MITSUBISHI ELECTRIC CORPORATION **JAPAN**
Office Tower "Z" 14 F
8-12,1 chome, Harumi Chuo-Ku
Tokyo 104-6212
Phone: +81 3 622 160 60
Fax: +81 3 622 160 75

MITSUBISHI ELECTRIC AUTOMATION, Inc. **USA**
500 Corporate Woods Parkway
Vernon Hills, IL 60061
Phone: +1 847 478 21 00
Fax: +1 847 478 22 53

EUROPEAN REPRESENTATIVES

GEVA **AUSTRIA**
Wiener Straße 89
AT-2500 Baden
Phone: +43 (0)2252 / 85 55 20
Fax: +43 (0)2252 / 488 60

TEHNIKON **BELARUS**
Oktyabrskaya 16/5, Off. 703-711
BY-220030 Minsk
Phone: +375 (0)17 / 210 46 26
Fax: +375 (0)17 / 210 46 26

Koning & Hartman b.v. **BELGIUM**
Woluwelaan 31
BE-1800 Vilvoorde
Phone: +32 (0)2 / 257 02 40
Fax: +32 (0)2 / 257 02 49

INEA BH d.o.o. **BOSNIA AND HERZEGOVINA**
Aleja Lipa 56
BA-71000 Sarajevo
Phone: +387 (0)33 / 921 164
Fax: +387 (0)33/ 524 539

AKHNATON **BULGARIA**
4 Andrej Ljapchev Blvd. Pb 21
BG-1756 Sofia
Phone: +359 (0)2 / 817 6004
Fax: +359 (0)2 / 97 44 06 1

INEA CR d.o.o. **CROATIA**
Losinjska 4 a
HR-10000 Zagreb
Phone: +385 (0)1 / 36 940 - 01/ -02/ -03
Fax: +385 (0)1 / 36 940 - 03

AutoCont C.S. s.r.o. **CZECH REPUBLIC**
Technologická 374/6
CZ-708 00 Ostrava-Pustkovec
Phone: +420 595 691 150
Fax: +420 595 691 199

B:TECH A.S. **CZECH REPUBLIC**
U Borové 69
CZ-58001 Havlíčkův Brod
Phone: +420 (0)569 777 777
Fax: +420 (0)569-777 778

Beijer Electronics A/S **DENMARK**
Lykkegårdsvej 17, 1.
DK-4000 Roskilde
Phone: +45 (0)46/ 75 76 66
Fax: +45 (0)46 / 75 56 26

Beijer Electronics Eesti OÜ **ESTONIA**
Pärnu mnt.160i
EE-11317 Tallinn
Phone: +372 (0)6 / 51 81 40
Fax: +372 (0)6 / 51 81 49

Beijer Electronics OY **FINLAND**
Jaakonkatu 2
FIN-01620 Vantaa
Phone: +358 (0)207 / 463 500
Fax: +358 (0)207 / 463 501

UTECO A.B.E.E. **GREECE**
5, Mavrogenous Str.
GR-18542 Piraeus
Phone: +30 211 / 1206 900
Fax: +30 211 / 1206 999

MELTRADE Ltd. **HUNGARY**
Fertő utca 14.
HU-1107 Budapest
Phone: +36 (0)1 / 431-9726
Fax: +36 (0)1 / 431-9727

Beijer Electronics SIA **LATVIA**
Vestienas iela 2
LV-1035 Riga
Phone: +371 (0)784 / 2280
Fax: +371 (0)784 / 2281

Beijer Electronics UAB **LITHUANIA**
Savanoriu Pr. 187
LT-02300 Vilnius
Phone: +370 (0)5 / 232 3101
Fax: +370 (0)5 / 232 2980

EUROPEAN REPRESENTATIVES

ALFATRADE Ltd. **MALTA**
99, Paola Hill
Malta- Paola PLA 1702
Phone: +356 (0)21 / 697 816
Fax: +356 (0)21 / 697 817

INTEHSIS srl **MOLDOVA**
bld. Traian 23/1
MD-2060 Kishinev
Phone: +373 (0)22 / 66 4242
Fax: +373 (0)22 / 66 4280

Koning & Hartman b.v. **NETHERLANDS**
Haarlerbergweg 21-23
NL-1101 CH Amsterdam
Phone: +31 (0)20 / 587 76 00
Fax: +31 (0)20 / 587 76 05

Beijer Electronics AS **NORWAY**
Postboks 487
NO-3002 Drammen
Phone: +47 (0)32 / 24 30 00
Fax: +47 (0)32 / 84 85 77

MPL Technology Sp. z o.o. **POLAND**
Ul. Krakowska 50
PL-32-083 Balice
Phone: +48 (0)12 / 630 47 00
Fax: +48 (0)12 / 630 47 01

Sirius Trading & Services srl **ROMANIA**
Aleea Lacul Morii Nr. 3
RO-060841 Bucuresti, Sector 6
Phone: +40 (0)21 / 430 40 06
Fax: +40 (0)21 / 430 40 02

Craft Con. & Engineering d.o.o. **SERBIA**
Bulevar Svetog Cara Konstantina 80-86
SER-18106 Nis
Phone: +381 (0)18 / 292-24-4/5
Fax: +381 (0)18 / 292-24-4/5

INEA SR d.o.o. **SERBIA**
Izletnicka 10
SER-113000 Smederevo
Phone: +381 (0)26 / 617 163
Fax: +381 (0)26 / 617 163

AutoCont Control s.r.o. **SLOVAKIA**
Radlinského 47
SK-02601 Dolny Kubin
Phone: +421 (0)43 / 5868210
Fax: +421 (0)43 / 5868210

CS MTrade Slovensko, s.r.o. **SLOVAKIA**
Vajanskeho 58
SK-92101 Piestany
Phone: +421 (0)33 / 7742 760
Fax: +421 (0)33 / 7735 144

INEA d.o.o. **SLOVENIA**
Stegne 11
SI-1000 Ljubljana
Phone: +386 (0)1 / 513 8100
Fax: +386 (0)1 / 513 8170

Beijer Electronics AB **SWEDEN**
Box 426
SE-20124 Malmö
Phone: +46 (0)40 / 35 86 00
Fax: +46 (0)40 / 35 86 02

Econotec AG **SWITZERLAND**
Hinterdorfstr. 12
CH-8309 Nürensdorf
Phone: +41 (0)44 / 838 48 11
Fax: +41 (0)44 / 838 48 12

GTS **TURKEY**
Darülaceze Cad. No. 43 KAT. 2
TR-34384 Okmeydanı-Istanbul
Phone: +90 (0)212 / 320 1640
Fax: +90 (0)212 / 320 1649

CSC Automation Ltd. **UKRAINE**
4-B, M. Raskovoyi St.
UA-02660 Kiev
Phone: +380 (0)44 / 494 33 55
Fax: +380 (0)44 / 494-33-66

EURASIAN REPRESENTATIVES

Kazpromautomatics Ltd. **KAZAKHSTAN**
Mustafina Str. 7/2
KAZ-470046 Karaganda
Phone: +7 7212 / 50 11 50
Fax: +7 7212 / 50 11 50

MIDDLE EAST REPRESENTATIVES

TEXEL ELECTRONICS Ltd. **ISRAEL**
2 Ha´umanut, P.O.B. 6272
IL-42160 Netanya
Phone: +972 (0)9 / 863 39 80
Fax: +972 (0)9 / 885 24 30

CEG INTERNATIONAL **LEBANON**
Cebaco Center/Block A Autostrade DORA
Lebanon - Beirut
Phone: +961 (0)1 / 240 430
Fax: +961 (0)1 / 240 438

AFRICAN REPRESENTATIVE

CBI Ltd. **SOUTH AFRICA**
Private Bag 2016
ZA-1600 Isando
Phone: + 27 (0)11 / 928 2000
Fax: + 27 (0)11 / 392 2354