Side B (Side A JAPANESE / Side B ENGLISH)

JY997D46001J

1

2

MITSUBISHI ELECTRIC

Programmable Controller
MELSEC-F

FX3G SERIES PROGRAMMABLE CONTROLLERS

HARDWARE MANUAL

FX3G

Manual Number	JY997D46001
Revision	J
Date	September 2025

This manual describes the part names, dimensions, mounting, cabling and specifications for the product. This manual is extracted from FX3G Series User's Manual - Hardware Edition. Refer to FX3G Series User's Manual - Hardware Edition for more details. Before use, read this manual and manuals of relevant products fully to acquire proficiency in the handling and operating the product. Make sure to learn all the product information, safety information, and precautions.
And, store this manual in a safe place so that you can take it out and read it whenever necessary. Always forward it to the end user.
Registration
Phillips is a registered trademark of Phillips Screw Company.
The company name and the product name to be described in this manual are the registered trademarks or trademarks of each company.

Effective September 2025
Specifications are subject to change without notice.
© 2011 Mitsubishi Electric Corporation

Safety Precaution (Read these precautions before use.)

If the equipment is used in a manner not specified by the manufacturer, the protection provided by the equipment may be impaired.
This manual classifies the safety precautions into two categories:
⚠WARNING and ⚠CAUTION.

⚠WARNING	Indicates that incorrect handling may cause hazardous conditions, resulting in death or severe injury.
⚠CAUTION	Indicates that incorrect handling may cause hazardous conditions, resulting in medium or slight personal injury or physical damage.

Depending on the circumstances, procedures indicated by ⚠CAUTION may also cause severe injury.
It is important to follow all precautions for personal safety.

STARTUP AND MAINTENANCE PRECAUTIONS ⚠WARNING

- Do not touch any terminal while the PLC's power is on.
  Doing so may cause electric shock or malfunctions.
- Before cleaning or retightening terminals externally cut off all phases of the power supply.
  Failure to do so may cause electric shock.
- Use the battery for memory backup correctly in FX3G Series User's Manual - Hardware Edition.
  - Use the battery only for the specified purpose.
  - Connect the battery correctly.
  - Do not charge, disassemble, heat, put in fire, short-circuit, connect reversely, weld, swallow or burn the battery, or apply excessive forces (vibration, impact, drop, etc.) to the battery.
  - Do not store or use the battery at high temperatures or expose to direct sunlight.
  - Do not expose to water, bring near fire or touch liquid leakage or other contents directly.
  - Incorrect handling of the battery may cause heat excessive generation, bursting, ignition, liquid leakage or deformation, and lead to injury, fire or failures and malfunctions of facilities and other equipment.
  - When replacing the battery, make sure to use our specified product (FX3U-32BL).
  - When a battery error occurs ("ALM" LED is lit in red), follow the description in FX3G Series User's Manual - Hardware Edition.
- Before modifying or disrupting the program in operation or running the PLC, carefully read through this manual and the associated manuals and ensure the safety of the operation.
  An operation error may damage the machinery or cause accidents.

STARTUP AND MAINTENANCE PRECAUTIONS ⚠CAUTION

- Turn off the power to the PLC before attaching or detaching the memory cassette. If the memory cassette is attached or detached while the PLC's power is on, the data in the memory may be destroyed, or the memory cassette may be damaged.
- Do not disassemble or modify the PLC.
  Doing so may cause fire, equipment failures, or malfunctions.
  For repair, contact your local Mitsubishi Electric representative.
- Turn off the power to the PLC before connecting or disconnecting any extension cable.
  Failure to do so may cause equipment failures or malfunctions.
- Turn off the power to the PLC before attaching or detaching the following devices.
  Failure to do so may cause equipment failures or malfunctions.
  - Peripheral devices, Display module, expansion boards, and special adapters
  - Connector conversion adapter, extension blocks, and FX Series terminal blocks
  - Battery and memory cassette
- Do not use the chemicals for cleaning.
- If there is the possibility of touching the PLC inside a control panel in maintenance, make sure to discharge to avoid the influence of static electricity.

DISPOSAL PRECAUTIONS ⚠CAUTION

- Please contact a certified electronic waste disposal company for the environmentally safe recycling and disposal of your device. When disposing of batteries, separate them from other waste according to local regulations.
  (For details of the Battery Directive in EU countries, refer to FX3G Series User's Manual - Hardware Edition.)

TRANSPORTATION AND STORAGE PRECAUTIONS ⚠CAUTION

- When transporting the FX3G Series PLC incorporating the optional battery, turn on the PLC before shipment, confirm that the battery mode is set using a parameter and the ALM LED is OFF, and check the battery life.
  If the PLC is transported with the ALM LED on or the battery exhausted, the battery-backed data may be unstable during transportation.
- The PLC is a precision instrument. During transportation, avoid impacts larger than those specified in Section 2.1 by using dedicated packaging boxes and shock-absorbing palettes.
  Failure to do so may cause failures in the PLC.
  After transportation, verify operation of the PLC and check for damage of the mounting part, etc.
- When transporting lithium batteries, follow required transportation regulations.
  (For details of the regulated products, refer to FX3G Series User's Manual - Hardware Edition.)

Associated manuals

How to obtain manuals

For the necessary product manuals or documents, consult with your local Mitsubishi Electric representative.

Associated manuals

FX3G Series PLC (main unit) comes with this document (hardware manual).
For a detailed explanation of the FX3G Series hardware and information on instructions for PLC programming and special extension unit/block, refer to the relevant documents.

Manual name	Manual No.	Description
FX3G Series User's Manual - Hardware Edition	JY997D31301	Explains FX3G Series PLC specification details for I/O, wiring, installation, and maintenance.
FX3S/FX3G/FX3GC/ FX3U/FX3UC Series Programming Manual - Basic & Applied Instruction Edition	JY997D16601	Describes PLC programming for basic/ applied instructions STL/ SFC programming and devices.
MELSEC-Q/L/F Structured Programming Manual (Fundamentals)	SH-080782	Programming methods, specifications, functions, etc. required to create structured programs.
FXCPU Structured Programming Manual [Device & Common]	JY997D26001	Devices, parameters, etc. provided in structured projects of GX Works2.
FXCPU Structured Programming Manual [Basic & Applied Instruction]	JY997D34701	Sequence instructions provided in structured projects of GX Works2.
FXCPU Structured Programming Manual [Application Functions]	JY997D34801	Application functions provided in structured projects of GX Works2.
FX Series User's Manual - Data Communication Edition	JY997D16901	Explains N:N link, parallel link, computer link, no protocol communication by RS instructions/FX2N-232IF.
FX3S/FX3G/FX3GC/ FX3U/FX3UC Series User's Manual - Analog Control Edition	JY997D16701	Describes specifications for analog control and programming methods for FX3S/FX3G/FX3GC/ FX3U/FX3UC Series PLC.
FX3S/FX3G/FX3GC/ FX3U/FX3UC Series User's Manual - Positioning Control Edition	JY997D16801	Explains the specifications for positioning control of FX3S/FX3G/FX3GC/ FX3U/FX3UC Series and programming procedures

Certification of UL, cUL standards

Please consult with Mitsubishi Electric for information on UL, cUL standard practices and the corresponding types of equipment.

Compliance with EC directive(CE Marking)

This product complies with EC directive, however, this document does not guarantee that a mechanical system including this product will comply with EC directive.
Compliance to EMC directive and Low Voltage Directive (LVD) of the entire mechanical system should be checked by the user / manufacturer. For more details please contact the local Mitsubishi Electric sales site.

Caution for compliance with EC Directive

- Please use the FX3G Series programmable controllers while installed in conductive shielded control panels under a general industrial environment.
- Programmable controllers are open-type devices that must be installed and used within conductive control panels. Please secure the control box lid to the control box (for conduction). Installation within a control box greatly affects the safety of the system and aids in shielding noise from the programmable controller.
- For the control panel, use the product having sufficient strength, fire protectiveness and shielding property to an installation environment.
- 24 V DC of the power supply must be supplied from the circuit double/reinforced insulated from the main power supply (MAINS).

Caution for compliance with the Low Voltage Directive (LVD) (EN61010-2-201:2013)(*1)

- To an external connection port other than AC power supply terminal and AC input/output terminal, connect the circuit separated from a dangerous voltage by a double/reinforced insulation.
- Between the commons having the adjacent relay output terminals, if an external power supply is higher than 120 V AC, the insulation is basic. Therefore, when using 120 V AC or higher external power supply and 30 V DC/AC or lower external power supply between the adjacent commons, do not handle 30 V DC/ AC or lower external power supply as a touchable part, (When handling 30 V DC/AC or lower external power supply as a touchable part, add a basic insulation.)

- Do not wire two or more crimp terminals to one terminal. (If the wiring with two or more wires is needed, take an appropriate action such as adding an external terminal.)
- For crimp terminals to be used for the wiring applied with 30 V AC or higher, use the products with insulating sleeves.
- Cutoff device such as a breaker or a circuit protector should be installed in accordance with the following precautions.
  - Use EN60947-1 or EN60947-3 standards.
  - Place the cutoff device so that it can be operated easily.
  - Specify that the cutoff device is for this equipment.

(*1) For the time of compliance with the Low Voltage Directive (LVD) (EN61010-2-201:2013), refer to FX3G Series User's Manual - Hardware Edition.

Compliance with UKCA marking

The requirements for compliance with UKCA marking are the same as that with EC directive (CE marking).

Incorporated Items

Check if the following product and items are included in the package:

	Included Items	
■ Main units		
FX3G-14M□ to FX3G-60M□	Product	1 unit
	Dust proof protection sheet	1 sheet
	Manuals [Japanese(*1)/English]	1 manual
■ Input/output powered extension units		
FX2N-32E□, FX2N-48E□	Product	1 unit
	Extension cable	1 cable
	Input/output number label	1 sheet
■ Input/output extension blocks		
FX2N-8E□ FX2N-16E□	Product	1 unit
	Input/output number label	1 sheet

(*1) The FX3G-□□M□/ES-A becomes Chinese version.

1. Outline

For the input/output extension units/blocks, refer to the following manual.

→ **Refer to FX3G Series User's Manual - Hardware Edition.**

1.1 Part names

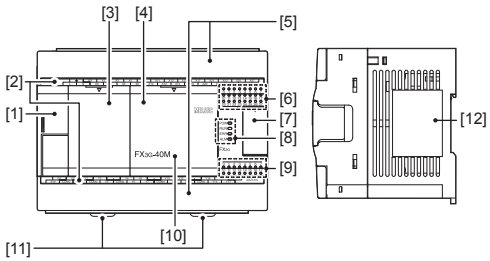

No.	Name
[1]	Peripheral device connecting connector cover
[2]	Terminal names ⏚ shows a function grounding terminal.
[3]	Top cover(S) (40points, 60points type only)
[4]	Top cover
[5]	Terminal block covers
[6]	Input display LEDs (red)
[7]	Extension device connecting connector cover
[8]	Operation status display LEDs POW: Green: On while power is on the PLC. RUN: Green: On while the PLC is running. ERR: Red: Flashing when a program error occurs. ERR: Red: Lights when a CPU error occurs. ALM: Red: Lights when the battery voltage drops. (When the optional battery is used)
[9]	Output display LEDs (red)
[10]	Model name (abbreviation)
[11]	DIN rail mounting hooks
[12]	Nameplate printing ⚠ is a mark that instructs to use the cable with an appropriate temperature rating(80°C or more) for wiring.

With terminal cover open

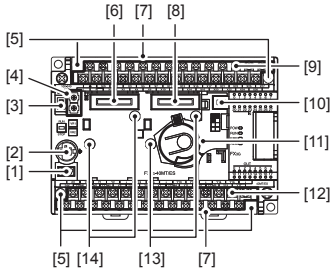

No.	Name
[1]	Peripheral device connecting connector (USB)
[2]	Peripheral device connecting connector (RS-422)
[3]	RUN/STOP switch
[4]	Variable analog potentiometers Upper side : VR1, Lower side : VR2
[5]	Terminal block mounting screws
[6]	Optional equipment connector1
[7]	Terminal cover (FX3G-□□M□/ES-A is excluded)
[8]	Optional equipment connector2 (40points, 60points type only)
[9]	Power supply terminal, Input (X) terminals
[10]	Battery connector
[11]	Battery holder
[12]	Power supply terminal, Output (Y) terminals
[13]	Optional equipment connecting screw holes2 (40points, 60points type only)
[14]	Optional equipment connecting screw holes1

1.2 External dimensions and weight

→ For the input/output extension units/blocks, refer to FX3G Series User's Manual - Hardware Edition.

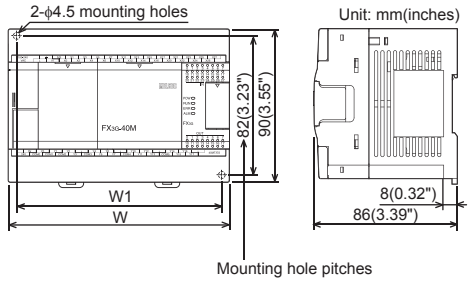

Model name	W: mm (inches)	W1: mm (inches) Direct mounting hole pitches	MASS (Weight): kg (lbs)
FX3G-14M□	90 (3.55")	82 (3.23")	Approx. 0.50 (1.10lbs)
FX3G-24M□	90 (3.55")	82 (3.23")	Approx. 0.55 (1.21lbs)
FX3G-40M□	130 (5.12")	122 (4.81")	Approx. 0.70 (1.54lbs)
FX3G-60M□	175 (6.89")	167 (6.58")	Approx. 0.85 (1.87lbs)

Installation

- 35-mm-wide DIN rail or Direct (screw) mounting (M4)

2. Installation (general specifications)

As for installation of the input/output extension units/blocks, special adapters and expansion boards, refer to the following manual.

→ **Refer to FX3G Series User's Manual - Hardware Edition.**

INSTALLATION PRECAUTIONS ⚠**CAUTION**

- Use the product within the generic environment specifications described in section 2.1 of this manual.
  Never use the product in areas with excessive dust, oily smoke, conductive dusts, corrosive gas (salt air, Cl_2, H_2S, SO_2 or NO_2), flammable gas, vibration or impacts, or exposed to high temperature, condensation, or rain and wind.
  If the product is used in such conditions, electric shock, fire, malfunctions, deterioration or damage may occur.
- Do not touch the conductive parts of the product directly to avoid failure or malfunctions.
- Install the product securely using a DIN rail or mounting screws.
- Install the product on a flat surface.
  If the mounting surface is rough, undue force will be applied to the PC board, thereby causing nonconformities.
- When drilling screw holes or wiring, make sure cutting or wire debris does not enter the ventilation slits.
  Failure to do so may cause fire, equipment failures or malfunctions.
- Be sure to remove the dust proof sheet from the PLC's ventilation port when installation work is completed. Failure to do so may cause fire, equipment failures or malfunctions.
- Connect the extension cables, peripheral device cables, input/output cables and battery connecting cable securely to their designated connectors.
  Unsecured connection may cause malfunctions.
- Turn off the power before attaching or detaching the following devices.
  Failure to do so may cause device failures or malfunctions.
  - Peripheral devices, display modules, expansion boards and special adapters
  - Extension units/blocks and the FX Series terminal block
  - Battery and memory cassette

Notes

- When a dust proof sheet is supplied with an extension unit/block, keep the sheet applied to the ventilation slits during installation and wiring work.
- To prevent temperature rise, do not install the PLC on a floor, a ceiling or a vertical surface.
  Install it horizontally on a wall as shown in section 2.2.
- Keep a space of 50mm (1.97") or more between the unit main body and another device or structure (part A). Install the unit as far away as possible from high-voltage lines, high-voltage devices and power equipment.
  Failure to do so may cause fire, equipment failures or malfunctions.

WIRING PRECAUTIONS ⚠**WARNING**

- Cut off all phases of the power supply externally before installation or wiring work in order to avoid damage to the product or electric shock.
- The temperature rating of the cable should be 80°C or more.

2.1 Generic specifications

Item	Specification				
Ambient temperature	0 to 55°C (32 to 131°F) when operating and -25 to 75°C (-13 to 167°F) when stored				
Ambient humidity	5 to 95%RH (no condensation) when operating				
Vibration resistance (*1)		Frequency (Hz)	Acceleration (m/s^2)	Half amplitude (mm)	Sweep Count for X, Y, Z: 10 times (80 min in each direction)
	When installed on DIN rail	10 to 57	-	0.035	
		57 to 150	4.9	-	
	When installed directly	10 to 57	-	0.075	
		57 to 150	9.8	-	
Shock resistance (*1)	147m/s^2 Acceleration, Action time: 11ms, 3 times by half-sine pulse in each direction X, Y, and Z				
Noise resistance	By noise simulator at noise voltage of 1,000Vp-p, noise width of 1μs, rise time of 1ns and period of 30 to 100Hz				
Dielectric withstand voltage (*2)	1.5kV AC for one minute	Between each terminals(*2) and ground terminal			
	500V AC for one minute				
Insulation resistance (*2)	5MΩ or higher by 500V DC insulation resistance tester				
Grounding	Class D grounding (grounding resistance: 100Ω or less) <Common grounding with a heavy electrical system is not allowed.>(*3)				
Working atmosphere	Free from corrosive or flammable gas and excessive conductive dusts				
Working altitude	<2000m(*4)				
Installation location	Inside a control panel (*5)				
Over voltage category	II or less				
Pollution degree	2 or less				

(*1) The criterion is shown in IEC61131-2.

(*2) Dielectric withstand voltage and insulation resistance are shown in the following table.

Terminal	Dielectric strength	Insulation resistance
■ Main units, Input/output extension units/blocks		
Between power supply terminal (AC power) and ground terminal	1.5kV AC for one minute	5MΩ or higher by 500V DC insulation resistance tester
Between power supply terminal (DC power) and ground terminal	500V AC for one minute	
Between input terminal (24V DC) and ground terminal		
Between input terminal (100V AC) and ground terminal(*6)	1.5kV AC for one minute	
Between output terminal (relay) and ground terminal		
Between output terminal (transistor) and ground terminal	500V AC for one minute	
Between output terminal (triac) and ground terminal(*6)	1.5kV AC for one minute	
■ Expansion boards, Special function adapters, Special function blocks		
Between terminal of expansion board (except FX3G-4EX-BD and FX3G-2EYT-BD) and ground terminal	Not allowed	Not allowed
Between FX3G-4EX-BD input terminal (24 V DC) and ground terminal	500V AC for 1min	5MΩ or higher by 500V DC insulation resistance tester
Between FX3G-2EYT-BD output terminal (transistor) and ground terminal		
Between terminal of special adapter and ground terminal		
Special function block	Each manual	

For dielectric with stand voltage test and insulation resistance test of each product, refer to the following manual.

→ **Refer to FX3G Series User's Manual - Hardware Edition.**

(*3) For common grounding, refer to section 3.3.

(*4) The PLC cannot be used at a pressure higher than the atmospheric pressure to avoid damage.

(*5) The programmable controller is assumed to be installed in an environment equivalent to indoor.

(*6) Input/output extension units/blocks only.

2.2 Installation location

Install the PLC in an environment conforming to the generic specifications (section 2.1), installation precautions and notes.
For more details, refer to FX3G Series User's Manual - Hardware Edition.

Installation location in enclosure

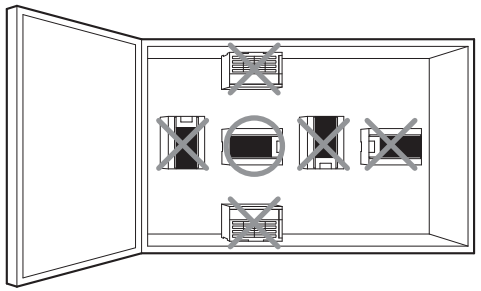

Space in enclosure

Extension devices can be connected on the left and right sides of the main unit of the PLC.
If you intend to add extension devices in the future, keep necessary spaces on the left and right sides.

Configuration without extension cable

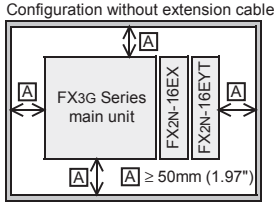

Configuration in 2 stages with extension cable

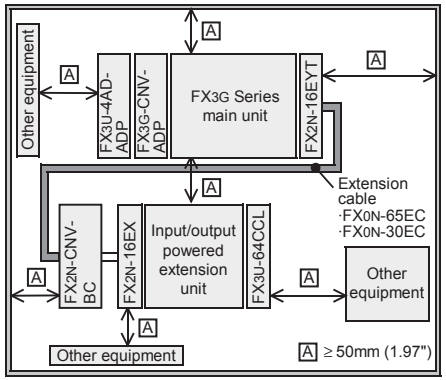

2.2.1 Affixing The Dust Proof Sheet

The dust proof sheet should be affixed to the ventilation port before beginning the installation and wiring work.

→ **For the affixing procedure, refer to the instructions on the dust proof sheet.**

Be sure to remove the dust proof sheet when the installation and wiring work is completed.

2.3 Procedures for installing to and detaching from DIN rail

The products can be installed on a DIN46277 rail [35 mm (1.38") wide].
This section explains the installations of the main units.
For the input/output extension units/blocks and special adapters, refer to the following manual.

→ **Refer to FX3G Series User's Manual - Hardware Edition.**

2.3.1 Installation

1) Push out all DIN rail mounting hooks (below fig.A).

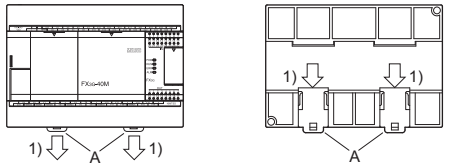

2) Fit the upper edge of the DIN rail mounting groove (right fig.C) onto the DIN rail.

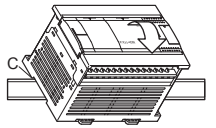

3) Lock the DIN rail mounting hooks (below fig.D) while pressing the PLC against the DIN rail.

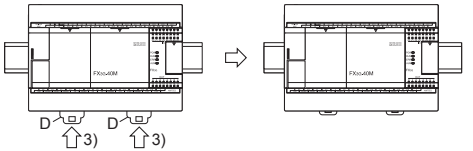

2.4 Procedures for installing directly (with M4 screws)

The product can be installed directly on the panel (with screws).
This section explains the installation of the main units.
As for the details of the installation/detaching for input/output extension units/blocks and special adapters, refer to the following manual.

→ **Refer to FX3G Series User's Manual - Hardware Edition.**

2.4.1 Mounting hole pitches

Refer to the External Dimensions (section 1.2) for the product's mounting hole pitch information.
As for the details of the mounting hole pitches for extension unit/ block and special adapters, refer to the following manual.

→ **Refer to FX3G Series User's Manual - Hardware Edition.**

2.4.2 Installation

1) Make mounting holes in the mounting surface referring to the external dimensions diagram.
2) Fit the main unit (A in the right figure) based on the holes, and secure it with M4 screws (B in the right figure).
   The mounting hole pitches and number of screws depend on the product. Refer to the external dimensions diagram (Section 1.2).

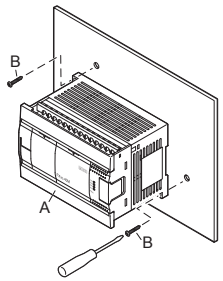

3. Power supply/input/output specifications and examples of external wiring

As for the details of the power supply wiring and input/output wiring, refer to the following manual.

→ **Refer to FX3G Series User's Manual - Hardware Edition.**

DESIGN PRECAUTIONS ⚠**WARNING**

- Make sure to have the following safety circuits outside of the PLC to ensure safe system operation even during external power supply problems or PLC failure.
  Otherwise, malfunctions may cause serious accidents.
  1) Most importantly, have the following: an emergency stop circuit, a protection circuit, an interlock circuit for opposite movements (such as normal vs. reverse rotation), and an interlock circuit (to prevent damage to the equipment at the upper and lower positioning limits).
  2) Note that when the PLC CPU detects an error, such as a watchdog timer error, during self-diagnosis, all outputs are turned off. Also, when an error that cannot be detected by the PLC CPU occurs in an input/output control block, output control may be disabled.
     External circuits and mechanisms should be designed to ensure safe machinery operation in such a case.
  3) Note that when an error occurs in a relay, triac or transistor output device, the output could be held either on or off.
     For output signals that may lead to serious accidents, external circuits and mechanisms should be designed to ensure safe machinery operation in such a case.

DESIGN PRECAUTIONS ⚠**CAUTION**

- Do not bundle the control line together with or lay it close to the main circuit or power line. As a guideline, lay the control line at least 100mm (3.94") or more away from the main circuit or power line.
  Noise may cause malfunctions.
- Install module so that excessive force will not be applied to the built-in programming connectors, power connectors or I/O connectors.
  Failure to do so may result in wire damage/breakage or PLC failure.

Notes

- Simultaneously turn on and off the power supplies of the main unit and extension devices.
- Even if the AC power supply causes an instantaneous power failure for less than 10 ms, the PLC can continue to operate.
- Even if the DC power supply causes an instantaneous power failure for less than 5 ms, the PLC can continue to operate.
- If a long-time power failure or an abnormal voltage drop occurs, the PLC stops, and output is turned off. When the power supply is restored, it will automatically restart (when the RUN input is on).

WIRING PRECAUTIONS ⚠**WARNING**

- Cut off all phases of the power supply externally before installation or wiring work in order to avoid damage to the product or electric shock.

WIRING PRECAUTIONS ⚠**CAUTION**

- Connect the AC power supply to the dedicated terminals specified in this manual.
  If an AC power supply is connected to a DC input/output terminal or DC power supply terminal, the PLC will burn out.
- Do not wire vacant terminals externally.
  Doing so may damage the product.
- Perform class D grounding (grounding resistance: 100Ω or less) to the grounding terminal on the FX3G Series main unit with a wire 2 mm^2 or thicker.
  Do not use common grounding with heavy electrical systems (refer to section 3.3).
- When drilling screw holes or wiring, make sure cutting or wire debris does not enter the ventilation slits.
  Failure to do so may cause fire, equipment failures or malfunctions.
- Make sure to properly wire to the terminal in accordance with the following precautions.
  Failure to do so may cause electric shock, equipment failures, a short-circuit, wire breakage, malfunctions, or damage to the product.
  - The disposal size of the cable end should follow the dimensions described in the manual.
  - Tightening torque should follow the specifications in the manual.
  - Tighten the screws using a Phillips-head screwdriver No.2 (shaft diameter 6mm (0.24") or less). Make sure that the screwdriver does not touch the partition part of the terminal block.

Notes

- Input/output wiring 50 to 100m (164'1" to 328'1") long will cause almost no problems of noise, but, generally, the wiring length should be less than 20m (65'7") to ensure the safety.
- Extension cables are easily affected by noise. Lay the cables at a distance of at least 30 to 50mm (1.19" to 1.97") away from the PLC output and other power lines.

3.1 Wiring

This section explains the wiring of the terminal type.
For the connectors types, refer to the following manual.

→ **Refer to FX3G Series User's Manual - Hardware Edition.**

3.1.1 Cable end treatment and tightening torque

For the terminals of FX3G series PLC, M3 screws are used.
The electric wire ends should be treated as shown below.
Tighten the screws to a torque of 0.5 to 0.8 N•m.
Do not tighten terminal screws with a torque outside the above-mentioned range. Failure to do so may cause equipment failures or malfunctions.

- When one wire is connected to one terminal

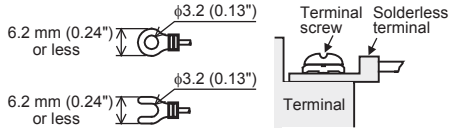

<Reference>

Terminal manufacturer	Type No.	Applicable cable	Certification	Pressure bonding tool
J.S.T. Mfg. Co., Ltd.	FV1.25-B3A	AWG22 to 16	UL Listed	YA-1 (J.S.T. Mfg. Co., Ltd.)
	FV2-MS3	AWG16 to 14		

- When two wires are connected to one terminal(*1)

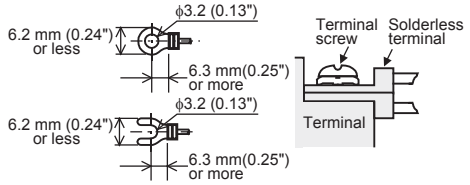

<Reference>

Terminal manufacturer	Type No.	Applicable cable	Certification	Pressure bonding tool
J.S.T. Mfg. Co., Ltd.	FV1.25-B3A	AWG22 to 16	UL Listed	YA-1 (J.S.T. Mfg. Co., Ltd.)

(*1) To adapt the Low Voltage Directive (LVD) (EN61010-2-201:2013) of the EC directive, avoid the wiring with two wires to the built-in terminal, and take an appropriate action such as adding an external terminal.
For the time of compliance with the Low Voltage Directive (LVD) (EN61010-2-201:2013), refer to FX3G Series User's Manual - Hardware Edition.

3.1.2 Removal and installation of quick-release terminal block

Removal — Unscrew the terminal block mounting screw [both right and left screws] evenly, and remove the terminal block.

Installation — Place the terminal block in the specified position, and tighten the terminal block mounting screw evenly [both right and left screws].
Tightening torque 0.4 to 0.5 N•m
Do not tighten the terminal block mounting screws exceeding with a torque outside the above-mentioned range.
Failure to do so may cause equipment failures or malfunctions.
(*) Pay attention so that the center of the terminal block is not lifted.

3.2 Power supply specifications and example of external wiring

As for the details of the power supply specifications and example of external wiring, refer to the following manual.

→ **Refer to FX3G Series User's Manual - Hardware Edition.**

3.2.1 Power supply specifications [Main unit, Input/output extension units]

Item		Specification	
		AC power type	DC power type
Supply voltage		100 to 240V AC	24V DC
Voltage fluctuation range		-15%, +10%	-15%, +20%
Rated frequency		50/60Hz	-
Allowable instantaneous power failure time		Operation can be continued upon occurrence of instantaneous power failure for 10 ms or less.	Operation can be continued upon occurrence of instantaneous power failure for 5 ms or less.
Power fuse	FX3G-14M□, FX3G-24M□	250V 1A	125V 2.5A
	FX3G-40M□, FX3G-60M□	250V 3.15A	125V 3.15A
	FX2N-32E□	250V 3.15A	-
	FX2N-48E□	250V 5A	250V 5A
Rush current	Main unit	30A max. 5ms or less/100 V AC 50A max. 5ms or less/200 V AC	30A max. 1ms or less/24 V DC
	FX2N-32E□, FX2N-48E□	40A max. 5ms or less/100 V AC 60A max. 5ms or less/200 V AC	-
Power consumption (*1)	FX3G-14M□	31W	19W
	FX3G-24M□	32W	21W
	FX3G-40M□	37W	25W
	FX3G-60M□	40W	29W
	FX2N-32E□	30W	-
	FX2N-48E□	35W	30W
24V DC service power supply	Main unit	400mA	-
	FX2N-32E□	250mA	-
	FX2N-48E□	460mA	-
5V DC built-in power supply	FX2N-32E□	690mA or less	690mA or less
	FX2N-48E□		

(*1) This item shows values when all 24V DC service power supplies are used in the maximum configuration connectable to the main unit or input/output extension units,
For the power (current) consumed by the input/output extension units/blocks, refer to FX3G Series User's Manual - Hardware Edition. (The DC power type main unit does not have a 24V DC service power supply.)

→ **For the power consumed by the special extension blocks, refer to the respective manual.**

→ **Refer to FX3G Series User's Manual - Hardware Edition.**

3.2.2 Example of external wiring (AC power type)

100 to 240V AC power is supplied to the main unit and input/output extension unit.

→ **For the details of wiring work, refer to section 3.1.**

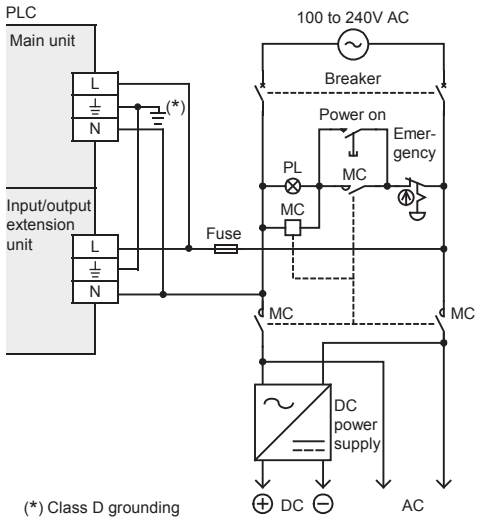

(*) Class D grounding
See section 3.3 for details.

Power supply for loads connected to PLC output terminals

3.2.3 Example of external wiring (DC power type)

24V DC power is supplied to the main unit and input/output extension unit.

→ **For the details of wiring work, refer to section 3.1.**

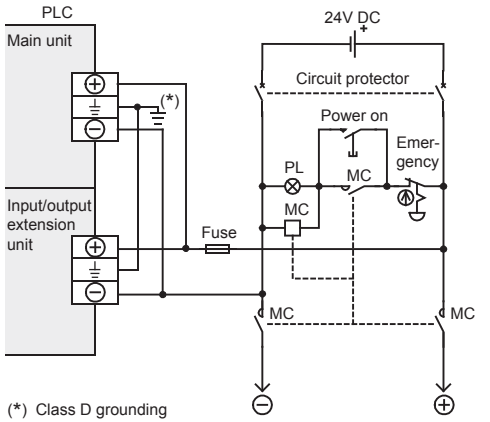

(*) Class D grounding
See section 3.3 for details.

Power supply for loads connected to PLC output terminals

3.3 Grounding

Ground the PLC as stated below.

- Perform class D grounding. (Grounding resistance: 100 Ω or less)
- Ground the PLC independently if possible.
  If it cannot be grounded independently, ground it jointly as shown below.

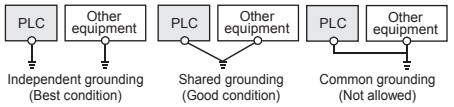

- Use ground wires thicker than AWG14 (2 mm^2).
- Position the grounding point as close to the PLC as possible to decrease the length of the ground wire.

3.4 Input specifications and external wiring

As for the details of the Input specifications and external wiring, refer to the following manual.

→ **Refer to FX3G Series User's Manual - Hardware Edition.**

3.4.1 Input specifications (24V DC input type)

Item			Specification
Number of input points	FX2N-8ER□		4 points (8 points)(*1)
	FX3G-14M□, FX2N-8EX□		8 points
	FX3G-24M□		14 points(16 points)(*1)
	FX2N-16EX□, FX2N-32E□		16 points
	FX3G-40M□, FX2N-48E□		24 points
	FX3G-60M□		36 points(40 points)(*1)
Input connecting type			Refer to FX3G Series User's Manual - Hardware Edition
Input form			
Input signal voltage	Main unit	AC power type	24V DC +10%, -10%
		DC power type	20.4-28.8V DC
	Input/output extension unit	AC power type	24V DC +10%, -10%
		DC power type	24V DC +20%, -30%
Input impedance	Main unit	X000 to X007	3.3kΩ
		X010 or more	4.3kΩ
	Input/output extension unit/block		4.3kΩ
Input signal current	Main unit	X000 to X007	7mA/24V DC
		X010 or more	5mA/24V DC
	Input/output extension unit/block		5mA/24V DC
ON input sensitivity current	Main unit	X000 to X007	4.5mA or more
		X010 or more	3.5mA or more
	Input/output extension unit/block		3.5mA/24V DC
OFF input sensitivity current			1.5mA or less
Input response time			Approx. 10ms

Item	Specification
Input signal form (Input sensor form)	• Sink input: No-voltage contact input NPN open collector transistor • Source input: No-voltage contact input PNP open collector transistor
Input circuit insulation	Photocoupler insulation
Input operation display	LED on panel lights when photocoupler is driven.

(*1) Each value inside ( ) indicates the number of occupied points.

3.4.2 Examples of input wiring [AC power type]

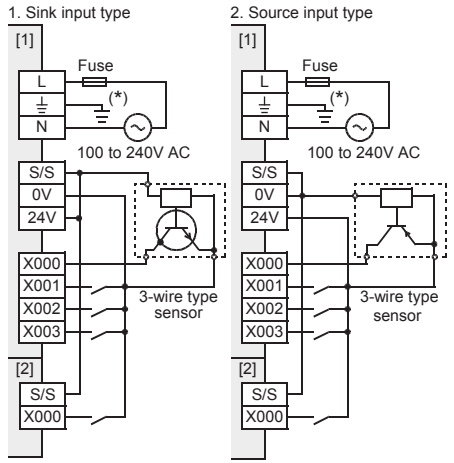

(*) Class D grounding
See section 3.3 for details.

[1]:Main unit, Input/output extension unit
(Common to both sink and source inputs)

[2]:Input/output extension block
(Common to both sink and source inputs)

3.4.3 Examples of input wiring [DC power type]

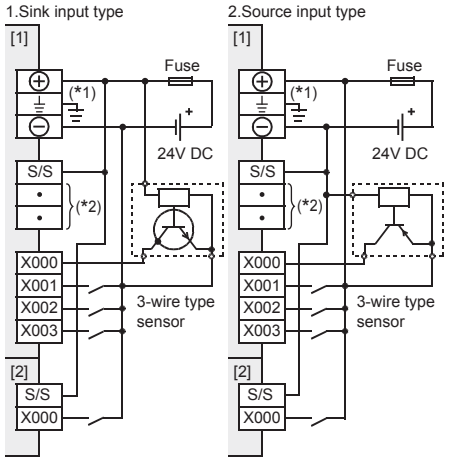

(*1) Class D grounding
See section 3.3 for details.

(*2) Do not connect the [•] terminals with others, since they are not available.

[1]:Main unit, Input/output extension unit
(Common to both sink and source inputs)

[2]:Input/output extension block
(Common to both sink and source inputs)

3.4.4 Instructions for connecting input devices

As for the details of Instructions for connecting input devices, refer to the following manual.

→ **Refer to FX3G Series User's Manual - Hardware Edition.**

1) In the case of no-voltage contact:
The input current of this PLC is 5 to 7mA/24V DC.
Use input devices applicable to this minute current.
If no-voltage contacts (switches) for large current are used, contact failure may occur.

2) In the case of input device with built-in series diode:
The voltage drop of the series diode should be approx. 4V or less.
When lead switches with a series LED are used, up to two switches can be connected in series.
Also make sure that the input current is over the input-sensing level while the switches are ON.

3) In the case of input device with built-in parallel resistance:
Use a device with a parallel resistance of 15kΩ or more.
When the resistance is less than 15kΩ, connect a bleeder resistance.

4) In the case of 2-wire proximity switch:
Use a two-wire proximity switch whose leakage current is 1.5mA or less when the switch is off.
When the current is larger than 1.5mA, connect a bleeder resistance.

3.4.5 Input specifications (100V AC input type)

Item		Specification
Number of input points	FX2N-8EX-UA1/UL	8 points
	FX2N-48ER-UA1/UL	24 points
Input connecting type		Refer to FX3G Series User's Manual - Hardware Edition
Input form		
Input signal voltage		100 to 120 V AC
Input impedance		Approx. 21kΩ/50Hz Approx. 18kΩ/60Hz
Input signal current		4.7mA/100V AC 50Hz 6.2mA/110V AC 60Hz
ON input sensitivity current		3.8mA/80V AC
OFF input sensitivity current		1.7mA/30V AC
Input response time		30 ms or less
Input signal form		Contact input
Input circuit insulation		Photocoupler insulation
Input operation display		LED on panel lights when photocoupler is driven.

3.4.6 Examples of 100V AC input wiring

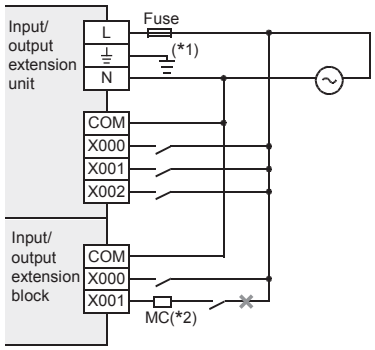

(*1) Class D grounding
See section 3.3 for details.

(*2) Do not take input signals from loads generating surge.

3.5 Relay output specifications and example of external wiring

As for the details of the relay output specifications and external wiring, refer to the following manual.

→ **Refer to FX3G Series User's Manual - Hardware Edition.**

3.5.1 Relay output specifications

Item		Specification
Number of output points	FX2N-8ER□	4 points(8 points)(*1)
	FX3G-14MR□	6 points(8 points)(*1)
	FX2N-8EYR□	8 points
	FX3G-24MR□	10 points(16 points)(*1)
	FX3G-40MR□, FX2N-32ER□, FX2N-16EYR□	16 points
	FX3G-60MR□, FX2N-48ER□	24 points
Output connecting type		Refer to FX3G Series User's Manual - Hardware Edition
Output form		Relay
External power supply		30V DC or less 240V AC or less(*2)
Max. load	Resistance load	2A/point(*3)
	Inductive load	80VA
Min. load		5V DC, 2mA (reference value)
Open circuit leakage current		-
Response time	OFF→ON	Approx. 10ms
	ON→OFF	
Circuit insulation		Mechanical insulation
Display of output operation		LED lights when power is applied to relay coil.

(*1) Each value inside ( ) indicates the number of occupied points.

(*2) Between 250V and 240V CE, UL, and cUL are not compliant.

(*3) The total load current of resistance loads per common terminal should be the following value or less.
- 1 output point/common terminal : 2A
- 4 output points/common terminal : 8A
- 8 output points/common terminal : 8A

As for the number of outputs per common terminal, refer to "Chapter 4 interpretation of partition" and the following manual.

→ **Refer to FX3G Series User's Manual - Hardware Edition.**

3.5.2 Life of relay output contact

The product life of relay contacts considerably varies depending on the load type used. Take care that loads generating reverse electromotive force or rush current may cause poor contact or deposition of contacts which may lead to considerable reduction of the contact product life.

1) Inductive load
Inductive loads generate large reverse electromotive force between contacts at shutdown may cause arcing. At a fixed current consumption, as the power factor (phase between current and voltage) gets smaller, the arc energy gets larger.
The standard life of the contact used for Inductive loads, such as contactors and solenoid valves, is 500 thousand operations at 20VA.
The following table shows the approximate life of the relay based on the results of our operation life test.
Test condition: 1 sec. ON / 1 sec. OFF.

Load capacity		Contact life
20VA	0.2A/100V AC	3 million times
	0.1A/200V AC	
35VA	0.35A/100V AC	1 million times
	0.17A/200V AC	
80VA	0.8A/100V AC	2 hundred thousand times
	0.4A/200V AC	

The product life of relay contacts becomes considerably shorter than the above conditions when the rush overcurrent is shut down.

→ **For countermeasures while using inductive loads, refer to Subsection 3.5.4.**

Some types of inductive loads generate rush current 5 to 15 times the stationary current at activation. Make sure that the rush current does not exceed the current corresponding to the maximum specified resistance load.

2) Lamp load
Lamp loads generally generate rush current 10 to 15 times the stationary current. Make sure that the rush current does not exceed the current corresponding to the maximum specified resistance load.

3) Capacitive load
Capacitive loads can generate rush current 20 to 40 times the stationary current. Make sure that the rush current does not exceed the current corresponding to the maximum specified resistance load. Capacitive loads such as capacitors may be present in electronic circuit loads including inverters.

→ **For the maximum specified resistance load, refer to Subsection 3.5.1.**

3.5.3 Example of relay output wiring

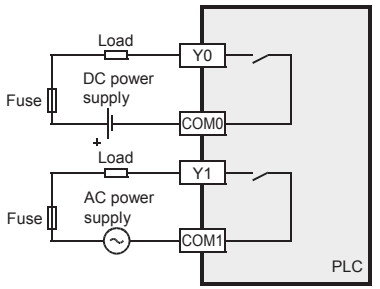

3.5.4 Cautions in external wiring

As for the details of Instructions for connecting input devices, refer to the following manual.

→ **Refer to FX3G Series User's Manual - Hardware Edition.**

Protection circuit for load short-circuiting

When a load connected to the output terminal short-circuits, the printed circuit board may be burnt out. Fit a protective fuse on the output circuit.

Protection circuit of contact when inductive load is used

An internal protection circuit for the relays is not provided for the relay output circuit in this product. It is recommended to use inductive loads with built-in protection circuits. When using loads without built-in protection circuits, insert an external contact protection circuit, etc. to reduce noise and extend the product life.

1) DC circuit
Connect a diode in parallel with the load.
Use a diode (for commutation) having the following specifications.

Item	Standard
Reverse voltage	5 to 10 times the load voltage
Forward current	Load current or more

2) AC circuit
Connect the surge absorber (combined CR components such as a surge killer and spark killer, etc.) parallel to the load.
Select the rated voltage of the surge absorber suitable to the output used. Refer to the table below for other specifications.

Item	Standard
Electrostatic capacity	Approx. 0.1μF
Resistance value	Approx. 100 to 200Ω

Interlock

Loads, such as contactors for normal and reverse rotations, that must not be turned on simultaneously should have an interlock in the PLC program and an external interlock.

Common mode

Use output contacts of the PLC in the common mode.

3.6 Transistor output specifications and example of external wiring

As for the details of the transistor output specifications and external wiring, refer to the following manual.

→ **Refer to FX3G Series User's Manual - Hardware Edition.**

3.6.1 Transistor output specifications

Item			Specification
Number of output points		FX3G-14MT□	6 points (8 points)(*1)
		FX2N-8EYT□	8 points
		FX3G-24MT□	10 points (16 points)(*1)
		FX3G-40MT□, FX2N-32ET□, FX2N-16EYT□	16 points
		FX3G-60MT□, FX2N-48ET□	24 points
Output connecting type			Refer to FX3G Series User's Manual - Hardware Edition
Output form		FX3G-□MT/ES(-A), FX3G-□MT/DS, FX2N-□ET, FX2N-48ET-D, FX2N-□EYT, FX2N-8EYT-H	Transistor(Sink)
		FX3G-□MT/□SS FX2N-□ET-ESS/UL, FX2N-48ET-DSS, FX2N-□EYT-ESS/UL	Transistor(Source)
External power supply			5-30V DC
Max. load	Resistance load	FX3G-□MT□, FX2N-□ET, FX2N-□ET-□, FX2N-□EYT, FX2N-□EYT-ESS/UL	0.5A/point(*2)
		FX2N-8EYT-H	1A/point(*3)
		FX2N-16EYT-C	0.3A/point(*2)
	Inductive load	FX3G-□MT□, FX2N-□ET, FX2N-□ET-□, FX2N-□EYT, FX2N-□EYT-ESS/UL	12W/24V DC(*4)
		FX2N-8EYT-H	24W/24V DC(*3)
		FX2N-16EYT-C	7.2W/24V DC(*4)
Min. load			–
Open circuit leakage current			0.1mA or less/30V DC
ON voltage			1.5V or less

Item				Specification
Response time	OFF → ON	FX3G-14MT□, FX3G-24MT□	Y000, Y001	5μs or less/10mA or more (5-24V DC)
			Y002 or more	0.2ms or less/200mA or more (at 24V DC)
		FX3G-40MT□, FX3G-60MT□	Y000 to Y002	5μs or less/10mA or more (5-24V DC)
			Y003 or more	0.2ms or less/200mA or more (at 24V DC)
		Input/output extension units/blocks		0.2ms or less/200mA or more (at 24V DC)
	ON → OFF	FX3G-14MT□, FX3G-24MT□	Y000, Y001	5μs or less/10mA or more (5-24V DC)
			Y002 or more	0.2ms or less/200mA or more (at 24V DC)
		FX3G-40MT□, FX3G-60MT□	Y000 to Y002	5μs or less/10mA or more (5-24V DC)
			Y003 or more	0.2ms or less/200mA or more (at 24V DC)
		Input/output extension units/blocks		0.2ms or less/200mA or more (at 24V DC)
Circuit insulation				Photocoupler insulation
Display of output operation				LED on panel lights when photocoupler is driven.

(*1) Each value inside ( ) indicates the number of occupied points.

(*2) The total load current of resistance loads per common terminal should be the following value or less.
- 4 output points/common terminal : 0.8A

As for the number of outputs per common terminal, refer to "Chapter 4 interpretation of partition" and the following manual.
→ **Refer to FX3G Series User's Manual - Hardware Edition.**

(*3) The response time is as follows in the FX2N-8EYT-H
- OFF→ON : 0.2ms or less/1A
- ON→OFF : 0.4ms or less/1A

(*4) The total of inductive loads per common terminal should be the following value or less.
- 1 output point/common terminal : 12W/24V DC
- 4 output points/common terminal : 19.2W/24V DC

As for the number of outputs per common terminal, refer to "Chapter 4 interpretation of partition" and the following manual.
→ **Refer to FX3G Series User's Manual - Hardware Edition.**

3.6.2 External Wiring of Transistor Output

1. External Wiring of Sink Output Type

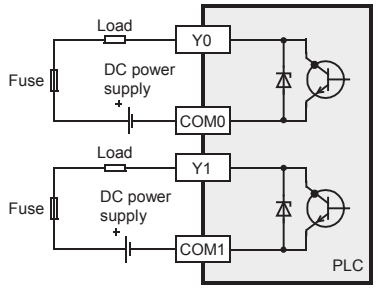

2. External Wiring of Source Output Type

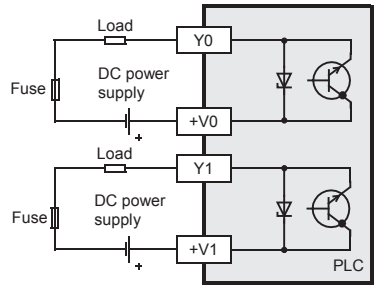

3.6.3 Cautions in external wiring

As for the details of Instructions for connecting input devices, refer to the following manual.

→ **Refer to FX3G Series User's Manual - Hardware Edition.**

Protection circuit for load short-circuits

A short-circuit at a load connected to an output terminal could cause burnout at the output element or the PCB. To prevent this, a protection fuse should be inserted at the output.
Use a load power supply capacity that is at least 2 times larger than the total rated fuse capacity.

Contact protection circuit for inductive loads

When an inductive load is connected, connect a diode (for commutation) in parallel with the load as necessary.
The diode (for commutation) must comply with the following specifications.

Item	Guide
Reverse voltage	5 to 10 times of the load voltage
Forward current	Load current or more

Interlock

Loads, such as contactors for normal and reverse rotations, that must not be turned on simultaneously should have an interlock in the PLC program and an external interlock.

3.7 Triac output specifications and example of external wiring

As for the details of the triac output specifications and external wiring, refer to the following manual.

→ **Refer to FX3G Series User's Manual - Hardware Edition.**

3.7.1 Triac output specifications

Item		Specification
Number of output points	FX2N-16EYS, FX2N-32ES	16 points
Output connecting type		Refer to FX3G Series User's Manual - Hardware Edition
Output form		Triac (SSR)
External power supply		85 to 242V AC
Max. load	Resistance load	0.3A/point(*1)
	Inductive load	15VA/100V AC, 30VA/200V AC
Min. load		0.4VA/100V AC, 1.6VA/200V AC
Open circuit leakage current		1mA/100V AC, 2mA/200V AC
Response time	OFF→ON	1ms or less
	ON→OFF	10ms or less
Circuit insulation		Photo-thyristor insulation
Display of output operation		LED on panel lights when photo-thyristor is driven.

(*1) The total load current of resistance loads per common terminal should be the following value or less.
- 4 output points/common terminal : 0.8A
- 8 output points/common terminal : 0.8A

As for the number of outputs per common terminal, refer to "Chapter 4 interpretation of partition" and the following manual.

→ **Refer to FX3G Series User's Manual - Hardware Edition.**

3.7.2 External Wiring of Triac Output

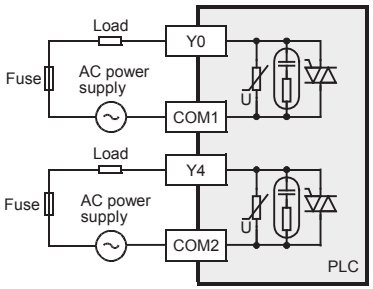

3.7.3 Cautions in external wiring

As for the details of Instructions for connecting input devices, refer to the following manual.

→ **Refer to FX3G Series User's Manual - Hardware Edition.**

Protection circuit for load short-circuits

A short-circuit at a load connected to an output terminal could cause burnout at the output element or the PCB. To prevent this, a protection fuse should be inserted at the output.

Micro current load

The PLC's internal Triac output circuit is equipped with a turn-off C-R absorber. When connecting a very low current load of "0.4VA/100V AC or less, or 1.6VA/200V AC or less", please connect a surge absorber parallel to the load.

Select the rated voltage of a surge absorber that is suitable for the load being used. Refer to the table below for other specifications.

Item	Guide
Static electricity capacity	Approx. 0.1μF
Resistance value	Approx. 100 to 200Ω

Interlock

Loads, such as contactors for normal and reverse rotations, that must not be turned on simultaneously should have an interlock in the PLC program and an external interlock.

4. Terminal block layouts

For details on the terminal block layout, refer to the following manual.

→ **Refer to FX3G Series User's Manual - Hardware Edition.**

Interpretation of partition

The partition of the output terminals (see following figure) indicates the range of the output connected to the same common.

Example: FX3G-40MT/ES

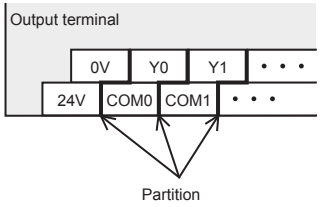

「电器电子产品有害物质限制使用标识要求」的表示方式

产品正常使用终结废弃时，有关电子信息产品的回收、再利用等要遵守各自治体的法律法规的要求。

Note: This symbol mark is for China only.

含有有害10物质的名称，含有量，含有部品

本产品中所含有的有害10物质的名称，含有量，含有部品如下表所示。

产品中有害物质的名称及含信息表

部件名称	有害物质				
	铅 (Pb)	汞 (Hg)	镉 (Cd)	六价铬 (Cr(VI))	多溴联苯 (PBBs)
外壳	○	○	○	○	○
印刷基板	×	○	○	○	○

部件名称	有害物质		
	多溴二苯醚 (PBDEs)	邻苯二甲酸二正丁酯 (DBP)	邻苯二甲酸二异丁酯 (DIBP)
外壳	○	○	○
印刷基板	○	○	○

部件名称	有害物质	
	邻苯二甲酸丁苄酯 (BBP)	邻苯二甲酸二(2-乙基)己酯 (DEHP)
外壳	○	○
印刷基板	○	○

注1 ○:表示该有害物质在该部件所有均质材料中的含量均不超出电器电子产品有害物质限制使用国家标准要求。

×:表示该有害物质至少在该部件的某一均质材料中的含量超出电器电子产品有害物质限制使用国家标准要求。

注2 以上未列出的部件，表明其有害物质含量均不超出电器电子产品有害物质限制使用国家标准要求。

基于中国标准法的参考规格:GB/T15969.2

This manual confers no industrial property rights or any rights of any other kind, nor does it confer any patent licenses. Mitsubishi Electric Corporation cannot be held responsible for any problems involving industrial property rights which may occur as a result of using the contents noted in this manual.

Warranty

Exclusion of loss in opportunity and secondary loss from warranty liability Regardless of the gratis warranty term, Mitsubishi shall not be liable for compensation to:

(1) Damages caused by any cause found not to be the responsibility of Mitsubishi.
(2) Loss in opportunity, lost profits incurred to the user by Failures of Mitsubishi products.
(3) Special damages and secondary damages whether foreseeable or not, compensation for accidents, and compensation for damages to products other than Mitsubishi products.
(4) Replacement by the user, maintenance of on-site equipment, start-up test run and other tasks.

⚠ For safe use

- This product has been manufactured as a general-purpose part for general industries, and has not been designed or manufactured to be incorporated in a device or system used in purposes related to human life.
- Before using the product for special purposes such as nuclear power, electric power, aerospace, medicine or passenger movement vehicles, consult with Mitsubishi Electric.
- This product has been manufactured under strict quality control. However when installing the product where major accidents or losses could occur if the product fails, install appropriate backup or failsafe functions in the system.

MITSUBISHI ELECTRIC CORPORATION

HEAD OFFICE : TOKYO BUILDING, 2-7-3 MARUNOUCHI, CHIYODA-KU, TOKYO 100-8310, JAPAN